Starrett®

PRECISION, QUALITY, INNOVATION

Since 1880

Catalog 33

PRECISION, QUALITY, INNOVATION

Welcome to our new edition, Catalog 33. We remain as dedicated today to the making of great tools for our customers as we were when L.S. Starrett founded the company in 1880. He created a business and a brand that has become synonymous with precision, quality and innovation, backed by unmatched service and support.

We accomplish this by offering application-designed precision tools, saws, and custom solutions that optimize job and process performance. Our confidence hinges over 130 years of experience focusing on your needs and your success. We take great pride in manufacturing long-lasting, easy-to-use tools that provide consistent and reliable performance.

Today, Starrett offers five product categories: Precision Measurement Tools, Metrology Equipment, Granite-based Engineered Solutions, Saw Blades, and Jobsite and Shop Tools.

Whether you need to modify a standard tool, require assistance in selecting the best saw blade for your cutting application, or desire a custom solution for your business, we have the breadth of knowledge to assist you.

We are committed to providing you with complete solutions created for your exact needs. Problem solving is part of what we do every day. If the right tool for your application does not exist, contact us – we would appreciate the opportunity to build it.

D. A. Starrett

President and CEO

MICROMETERS

In the hands of a skilled operator, the precision micrometer is the most accurate hand-held tool available. When close measurements are necessary, the micrometer is the ideal tool for the job because measurement and reading are on the same axis and the anvil end is supported by a strong frame.

19

SLIDE CALIPERS

Our calipers are light, comfortable, easy-to-use, and constructed with features that have made Starrett slide calipers the machinist's first choice for many years.

89

HEIGHT GAGES

Height gages measure the distance from a reference surface, such as a surface plate, to some feature of a part, and can do so with exceptional accuracy. We also offer a comprehensive range of scribes, attachments and accessories for all of your height gaging needs.

107

DEPTH GAGES

We offer a choice of depth products varying in form, complexity, cost and accuracy, from the most accurate depth micrometers (electronic, dial and vernier) to the less complex precise rule gages and combination rule gages.

123

INDICATORS AND GAGES

We offer a variety of each of the major classes: mechanical dial, electronic display, lever style test and back plunger. Indicator requirements are very specific and Starrett offers everything you need: a broad line of each indicator type, an extensive range of accessories to configure and position the gage, and as needed, an indicator-based, custom engineered solution.

133

PRECISION TOOLS

BORE GAGES

Our line of bore gages is extensive, with products available for a broad range of applications. Some are available with interchangeable measuring heads for different diameters or extensions for depth. They can have electronic displays (some with output), micrometer-type vernier scales or a dial (similar to an indicator).

203

TOOL SETS

We offer a selection of tool sets that combine basic tools such as a 0-1" micrometer, 0-6" caliper and a few other fundamental measuring tools in a single set for apprentices or beginners. Some are designed for the requirements of a type of application or are industry-specific.

221

DATA COLLECTION SYSTEMS

DataSure® Wireless Data Collection is a state-of-the-art system for real-time collection and recording of measurement data. From measurement to input, it reduces steps, saves time and can completely eliminate error in the data collection process. We also offer several newer technology products for wire-based data collection, SmartCable for single tools and the 4-Port Gage Multiplexer.

223

GAGE AMPLIFIERS, HARDNESS AND SURFACE TESTERS

We have added to and updated our tester line significantly in recent years. Our bench hardness testers range from relatively simple analog models to electronic versions with broad capabilities. We also offer several portable hardness testers, two new surface roughness testers, an electronic durometer, an ultrasonic thickness gage and a full range of test blocks and accessories.

231

SPECIAL GAGING

Standing out from other precision tool providers through our willingness to work directly with customers to design and manufacture custom tools for applications that standard products cannot perform. For over 50 years, we have provided solutions to industries including energy, aerospace, automotive, food packaging, high-technology plastics, medical components, and to NASA and other government agencies.

251

SQUARES

Invented by our founder, the combination square was our first product and today, our brand is considered to be the best available. This section offers a range of high quality solid squares, tri-squares specialty products and accessories that is especially broad and deep.

265

PRECISION RULES, STRAIGHT EDGES AND PARALLELS

Our comprehensive line offers a choice of temper, 10 English and 8 metric graduation styles with several width, thickness and length options and a full range of accessories and holders. Straight edges and parallels made with the same care and accuracy as our precision rules are also available.

283

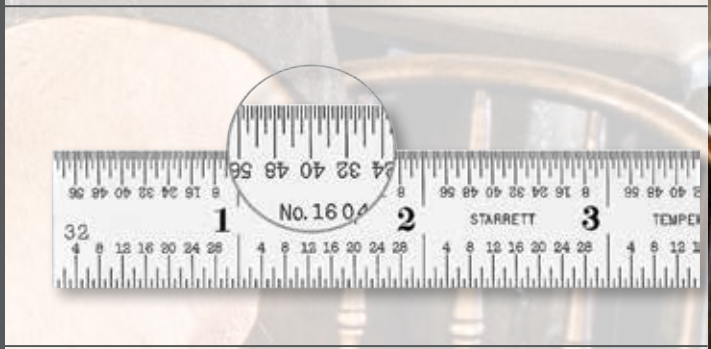

PROTRACTORS AND ANGLE MEASUREMENT

We offer a variety of tools with a sharply graduated 180° scales intersected by a movable blade, a bevel protractor, protractor/depth gages and special drill point gage. We also have available an indicator protractor head for use with custom engineered applications.

305

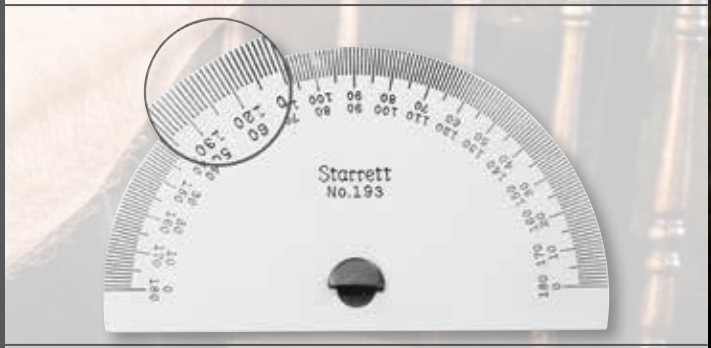

CALIPERS, DIVIDERS AND TRAMMELS

Manufacturing calipers and dividers since about 1890, we continue to build them with the same level of quality today. Even with many more options available today, these tools are still the best choice for many measurement transfer, scribing and other jobs. We also offer trammel heads, divider points and attachments.

311

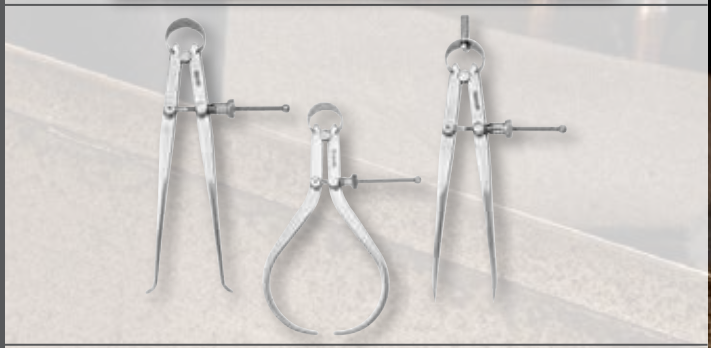

HOLE AND SLOT GAGES

We offer several varieties of small hole gage sets as well as telescoping gages for larger holes. Our taper gages are inserted into a hole or slot, with the diameter determined by the reading on the tool's etched scale.

319

PRECISION TOOLS

FIXED GAGE STANDARDS

Fixed Gage Standards include a comprehensive choice of standard gages that quickly check dimensions on a variety of workpieces. They are very useful for in-process and final inspection. Products include pin gages, drill gages, sheet and wire gages, center gages, screw pitch gages, radius gages, ball and diameter gages, angle gages, thickness gages and feeler stock.

325

PRECISION SHOP TOOLS

This section offers quality tools that do not measure, but are needed frequently in manufacturing. Tools such as work positioning tools, scribers, punches, vises and lubricant are an integral part of any shop or manufacturing industry.

341

MACHINISTS' LEVELS

We offer a selection of machinists' levels to suit a variety of precision work typically required in industry. Our machinists' levels are manufactured with ground surfaces designed specifically for machine shop and tool room use.

369

STARRETT-WEBBER GAGE BLOCKS

We offer high-grade steel gage blocks for shop floor use, longer-lasting and non-corroding ceramic blocks. Top-of-the-line croblox® Chromium Carbide, are very stable, non-corrosive and have excellent wringability. A variety of sets are available in square- and rectangular-block versions. We also offer individual replacement blocks and a range of related accessories.

375

PRECISION GRANITE PRODUCTS

Products and services range from standard surface plates and metrology accessories to engineering collaboration for unique solutions and complex assemblies. Our skilled technicians build your product in our state-of-the-art, environmentally controlled manufacturing facility.

409

VISION SYSTEMS

Video-based measurement systems combine high-resolution images, powerful-intuitive software and precision mechanical platforms to deliver superb accuracy and repeatable measurement results for a wide range of precision measurement applications

423

VIDEO INSPECTION SYTEMS

The KineMic™ video based microscopes are a family of versatile and affordable inspection and measurement systems.

445

OPTICAL COMPARATORS

Optical comparators provide a time tested, cost effective solution for non-contact measurement. Optical comparators are used for an exceptionally wide range of dimensional inspection and measurement applications.

449

SOFTWARE

Starrett offers multiple software and metrology readout solutions to meet the needs of Quality Departments, Engineering and Manufacturing alike.

475

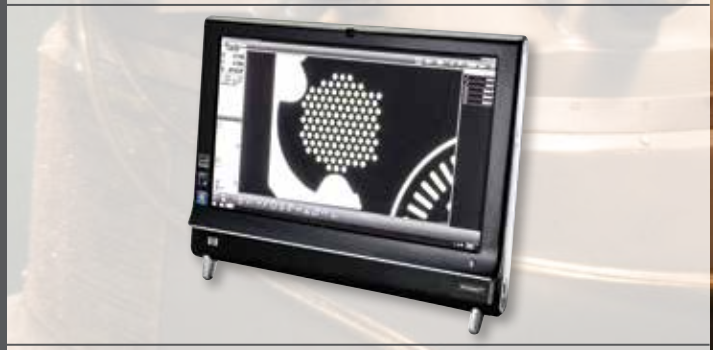

MATERIAL TESTING AND FORCE MEASUREMENT

Turnkey system solutions for material testing, force analysis and force measurement. Our systems distinguish themselves from the competition by making it easy to create and perform a test, and manage test results. We offer a full range of test frames, software, load cell sensors, test fixtures and more.

481

PRECISION TOOLS

LASER MEASUREMENT

We offer the Profile360 for in-line measurement of rubber and plastic extrusions, roll-formed metal profiles, pipe, and shaped wire profiles. We have a suite of tire industry products for in-process and off-line measurement in tread extrusion, calendering, tire building, bulge and depression measurement, and cured tire inspection.

527

PRECISION GROUND FLAT STOCK AND DRILL ROD

We stock a full range of sizes in O1, A2, D2, A6, W1 and Low Carbon Steel. Specials can be produced in as little as 5 days at our North Carolina manufacturing facility. Starrett Ground Flat Stock and Drill Rod is of the highest quality, in fact we use it in the production of many of our own Precision Measuring Tools.

549

VOCATIONAL AND EDUCATIONAL

Our educational literature is used as a resource in the machinist's shop, the classroom or for the everyday end-user. It ranges from posters that can be hung in the workshop to booklets that explain how to utilize your Starrett tools. Pocket cards and memo pads are also available for those who need precise measurements while on the job or in the classroom.

571

REFERENCE TABLES

577

INDEX

593

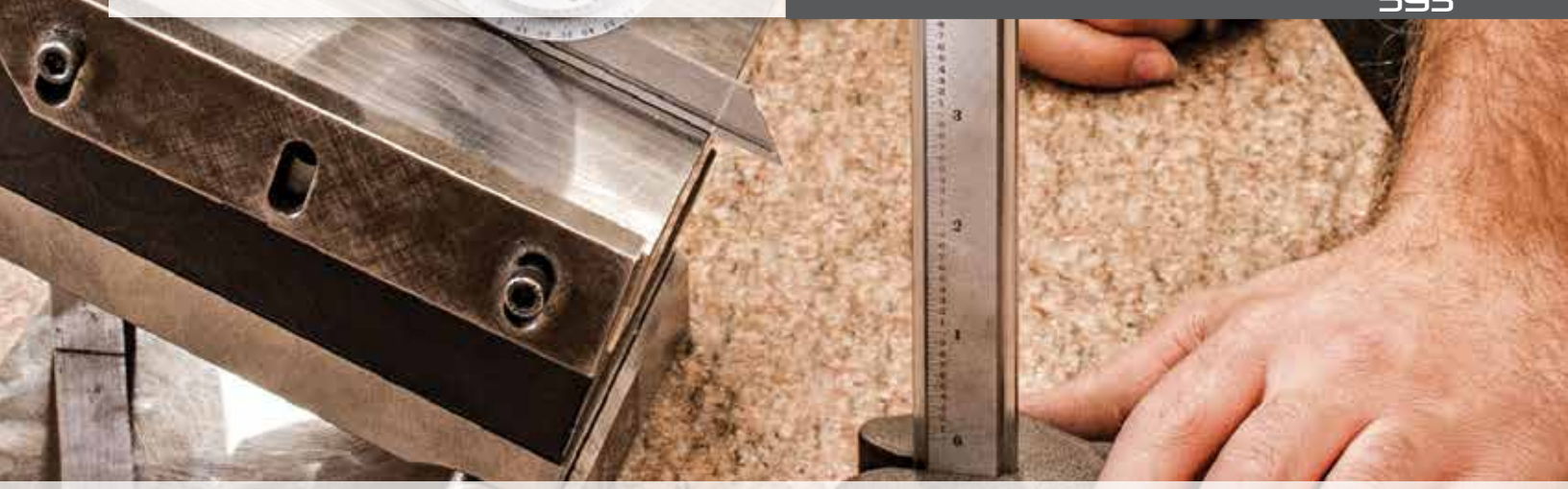

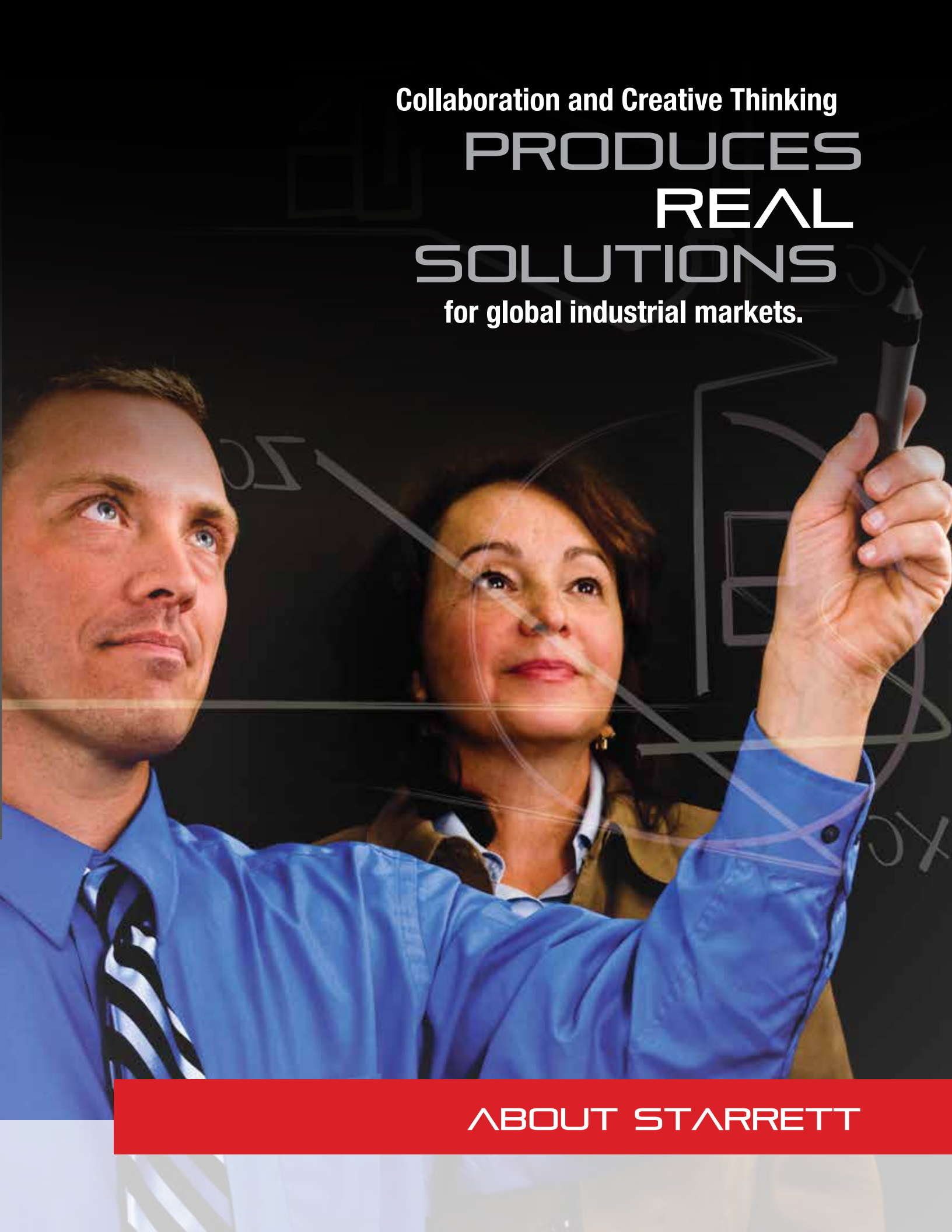
Collaboration and Creative Thinking
PRODUCES
REAL
SOLUTIONS
for global industrial markets.
ABOUT STARRETT

Factories Around the World

1-Athol, Massachusetts, USA
L.S. STARRETT COMPANY WORLD HEADQUARTERS

2-Laguna Hills, California, USA

3-Waite Park, Minnesota, USA

4-Cleveland, Ohio, USA

A Global Manufacturer for Over Half a Century

Starrett's success as a global manufacturer began in the 1950's with the establishment of facilities in Brazil and the United Kingdom. Today, Starrett has nine manufacturing locations worldwide: Brazil, The U.K., China, and six in the United States.

Most of the products in this catalog are made at a Starrett U.S. facility. The rest are sourced from one of our global locations.

Regardless of the country of origin, the Starrett name is your assurance of unmatched precision and quality. After more than 130 years, Starrett remains "The World's Greatest Toolmaker" – setting the continuing standard of excellence.

5-Mount Airy, North Carolina, USA

6-Columbus, Georgia, USA

7-Itu, São Paulo, Brazil

8-Jedburgh, Scotland

9-Suzhou, China

Contact Information

Corporate Headquarters and Main Factory

THE L.S. STARRETT COMPANY
121 Crescent Street
Athol, MA 01331-1915 U.S.A.
Telephone: (978) 249-3551
Fax: (978) 249-8495

U.S. Divisions

STARRETT SAW DIVISION
1372 Boggs Drive
P.O. Box 1268
Mount Airy, NC 27030-1268
Telephone: (336) 789-5141
Fax: (336) 789-8160

STARRETT METROLOGY DIVISION
Starrett Kinemetric Engineering, Inc.
26052 Merit Circle, Suite 103
Laguna Hills, CA 92653
Telephone: (949) 348-1213
Fax: (949) 582-8040

STARRETT CONSTRUCTION DIVISION
4130 Faber Place Drive, Suite 105
N. Charleston, SC 29405

STARRETT WEBBER GAGE DIVISION
24500 Detroit Road
Cleveland, OH 44145-2579
Telephone: (440) 835-0001
Fax: (440) 892-9555

STARRETT GRANITE DIVISION
Starrett Tru-Stone Technologies
P. O. Box 430
1101 Prosper Drive
Waite Park, MN 56387
Telephone: (320) 251-7171
Fax: (320) 259-5073

STARRETT LASER MEASUREMENT DIVISION
Starrett-Bytewise Measurement Systems
1150 Brookstone Centre Pkwy.
Columbus, GA 31904
Telephone: (706) 323-5142

Industrial Distribution

Ample stocks of Starrett products to meet your needs are maintained by leading industrial distributors worldwide.

Your Starrett distributors have a thorough knowledge of the Starrett line and can help you with your inquires. They are readily available to provide you with quick and reliable support. Be sure to make use of their valuable services.

International Locations

BRAZIL
Starrett Indústria e Comércio Ltda.
Itu, São Paulo, Brazil
Telephone: 55 11 2118-8000
Fax: 55 11 2118-8003

SCOTLAND
The L.S. Starrett Company Ltd.
Starrett Precision Optical Ltd.
Jedburgh, Scotland
Telephone: 44 (0) 1835 863501
Fax: 44 (0) 1835 863018

China
Starrett Tools (Suzhou) Company Limited
Suzhou, China
Telephone: 86 512 6741940
Fax: 86 512 67415697

Starrett (Asia) Pte Ltd. Singapore
Singapore
Telephone: +65 6365 1088
Fax: +65 6365 5125
starrett_asia@starrett.com.sg

Branch Offices and Warehouses

SALTILLO MEXICO
The L.S. Starrett Company
of Mexico S. de R.L. de C.V.
Saltillo, Coah, Mexico
Telephone: (844) 432-46-60
Fax: (844) 432-46-61

ARGENTINA
Starrett Argentina S.A.
Buenos Aires, Argentina
Telephone: 54 11 4756-6222
Fax: 54 11 4756-1144

GERMANY
Starrett GmbH
Schmitten/Taunus, Germany
Telephone: 49 6084 959510
Fax: 49 6084 959511

AUSTRALIA
The L.S. Starrett Company of Australia Pty. Ltd.
Seven Hills, Australia
Telephone: 61 2 9620 6944
Fax: 61 2 9620 6988

Precision

At Starrett, we understand precision. For generations, the precision that we build into our products has allowed our customers to ensure the quality of their products. Precision is something we take very seriously.

Primary Standards

To ensure accuracy, manufacturers must enforce strict quality control processes. This starts with applying primary standards for measurement and inspection. This will ultimately lead to consistent, reliable gaging results.

Precision gage blocks are the primary standards vital to dimensional quality control in the manufacture of interchangeable parts. These blocks are used for calibrating precision measuring tools and for setting numerous comparative type gages.

However, even gage blocks are held to their own level of higher standards: Grand Master Blocks.

Accurate Reference Surfaces

Every linear measurement depends on an accurate reference surface from which final dimensions are taken.

Precision Granite Surface Plates provide the best reference plane for work inspection and layout prior to machining.

They are also ideal bases for making height measurements and gaging surfaces, parallelism, etc. A high degree of flatness, stability, overall quality and workmanship also make them ideal bases for mounting sophisticated mechanical, electronic and optical gaging systems.

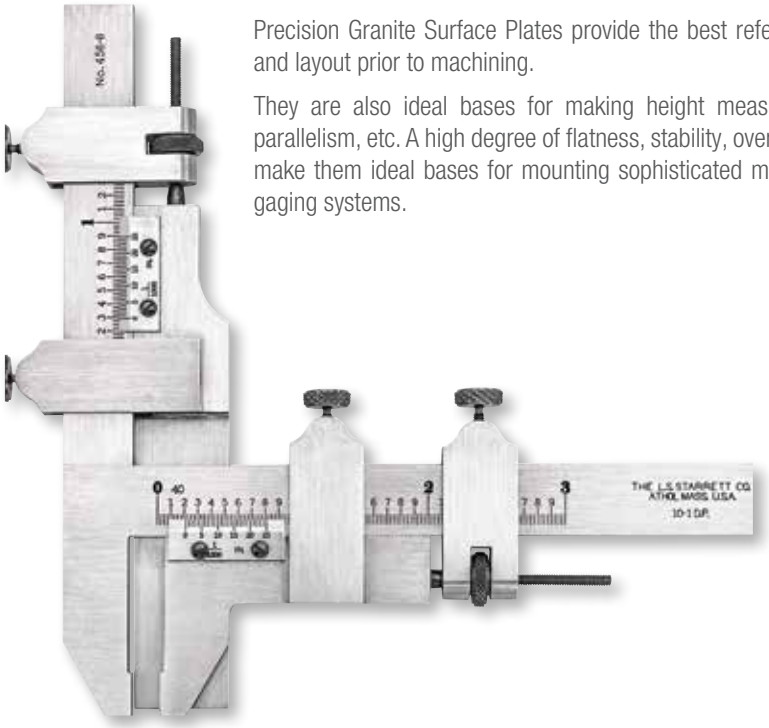

Accuracy

Starrett precision measuring tool accuracies are based on their traceability through our grand master gage blocks as certified by the National Institute of Standards and Technology (NIST).

Worldwide, no one else has produced the accuracy and stability of Starrett-Webber croblox® Grand Masters.

They were produced in 1955 out of chromium carbide material to an accuracy within one millionth of an inch (.0000254mm) and have been checked periodically by the National Bureau of Standards and the National Institute of Standards and Technology (NIST). They have remained stable over this period.

Quality

Starrett precision measuring products are inspected for accuracy with standards traceable to our grand master gage blocks.

After a period of use, precision measuring tools require regular preventative maintenance, periodic calibration and, sometimes, repair.

Starrett offers calibration services at several of our facilities, each with different emphasis, capabilities and certificates as detailed below.

Calibration and Repair

STARRETT TOOLS AND GAGES – ATHOL, MA

- Calibration of Starrett Precision Tools
- Repair, refurbishing, and rebuilding of your Starrett tools by the same craftsmen who originally made them
- Accredited by A2LA in accordance with ANSI/NCSL Z540-1 and ISO/IEC 17025

A2LA ACCREDITED
Cert. No. 760.01

*STARRETT WEBBER GAGE DIVISION – CLEVELAND, OH

- Accredited calibrations of Linear Gage Blocks, Webber Height Gages and Standard Reference Bars, Angle Gage Blocks, True Squares, Optical Cubes, Optical Polygons and Optical Flats
- Accredited by NVLAP in accordance with ANSI/NCSL Z540-1 and ISO/IEC 17025*
- Calibrations also performed in accordance with ISO 10012-1 and former MIL-STD-45662A

NVLAP
Administered by N.I.S.T.
Lab Code 200038-0

*STARRETT GRANITE DIVISION – WAITE PARK, MN

- Calibration of granite surface plates, granite parallels, granite straight edges, granite tri-squares, granite angle plates and granite squares.
- Surface plate, granite metrology and accessory resurfacing
- Starrett Granite Surface Plates meet or exceed U.S. Federal Specification GGG-P-463c
- NIST-traceable calibration certificate provided that is ISO/IEC 17025* compliant
- ISO 9001:2000 certified and A2LA accredited per the ISO/IEC 17025* standard

A2LA ACCREDITED
Cert. No. 200.01

STARRETT METROLOGY DIVISION – LAGUNA HILLS, CA

- Factory or field calibration and repairs of Optical Comparator and Vision Systems performed by our factory trained experts
- First generation NIST traceable documentation for all calibration artifacts and standards

*STARRETT CALIBRATION SERVICES™ – DUNCAN, SC

321 Tucapau Road, PO Box 537, Duncan, SC 29334 | Tel.: 864-433-8407

- Fast, economical calibration for all major brands
- Repair of all major brands with parts in stock
- Accredited by A2LA in accordance with ANSI/NCSL Z540-1, and ISO/IEC 17025*

A2LA ACCREDITED
Cert. No. 1387.02

*Accreditations are site-specific and tool-specific. The Scope of Accreditation is available upon request to each location. Specifications and Certifications are subject to change.

Calibration Certificate

(AVAILABLE BY REQUEST)

The Calibration Certificate includes the information that is on the SLC and the actual readings taken during the calibration of that tool. The certificate includes an environmental control statement, actual before and after data, standards used to perform calibration, applicable NIST test number, and uncertainty statement. The certificate conforms to the requirements of ANSI/NCSL Z540-1, ISO/IEC 17025 and ISO Guide 25.

Standard Letter of Certification (SLC)

The Standard Letter of Certification certifies that the listed tool is a product of The L.S. Starrett Company and meets all applicable federal or manufacturing specifications. It has a unique serial number, tolerance parameter, and traceability to The National Institute of Standards and Technology (NIST).

Many of our tools are available with a redemption card for a Standard Letter of Certification. Their catalog numbers have the letters "W/SLC".

Innovation

New Products

Product and technology innovation has been at the core of The L. S. Starrett Company since our inception. The restless, creative energy of our founder, dedicated to "continuous improvement" long before that phrase came into common usage, is as much a part of our company in the 21st century as it was in the 19th.

The table below lists products we have added to our Precision Tool Catalog since its last printing.

Beyond catalog products, we devote significant resources to developing highly innovative, application-focused solutions, as described on the following pages.

New Product Summary	Page
T444.1 Outside Micrometers	31
430 Indicating Micrometers	73
EC799 Electronic Micrometers	91
3202 Dial Calipers	98
3754 Electronic Height Gages	112
258 Digi-Check™ Electronic Height Gage	118
3259-AC Digital Height Gage Scriber Carrier Holder	121
3809, 3809 Dial Test Indicators	140
3908, 3909 Dial Test Indicators	140
2900 Electronic Indicators	170
2700 Backlight Indicators	171
2700 Group 1 Digital Indicators	174
3900 Electronic Indicators	174
3670 Dial Indicator Stands	175
781BXT AccuBore® Electronic Bore Gages with Output	204
770BXT Electronic Bore Gages with IP67 Protection (with output)	207
3089 Bore Gage Setter	213
RMS Remote Display and Probes	233
3814 Digital Replacement for Bench Hardness Tester	237
SR160 Surface Roughness Testers and Accessories	245
C636MEC-500 Steel Rule	296
Waterless Surface Plate Cleaner Wipes	421
HDV500 Digital Video Comparator	440
VB300 Vertical Bench-Top Optical Comparator	456
TOV2 Optical Comparator Telecentric Video Adapter	471
L1 Systems	500
FMM Digital Force Testers	505
Digital Force Gages	516
DFG Digital Force Controller	517
MTL Manual Testers	520
MTH Manual Testers	521
Profile360™ - G4	528
Off-Line Profilometer 3D (3DP)	540
Tire360	544
GEO-360	545

T444.1XRL-1

EC799B-6/150

3202-6

DFC-100

HDV500

3900-5

2700-800

3754-12/300

Tire360

FMM-110X

Granite Surface Plate Cleaner Wipes

Innovation

Application-Focused Custom Solutions

WHEN YOU HAVE A SPECIAL MEASUREMENT PROBLEM, WE WILL HELP YOU FIND THE SOLUTION.

One way Starrett stands out from other precision tool providers is our willingness to work directly with customers to develop custom tools.

Over 50 years, Starrett Special Gage has developed and built thousands of innovative custom measuring solutions. Customers include the energy, aerospace, automotive, food packaging, high-technology plastics and medical components industries as well as NASA and the military.

Even with our broad catalog of products, some jobs require a custom solution. After we determine that no "off-the-shelf" product is applicable, our engineers begin a dialog with the customer to develop a custom tool for the specific task. Through a process of consultation, design, prototype machining and testing, we develop a specification to the full satisfaction of our customer.

Similarly, the Starrett Metrology and Starrett Tru-Stone Granite Technologies Divisions work interactively with customers to create custom solutions utilizing their specific expertise and technologies.

At the conclusion of the process, something that could not be measured is measured, and a difficult problem is transformed into an innovative, often elegant solution.

THE CUSTOM SOLUTIONS DEVELOPMENT PROCESS

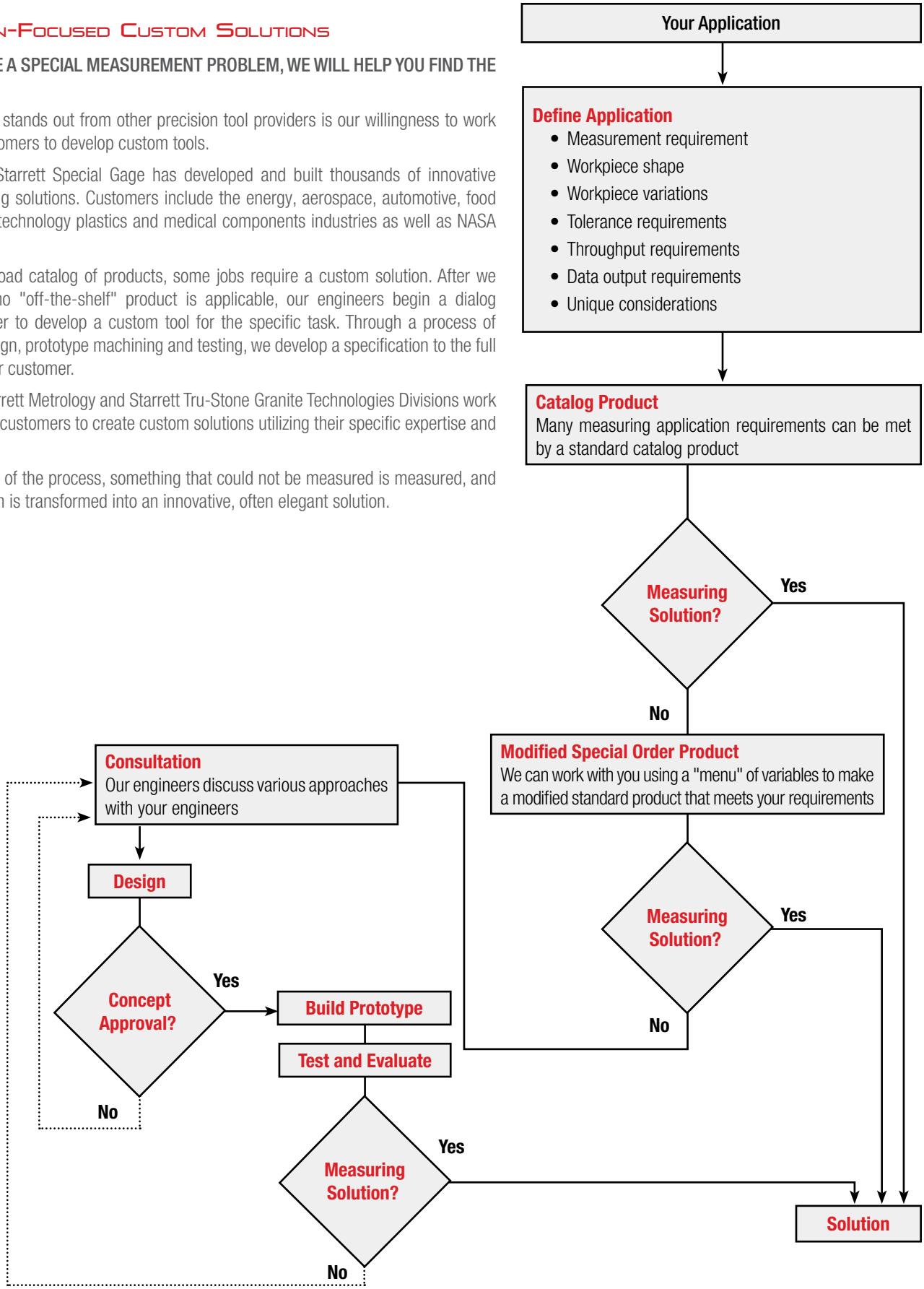

Custom Engineered Solutions

Handheld Tools and Gages

An interactive process between customer and Starrett engineering staffs created a gage that measures the diameter of hot steel flat stock while in the heat treatment process. An accurate measurement takes only two seconds of contact, reducing radiant heat transfer and part spoilage.

Its electronic indicator locks the reading in the display for safe reading and is accurate to within ±.003".

Engineered Metrology Systems

This application was custom developed with vision and touch probe sensors. As is the case with many recent systems, two or even three sensors are part of the custom solution.

The Starrett Metrology Division works closely with customers to find solutions for complex applications on a regular basis. Their expertise is as important to the solution as the excellence of our system hardware.

Custom Gage Fixtures

We have worked with many customers to develop a gage to measure a specific food container, some with lids that must fit precisely – not too tight or loose. These containers are a perfect example of something that defies measurement with a standard tool.

The gage below uses pneumatics to withdraw probes for fast, easy and accurate placement and unloading.

Granite-Based Engineered Solutions

A medical devices manufacturer could not reliably measure a moving tube on a complex 7-axis laser micro machining system because of persistent vibration.

After extensive design consultation with our Starrett Granite Division, the vibration-dampening attributes of granite stabilized beam delivery, allowing measurement of the tubes at a molecular level.

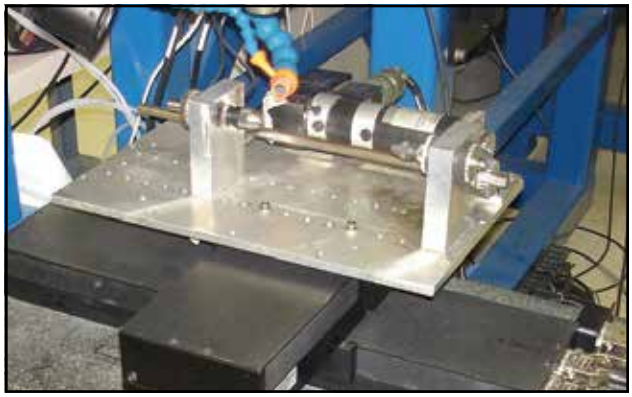

General Information

Specifications and Availability

The information and specifications in this catalog were accurate at the time of publication. Specifications and availability of products, however, are subject to change without notice.

Quality Assurance

Starrett tools are made to the highest standard of quality and workmanship. We want every tool in the hands of our customers to be accurate and satisfactory. If any tool is found not to be of Starrett quality, please contact our customer service department to arrange a return of that tool. Any tool proved to be defective in material or workmanship will, at our discretion, be repaired or replaced at no Charge.

Please note that we cannot replace or give credit for tools that have been improperly used, stamped or mutilated, or tools that have been altered or repaired by personnel not authorized by The L.S. Starrett Company. We will be pleased to quote a price to repair such tools.

Accuracy

At the time of manufacture, Starrett precision measuring tools meet or exceed accuracy and performance requirements of national and international standards, and are traceable to the United States National Institute of Standards and Technology.

Starrett Value

No manufacturer's precision tools are guaranteed to work for life, regardless of the use or abuse they receive. It is worthy to note, however, that we at The L.S. Starrett Company regularly service and repair our precision measuring tools that have been passed from generation to generation. You can count on Starrett for full value.

Repair and Calibration

We offer expert repair and calibration services at several of our facilities as noted on previous pages. Please contact the appropriate facility to arrange for these services.

Custom Solutions and Special Orders

As noted, we have built thousands of special tools to meet the unique needs of our customers, and we welcome the opportunity to work with you to meet your special requirements. Please contact our Special Gage Division at (978) 249-3551, or contact the international location that is your supplier.

How and Where to Order Starrett Products

Starrett tools are sold through authorized distributors. Orders should be placed with a Starrett distributor in your area. Please check our website or contact us for assistance in locating your nearest distributor.

Please note that we do not list distributors for our Metrology Products (Vision Systems and Optical Comparators) due to their technically complex and application-specific nature. Please contact our Metrology Division in Laguna Hills, CA at (949) 348-1213 for assistance in finding the best distributor for your application, product and location.

Product Price

Please contact your distributor for prices of Starrett products. In most cases, we do not quote prices directly to customers. From time to time, we offer promotions with stated prices valid for a defined period. Such promotions are listed on our website and detailed in printed promotional material. If you require help finding a participating distributor, please contact us.

MICROMETERS

Starrett Reliable Precision Micrometer Design and Manufacturing Features

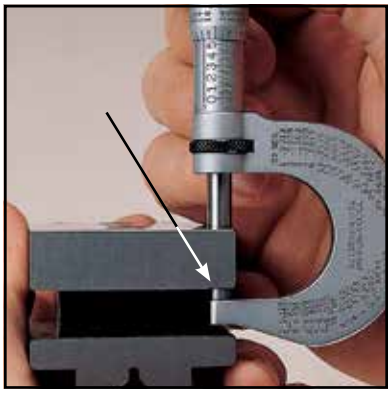

Tapered Frame – a Starrett original feature – permits measurements in narrow slots and tight places. Standard with Starrett.

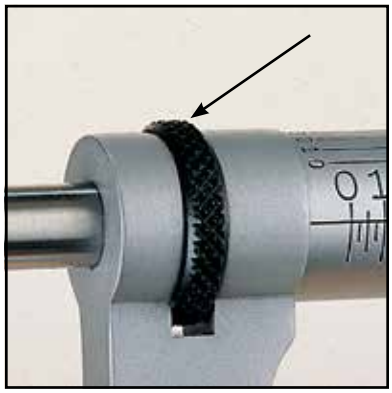

Ring-type lock nut convenient to use. Permits locking of spindle at any reading.

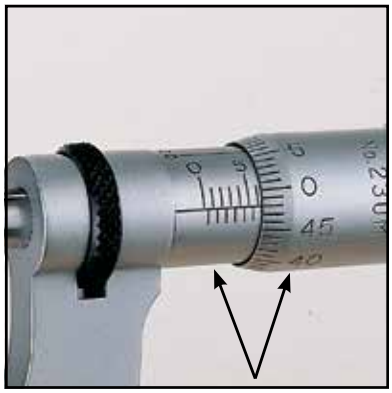

Easy to read with distinct black figures against satin-chrome finish.

Staggered graduations, advanced design, a Starrett original feature. Quick reading figures on inch reading micrometers. Every graduation numbered for quick, positive identification. Easy to read with distinct black figures against satin-chrome finish.

Friction thimble, smooth uniform pressure independent of "feel."

Ratchet stop/speeder for consistent measurements and to speed opening or closing of tool.

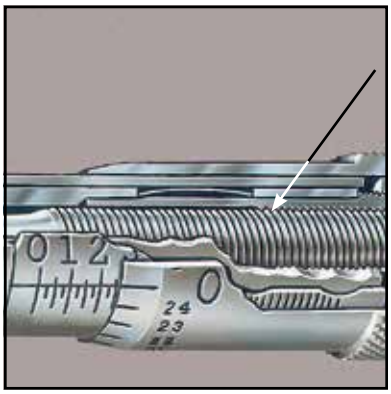

Extra Hard Threads with Extreme Lead Accuracy. Special high carbon steel gives harder threads which are hardened, stabilized, and precision ground from the solid to ensure long and accurate life.

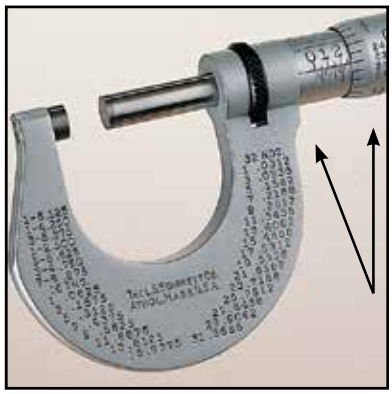

Balanced design; plus no-glare satin chrome finish makes the tool easy to hold and read, as well as resistant to stains, corrosion and wear.

Micro-Lapped "Mirror" Finish on the measuring faces – a Starrett original feature that ensures more accurate measurements. Available with carbide faces or hardened, high-carbon steel faces.

Micrometer Quality and Accuracy

Product quality and accuracy cannot be valid unless referenced to a quality and accuracy standard.

All Starrett precision measuring tool standards meet or exceed accuracy and performance specifications of national and international standards and are traceable to the National Institute of Standards and Technology.

The Starrett Company does not rely on statistical sampling inspection. Every precision measuring tool is individually inspected.

All Starrett micrometers have the same accurate heads as outlined in the chart. Inaccuracies because of size can be minimized if the tools are set accurately to standard, and measurements are carried out in a similar position with similar pressure.

How to Adjust Starrett Micrometers

Adjustments to Starrett Micrometers are rarely needed; however, if it becomes necessary, they can be readily adjusted in two easy operations as follows:

1. If any play should develop in the spindle screw threads due to wear of the spindle nut after long use, first back off the thimble, insert the spanner wrench in the slot of the adjusting nut and tighten just enough to eliminate play. Illustration shows how easily this is done.

2. After carefully cleaning all dirt or grit from the measuring faces of anvil and spindle, bring them together and insert the spanner wrench in the small slot of the sleeve. Then turn the sleeve until the line on the sleeve coincides with the zero line on the thimble as shown.

Starrett Micrometer Accuracy Standards (Unless Otherwise Noted on the Catalog Page)

Type	Range	Readout	Accuracy
Mechanical	1"	.001"	±.0001"
	1"	.0001"	±.00005"
	25mm	0.01mm	±0.002mm
	25mm	0.001mm	±0.002mm
Electronic	1"	.00005"	±.0001"
	25mm	0.001mm	±0.002mm

Key to Starrett Micrometer Numbering System

Key to Starrett Micrometer Numbering System	
Prefixes	
R	Reverse Reading
S	Micrometer Set
T	.0001" Reading
V	0.001mm or 0.002mm Reading, as specified
Suffixes	
F	Friction Thimble
L	Lock Nut
M	Metric
N	Non-Rotating
P	Plain
R	Ratchet Stop
S	Speeder
TN	Threaded Hub and Check Nut
W/SLC	Standard Letter of Certification
X	Micro-lapped Carbide Measuring Faces
Z	With Case
ZZ	Case Only

Measuring Tips from Our Experience

- Most obvious to everyone is to keep the work to be measured and the micrometer anvil and spindle faces clean.
- For very fine measurements, the micrometer should be set to zero or to a standard by your "feel", by the friction thimble, or by the ratchet, whichever you will be using.
- The most popular micrometer option has been the ratchet speeder because it does three things well: it speeds opening and closing, it applies uniform pressure from the ratchet, and it allows for using the thimble for individual "feel".
- The speeder is helpful because it takes forty turns to cover the range of a typical English-reading tool and fifty turns to cover the range of a metric-reading tool.
- Large micrometers especially should be set to a standard in the same approximate position in which they will be used, that is, vertical or horizontal, to minimize any frame flexure influence.
- Too much speed in approaching the work will result in an inaccurate measurement.
- If the micrometer has been set to a flat standard, you can get approximately .0001" (0.0025mm) difference when measuring over a round because the same pressure is being applied to a point or line contact.
- Carbide or hardened steel measuring faces are a matter of choice. Carbide wears longer but many craftsmen think they get a better "feel" with highly finished steel measuring surfaces.
- Insulating pads on micrometers are a matter of personal preference. With the Starrett balanced micrometer design, there is no need for insulation. Insulation from hand heat is usually more beneficial on long sections, such as end measuring rods.

How to Read a Starrett Micrometer

Graduated in Thousandths of an Inch

.001"

The pitch of the screw thread on the spindle is 40 threads per inch. One revolution of the thimble advances the spindle face toward or away from the anvil face precisely 1/40" or .025 inches.

The reading line on the sleeve is divided into 40 equal parts by vertical lines that correspond to the number of threads on the spindle. Therefore, each vertical line designates 1/40" or .025 inches. Lines vary in length for easy reading. Every fourth line, which is longer than the others, designates a hundred thousandth. For example: the line marked "1" represents .100" and the line marked "2" represents .200", etc.

The beveled edge of the thimble is divided into 25 equal parts with each line representing .001" and every line numbered consecutively. Rotating the thimble from one of these lines to the next moves the spindle longitudinally 1/25 of .025", or .001". Rotating two divisions represents .002", etc. Twenty-five divisions indicate a complete revolution of .025" or 1/40 of an inch.

To read the micrometer in thousandths, multiply the number of vertical divisions visible on the sleeve by .025", and to this add the number of thousandths indicated by the line on the thimble which coincides with the reading line on the sleeve.

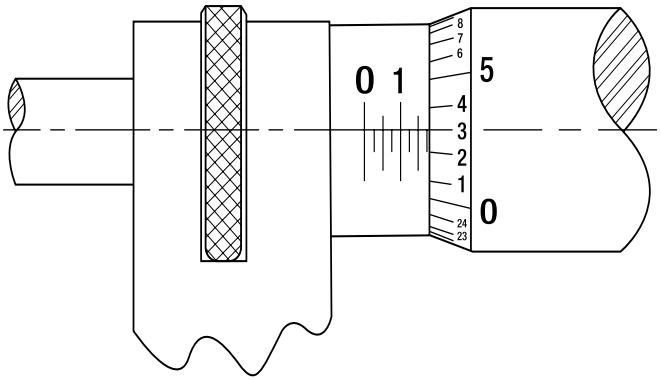

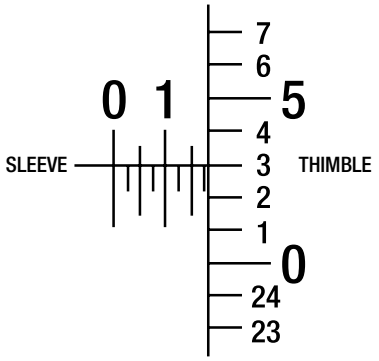

Reading .178"

EXAMPLE:

The "1" line on sleeve is visible, representing ..... .100"

There are 3 additional lines visible, each representing .025"; 3 x .025"..... = .075

Line "3" on the thimble coincides with the reading line on the sleeve, each line representing .001"; 3 x .001"..... . = .003"

The micrometer reading is ..... 178"

Graduated in Ten-Thousandths of an Inch

.0001"

Starrett micrometers graduated in ten-thousandths of an inch read like micrometers graduated in thousandths, except that an additional reading in ten-thousandths is obtained from a vernier scale on the sleeve.

The vernier consists of ten divisions on the sleeve, which occupy the same space as nine divisions on the thimble (Fig. B). Therefore, the difference between the width of one of the ten spaces on the vernier and one of the nine spaces on the thimble is one-tenth of a division on the thimble, or one ten-thousandth (.0001").

To read a ten-thousandths micrometer, first obtain the thousandths reading, then see which of the lines on the vernier coincides with a line on the thimble. If it is the line marked "1" on the sleeve, add one ten-thousandth, if it is the line marked "2", add two ten-thousandths, etc.

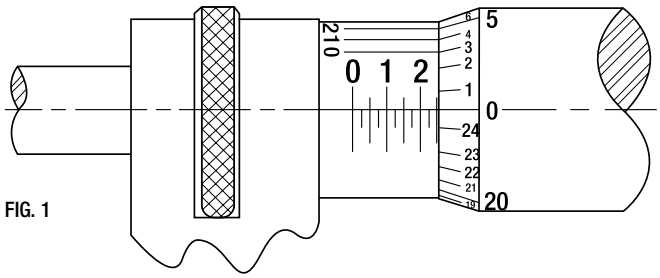

FIG. 1

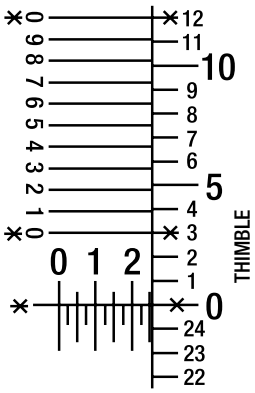

SLEEVE
FIG. B
Reading .2500"

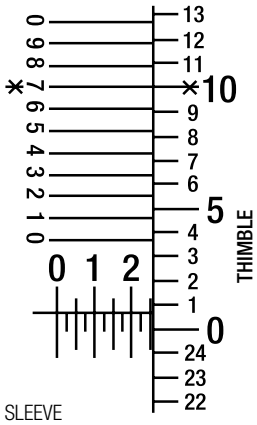

SLEEVE
FIG. C
Reading .2507"

FIGURE C – READING .2507"

The "2" line on sleeve is visible, representing ..... .200"

There are two additional lines visible,each representing .025" ..... .050"

The reading line on the sleeve lies between the "0" and "1" on the thimble indicating that a vernier reading must be added ..... ----

The "7" line is the only line on the vernier that coincides with a line on the thimble, representing 7 x .0001" ..... = .0007"

The micrometer reading is..... .2507"

Graduated in Hundredths of a Millimeter

0.01MM

The screw head pitch is one-half millimeter (0.5mm). One revolution of the thimble advances the spindle face toward or away from the anvil face precisely 0.5mm.

The reading line on the sleeve is graduated above the line in millimeters (1.0mm) with every fifth millimeter being numbered. Each millimeter is also divided in half (0.5mm) below the reading line. Two revolutions of the thimble to advances the spindle 1.0mm.

The beveled edge of the thimble is divided into fifty equal parts, with each line representing 0.01mm and every fifth line being numbered. Rotating the thimble from one of these lines to the next moves the spindle longitudinally 0.01mm; rotating two divisions represents 0.02mm, etc.

To read the micrometer, add the number of millimeters and half-millimeters visible on the sleeve to the number of hundredths of a millimeter indicated by the thimble graduation indicated by the reading line.

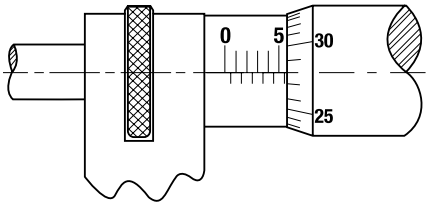

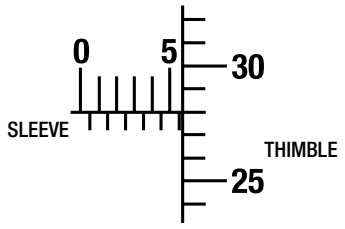

READING 5.78mm

EXAMPLE:

The 5mm sleeve graduation is visible..... 5.00mm

One additional 0.5mm line is visible on the sleeve..... 0.50mm

Line 28 on the thimble coincides with the reading line on the sleeve, so 28 x 0.01mm..... = 0.28mm

The micrometer reading is.....5.78mm

Graduated in Two-Thousandths of a Millimeter

0.002MM

Metric vernier micrometers graduated in 0.002mm are used like those graduated in hundredths of a millimeter (0.01mm), except that an additional reading in two-thousandths of a millimeter (0.002mm) is obtained from a vernier scale on the sleeve.

The vernier consists of five divisions on the sleeve, which occupy the same space as nine divisions on the thimble (Fig. B). Therefore, the difference between the width of one of the five spaces on the vernier and one of the nine spaces on the thimble is one-fifth or two-tenths of a division on the thimble, or two-thousandths (0.002mm).

To read a 0.002mm micrometer, first obtain the hundredth of a millimeter (0.01mm) reading, then see which of the lines on the vernier coincides with a line on the thimble. If it is the line marked "2" add 0.002mm, if it is the line marked "4" add 0.004mm, etc.

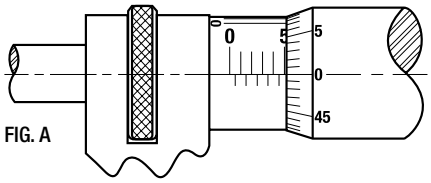

FIG. A

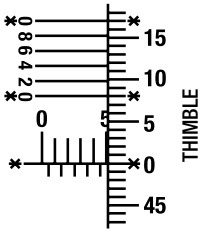

SLEEVE
FIG. B
Reading 5.000mm

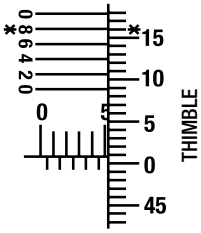

SLEEVE
FIG. C
Reading 5.008mm

FIGURE C – READING 5.008mm

The 5mm sleeve graduation is visible..... 5.000mm

No additional lines on the sleeve are visible..... 0.000mm

The reading line on the sleeve lies between zero and the first line on the thimble, indicating that a vernier reading must be added. ..... ----

Line 8 on the vernier is the only line that coincides with a line on the thimble..... 0.008mm

The micrometer reading is..... 5.008mm

Graduated in One-Thousandth of a Millimeter

0.001MM

Reading a 0.001mm micrometer is exactly like reading a 0.002mm micrometer except that there are ten divisions on the vernier occupying the same space as nine divisions on the thimble (Fig. B). Therefore, the difference between the width of one of the spaces on the vernier and one of the nine spaces on the thimble is one-tenth of a division on the thimble, or one-thousandth (0.001mm).

First obtain the hundredth of a millimeter (0.01mm) reading. Next, see which of the lines on the vernier coincides with a line on the thimble. If it is the first line add

0.001mm to the reading, if it is the second line add 0.002mm, etc. Only every second vernier line is numbered on a 0.001mm reading tool because of space congestion.

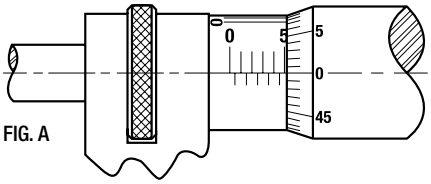

FIG. A

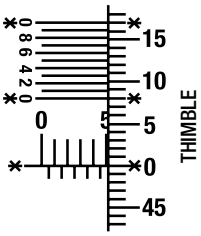

SLEEVE
FIG. B
Reading 5.000mm

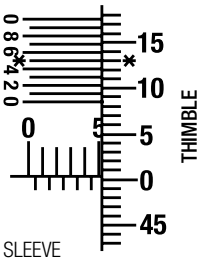

SLEEVE
FIG. C
Reading 5.005mm

FIGURE C – READING 5.005mm

The 5mm sleeve graduation is visible, representing..... 5.000mm

No additional lines on the sleeve are visible ... 0.000mm

The reading line on the sleeve lies between zero and the first line on the thimble, indicating that a vernier reading must be added ..... ----

Line 5 on the vernier is the only line that coincides with a line on the thimble..... 0.005mm

The micrometer reading is..... 5.005mm

Electronic Micrometers

795.1 Electronic Micrometers (with output)

0-4"/0-100MM

796.1 Electronic Micrometers (without output)

0-4"/0-100MM

The expanded 795.1 and 796.1 Micrometer offering now includes measuring ranges up to 4" (100mm). All are IP67 protected against coolant, water, chips, dirt and dust. The 795.1 is equipped with an RS232 output port and is ideal for use with DataSure® Wireless Data Collection Systems or Multiplexer Inupt. Sets available upon request.

Features and Specifications

- Large, easy-to-read .275" (7mm), high-contrast LCD digital readout
- Starrett no-glare satin chrome finish on thimble and sleeve
- Balanced and tapered frame
- Extremely hard and stable one-piece spindle
- Micro-lapped carbide measuring faces
- Auto OFF after 20 minutes of nonuse
- Inch/millimeter conversion on English versions
- Measurement HOLD button
- Zero at any position
- Retain and return to true zero reading
- Resolution: .00005" (0.001mm)
- Accuracy: ±.0001" (±.002mm)

795.1 Electronic Micrometers with Output						
Friction Thimble, Spindle Lock, Shell and Thimble Inch Grads.		Ratchet Stop, Lock Nut, Shell and Thimble Inch Grads.		Ratchet Thimble, Spindle Lock, Shell and Thimble Metric Grads.*		Range
Cat. No.	EDP	Cat. No.	EDP	Cat. No.	EDP	
795.1XFL-1	01100	795.1XRL-1	01108	795.1MXRL-25	01112	0-1" and 0-25mm
795.1XFL-2	01101	795.1XRL-2	01109	795.1MXRL-50	01113	1-2" and 25-50mm
795.1XFL-3	01102	795.1XRL-3	01110	795.1MXRL-75	01114	2-3" and 50-75mm
795.1XFL-4	01103	795.1XRL-4	01111	795.1MXRL-100	01115	3-4" and 75-100mm
796.1 Electronic Micrometers without Output						
796.1XFL-1	01104	796.1XRL-1	01116	796.1MXRL-25	01120	0-1" and 0-25mm
796.1XFL-2	01105	796.1XRL-2	01117	796.1MXRL-50	01121	1-2" and 25-50mm
796.1XFL-3	01106	796.1XRL-3	01118	796.1MXRL-75	01122	2-3" and 50-75mm
796.1XFL-4	01107	796.1XRL-4	01119	796.1MXRL-100	01123	3-4" and 75-100mm

Sets			
Cat. No.	EDP	Range	Description
S795.1AXFLZ	72534	0-3" (0-75mm)	Electronic micrometer set (set of 3), includes 795.1XFL-1, 795.1XFL-2, 795.1XFL-3
S795.1BXFLZ	72535	0-4" (0-100mm)	Electronic micrometer set (set of 4), includes 795.1XFL-1, 795.1XFL-2, 795.1XFL-3, 795.1XFL-4

Cables and Accessories		
Cat. No.	EDP	Description
795.1SCM	01124	SmartCable to multiplexer
795.1SCKB	01125	USB cable to PC (In focused window)
795.1SCU	01126	SmartCable with USB keyboard output
PT99492	65650	Two 3-Volt Batteries, CR2032

*Metric Only

All 795.1 and 796.1 Micrometers include a protective case. All except 1" and 0-25mm sizes furnished with standards.

IP Protection

An IP number is composed of two numbers, the first referring to protection against solid objects and the second against liquids.

First number 6: Totally protected against dust

Second number 7: Protection against submersion in water under standardized conditions of pressure for 30 minutes

All 795.1 and 796.1 Micrometers include IP67 protection

Electronic Micrometers

3732 Electronic Micrometers (without output)

0-6"/0-150MM

The 3732 Electronic Micrometer is a full-featured precision measuring tool built with customary Starrett quality and workmanship. The 3732 includes a large, easy-to-read, high contrast LCD digital readout for clear readings. With its automatic OFF functionality, smooth friction thimble for uniform pressure, and balanced frame design, the 3732 provides comfortable and accurate measuring.

3732 Inch/Metric Micrometers without Output							
Cat. No.	EDP	Range		Resolution		Accuracy	
		in	Approx. mm	in	mm	in	mm
3732XFL-1	12268	0-1	0-25.4	0.0001	0.001	± 0.0001	± 0.002
3732XFL-2	12269	1-2	25.4-50.8	0.0001	0.001	± 0.0001	± 0.003
3732XFL-3	12270	2-3	50.8-76.2				
3732XFL-4	12271	3-4	76.2-101.6	0.0001	0.001	± 0.00015	± 0.004
3732XFL-5	12272	4-5	101.6-127	0.0001	0.001	± 0.00015	± 0.004
3732XFL-6	12273	5-6	127-152.4				
3732 Metric/Inch Micrometers without Output							
Cat. No.	EDP	mm	Approx. in	mm	in	mm	in
3732MEXFL-25	12274	0-25	0-.984	0.001	0.0001	± 0.002	± 0.0001
3732MEXFL-50	12275	25-50	.984-1.968	0.001	0.0001	± 0.003	± 0.0001
3732MEXFL-75	12276	50-75	1.968-2.953				
3732MEXFL-100	12277	75-100	2.953-3.937	0.001	0.0001	± 0.004	± 0.0001
3732MEXFL-125	12278	100-125	3.937-4.921	0.001	0.0001	± 0.004	± 0.0001
3732MEXFL-150	12279	125-150	4.921-5.905				
3732 Inch/Metric Micrometer Sets without Output							
Cat. No.	EDP	in	mm	Description			
S3732BXFLZ	12726	0-1 to 3-4	0-25.4 to 76.2-101.6	0 to 4 inch set of four micrometers in metal case			
S3732CXFLZ	12727	0-1 to 5-6	0-25.4 to 101.6-152.4	0 to 6 inch set of six micrometers in metal case			
3732 Micrometer Accessories							
Part No.	EDP	Description					
PT99492	65650	CR2032 3-volt battery for 3732 Micrometers					

All electronic micrometers include protective case

Features and Specifications

- Automatic OFF after 30 minutes of nonuse
- .250" (6.35mm) spindle diameter
- No-glare black wrinkle finish on frame
- No-glare satin chrome finish on thimble and sleeve
- Ring-type knurled lock nut for quick and sure locking
- English/Metric models feature inch graduations on shell and thimble
- Metric/English (ME) models have mm graduations on shell and thimble
- Instant inch/millimeter conversion
- Measurement HOLD button
- Ability to zero tool at any position
- Ability to retain and return to the true zero reading of the micrometer
- PRESET button to install any reading at any position
- Includes one 3-volt battery for over one year of normal usage

3732XFL-4

3732XFL-1

S3732CXFLZ

Electronic Micrometers

733 Electronic Micrometers (with output)

0-24"/0-600MM

- With output to cable or DataSure® Wireless Systems

733 Electronic Micrometers with Standard Inch Graduations

Cat. No.	EDP	Range in	Range mm	Resolution in	Resolution mm
733XFL-1	64239	0 - 1	0 - 25.4	0.0001	0.001
733XFL-1 W/SLC	66905				
733XFLZ-2	64241	1 - 2	25.4 - 50.8	0.0001	0.001
733XFLZ-3	64242	2 - 3	50.8 - 76		
733XFLZ-4	64243	3 - 4	76 - 101		
733XFLZ-5	64244	4 - 5	101 - 127	0.0001	0.001
733XFLZ-6	64245	5 - 6	127 - 152		
733XFLZ-7	64246	6 - 7	152 - 178	0.0001	0.001
733XFLZ-8	64247	7 - 8	178 - 203		
733XFLZ-9	64248	8 - 9	203 - 228		
733XFLZ-10	64249	9 - 10	228 - 254		
733XFLZ-11	64250	10 - 11	254 - 279		
733XFLZ-12	64251	11 - 12	279 - 305		
733XFLZ-13	64415	12 - 13	305 - 330		
733XFLZ-14	64416	13 - 14	330 - 355		
733XFLZ-15	64417	14 - 15	355 - 381		
733XFLZ-16	64418	15 - 16	381 - 406		
733XFLZ-17	64419	16 - 17	406 - 432		
733XFLZ-18	64420	17 - 18	432 - 457		
733XFLZ-19	64421	18 - 19	457 - 482		
733XFLZ-20	64422	19 - 20	482 - 508		
733XFLZ-21	64423	20 - 21	508 - 533		
733XFLZ-22	64424	21 - 22	533 - 559		
733XFLZ-23	64425	22 - 23	559 - 584		
733XFLZ-24	64426	23 - 24	584 - 609		

All except 1" size furnished with standards.

733 Electronic Micrometers with Standard Millimeter Graduations

Cat. No.	EDP	Range mm	Range in	Resolution mm	Resolution in
733MEXFL-25	65440	0 - 25	0 - .984	0.001	0.0001
733MEXFLZ-50	65441	25 - 50	.984 - 1.968	0.001	0.0001
733MEXFLZ-75	66079	50 - 75	1.968 - 2.950		
733MEXFLZ-100	66080	75 - 100	2.950 - 3.930		
733MEXFLZ-125	66081	100 - 125	3.930 - 4.920	0.001	0.0001
733MEXFLZ-150	66082	125 - 150	4.920 - 5.900		
733MEXFLZ-175	66083	150 - 175	5.900 - 6.890	0.001	0.0001
733MEXFLZ-200	66084	175 - 200	6.890 - 7.870		
733MEXFLZ-225	66085	200 - 225	7.870 - 8.850		
733MEXFLZ-250	66086	225 - 250	8.850 - 9.840		
733MEXFLZ-275	66087	250 - 275	9.840 - 10.820		
733MEXFLZ-300	66088	275 - 300	10.820 - 11.810		
733MEXFLZ-325	66089	300 - 325	11.810 - 12.790		
733MEXFLZ-350	66090	325 - 350	12.790 - 13.770		
733MEXFLZ-375	66091	350 - 375	13.770 - 14.760		
733MEXFLZ-400	66092	375 - 400	14.760 - 15.740		
733MEXFLZ-425	66093	400 - 425	15.740 - 16.730		
733MEXFLZ-450	66094	425 - 450	16.730 - 17.710		
733MEXFLZ-475	66095	450 - 475	17.710 - 18.700		
733MEXFLZ-500	66096	475 - 500	18.700 - 19.680		
733MEXFLZ-525	66097	500 - 525	19.680 - 20.660		
733MEXFLZ-550	66098	525 - 550	20.660 - 21.650		
733MEXFLZ-575	66099	550 - 575	21.650 - 22.630		
733MEXFLZ-600	66100	575 - 600	22.630 - 23.620		

All except 1" and 0-25mm sizes furnished with standards.

733 Micrometer with DataSure End Node

733 Electronic Micrometer Accessories

Cat. No.	EDP	Description
957	66565	Protective case for 733 Micrometers
949	63874	Deluxe padded case for 25mm 733 Micrometers
733SCKB	69888	USB cable to PC (In focused window)
733SCU	69898	USB cable to computer running SPC Data Collection Software
733SCM	69893	SmartCable connection to Multiplexer (7612 , 7613 or RMS 2704)
PT61963	66636	Computer Interface Cable Complete to PC (RS232C)
PT61120	65446	One 3-volt battery CR2450 for 733 Micrometers

733 Micrometer Specifications

Description	in	mm
Resolution through 4" (100mm)	.00005	0.001
Resolution over 4" (100mm)	.0001	0.001
Accuracy*	±.0001	±0.002

* Accuracies above 1" (25mm) are as good as setting to a gage because the mechanical and electronic components are the same on all ranges.
All electronic micrometers include protective case.

Digital Micrometers

216 Digital Micrometers

0-12"/0-300MM

This is the 216 Mechanical Digital Micrometer – simple to use even by the inexperienced. The anvil and spindle are sized at .250" (6.35mm).

Readability Features

- Clear, easily read numbers reduce errors
- No-glare black finish on the frame
- Starrett no-glare satin chrome finish on thimble and sleeve
- .001" or .01mm is read directly from the counter
- .0001" or .001mm is read from the vernier scale on the micrometer sleeve

Ease-of-Handling Features

- Balanced frame design for comfortable and accurate measuring
- Ring-type knurled lock nut for quick and sure locking
- A choice of smooth friction thimble for uniform pressure on the 1-4" sizes or the combination ratchet and speeder for uniform pressure and quicker adjustment on all sizes
- Gracefully designed tapered frame for use in narrow slots and tight places

Accuracy and Long-Life Features

- Extremely hard and stable one-piece spindle (the heart of our accuracy)

S216 Digital Micrometer Set

0-3"

Set of three digital micrometers – furnished with ratchet stop, lock nut, and standards, in case.

- Set consists of three micrometers: 0-1", 1-2", and 2-3"
- .001" is read directly from the counter
- .0001" is read from the sleeve
- Clear, easily read numbers
- Balanced frame design and extremely hard and stable one-piece spindle

216 Digital Micrometers

Ratchet Stop and Lock Nut		Friction Thimble and Lock Nut		Plain				Measuring
Cat. No.	EDP	Cat. No.	EDP	Cat. No.	EDP	Grads.	Range	Faces
216RL-1	55953	216FL-1	55954	216P-1	55952	.001	0-1"	Steel
216XRL-1	55955	216XFL-1	55956					Carbide
216RL-2	56153	216FL-2	56257				1-2"	
216RL-3	56205	216FL-3	56206				2-3"	
216RL-4	56208	216FL-4	56209			.001"	3-4"	Steel
216RL-5	63470						4-5"	
216RL-6	63471						5-6"	
216XRL-7	63628						6-7"	
216XRL-8	63629						7-8"	
216XRL-9	63630					.001"	8-9"	Carbide
216XRL-10	63631						9-10"	
216XRL-11	63632						10-11"	
216XRL-12	63633						11-12"	
T216XRL-1	55959	T216XFL-1	55960				0-1"	
T216XRL-1 W/SLC	66904	T216XFL-1 W/SLC	66903					
T216XRL-2	56156	T216XFL-2	56157				1-2"	
T216XRL-3	63491	T216XFL-3	63634				2-3"	
T216XRL-4	63492		63635				3-4"	
T216XRL-5	63493						4-5"	
T216XRL-6	63494					.0001"	5-6"	Carbide
T216XRL-7	63495						6-7"	
T216XRL-8	63496						7-8"	
T216XRL-9	63497						8-9"	
T216XRL-10	63498						9-10"	
T216XRL-11	63499						10-11"	
T216XRL-12	63500						11-12"	
216MXRL-25	55983	216MXFL-25	55984				0-25mm	
216MXRL-50	65602						25-50mm	
216MXRL-75	65603						50-75mm	
216MXRL-100	65604						75-100mm	
216MXRL-125	64351						100-125mm	
216MXRL-150	64352					0.01mm	125-150mm	Carbide
216MXRL-175	64353						150-175mm	
216MXRL-200	64354						175-200mm	
216MXRL-225	64355						200-225mm	
216MXRL-250	64356						225-250mm	
216MXRL-275	64357						250-275mm	
216MXRL-300	64358						275-300mm	
V216MXRL-25	56037	V216MXFL-25	56036				0-25mm	
V216MXRL-50	64348					0.001mm	25-50mm	Carbide
V216MXRL-75	64349						50-75mm	
V216MXRL-100	64350						75-100mm	

S216 Digital Micrometer Set

Cat. No.	EDP
ST216AXRLZ	66526

Cases Only for 216 and 216M Digital Micrometers

		Fits Micrometer Range	
Cat. No.	EDP	in	mm
942	55961	0-1	0-25
216ZZ-2	56171	1-2	25-50
922	55222	2-3	50-75
952	55223	3-4	75-100
953	55224	4-5	100-125
954	55225	5-6	125-150
930	55276	6-7	150-175
931	55277	7-8	175-200
932	55278	8-9	200-225
933	55279	9-10	225-250
934	55280	10-11	250-275
935	55281	11-12	275-300

Outside Micrometers

230 Outside Micrometers

0-1"/0-25MM

This is the jewel of precision micrometers used by skilled workmen worldwide. The spindle and anvil are sized at .235" (6mm) to reach places most micrometers cannot reach.

Features and Specifications

- Same as our 232 Outside Micrometers plus quick-reading figures – every thousandth numbered on inch tools
- Same as our 232 Outside Micrometers with a choice of smooth friction thimble for uniform pressure or the combination ratchet and speeder for uniform pressure and quicker adjustment

230 and 230M Outside Micrometers (0-1" Range)		
Cat. No.	**EDP**	**Graduation**
230P	50932	.001"
230RL	50935	
230FL	50938	
T230RL	50943	.0001"
T230XRL	50944	
T230XRL W/SLC	64401	
T230FL	50946	
T230XFL	50947	
T230XFL W/SLC	66916	
V230MXRL	56017	0.001mm
V230MXFL	56016	
Deluxe Padded Case for 230 and 230M Outside Micrometers		
Cat. No.	**EDP**	**Description**
910	55397	Case for 1" (25mm) Micrometers

Case not included.

232 Outside Micrometers

0-1/2"/0-12.5MM

These micrometers are the 1/2" (13mm) companions of the top-of-the-line 230 Micrometers. The spindle and anvil are sized at .200" (5mm).

Features and Specifications

- Starrett satin chrome finish – no glare – resists rust
- Advanced sleeve design with staggered lines and distinct figures for precise and easy readability
- Convenient decimal equivalents on inch tools
- Rigid one-piece frame of drop forged steel
- Extremely hard and stable one-piece spindle (the heart of our accuracy)
- Quick and easy adjustment
- Balanced frame and thimble design ensure easy handling and better readability
- Ring-type knurled lock nut for quick and sure locking
- Combination ratchet and speeder for uniform pressure and quicker adjustment
- Gracefully designed tapered frame for use in narrow slots and tight places

232 and 232M Outside Micrometers			
Cat. No.	**EDP**	**Range**	**Graduation**
232RL	50953	0-1/2"	.001"
T232RL	50955		.0001"
T232XRL	50968		
232MRL	50954	0-13mm	0.01mm
V232MXRL	64231		0.002mm
Attractive, Protective Case for 232 and 232M Outside Micrometers			
Cat. No.	**EDP**	**Description**	
921	55213	Case for 1/2" (13mm) Micrometers	

Case not included.

Outside Micrometers

2 Outside Micrometers

1-2"/25-50MM

These micrometers are the 2" (50mm) companions of the top-of-the-line 230 Micrometer.

The spindle and anvil are sized at .235" (6mm) to reach places other micrometers cannot.

Readability Features

- Starrett satin chrome finish – no glare – resists rust
- Advanced sleeve design with staggered and distinct figures for precise and easy readability
- Convenient decimal equivalents on inch tools

Ease-of-Handling Features

- Balanced frame and thimble design ensure easy handling and better readability
- Ring-type knurled lock nut for quick and sure locking
- A choice of smooth friction thimble for uniform pressure or the combination ratchet and speeder for uniform pressure and quicker adjustment
- Gracefully designed tapered frame for use in narrow slots and tight places

Accuracy and Long-Life Features

- Rigid one-piece frame of drop forged steel
- Extremely hard and stable one-piece spindle (the heart of our accuracy)
- Appropriate 1" or 25mm gage block standard furnished with micrometers

2A Outside Micrometers with Attachment

0-2"/0-50MM

These micrometers are versions of the 2 and 2M that include an attachment to handle measurements from 0-1" or 0-25mm, thereby extending the total range from 0-2" or 50mm.

Easily and quickly attached to the anvil of the micrometer, it is only necessary to tighten a locking screw to make the conversion. The anvil extension is hardened, ground and lapped. No-glare satin chrome finish.

2 and 2M Outside Micrometers			
Cat. No.	**EDP**	**Range**	**Graduation**
T2XRL	50024	1-2"	.0001"
T2XFL	50025		
2MXRL	50026	25-50mm	0.01mm
V2MXRL	63793		0.001mm
2A and 2MA Outside Micrometer			
Cat. No.	**EDP**	**Range**	**Graduation**
2ARL	50027	0-2"	.001"
2MARL	50029	0-50mm	0.01mm
Deluxe Padded Case for 2, 2A, 2M and 2MA Outside Micrometers			
Cat. No.	**EDP**	**Description**	
912	55399	Case for 2" and 50mm Micrometers	

Micrometers furnished in a protective case.

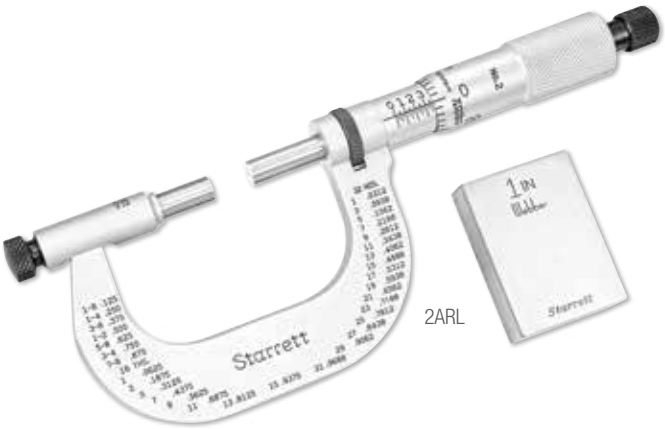

Stainless Steel Micrometers

1230 Stainless Steel Micrometers

0-1"/0-25MM

1212 Stainless Steel Micrometers

1-2"/25-50MM

This micrometer is made from stainless steel for use under adverse atmospheric and operating conditions.

1230 and 1230M Stainless Steel Micrometers			
Cat. No.	**EDP**	**Range**	**Graduation**
1230XRL	53196	0-1"	.001"
T1230XRL	53197		.0001"
V1230MXRL	64263	0-25mm	0.001mm
1212 and 1212M Stainless Steel Micrometers			
Cat. No.	**EDP**	**Range**	**Graduation**
1212XRL	53178	1-2"	.001"
T1212XRL	53179		.0001"
V1212MXRL	64264	25-50mm	0.001mm
Deluxe Padded Cases for 1212 and 1212M Stainless Steel Micrometers			
Cat. No.	**EDP**	**Description**	
910	55397	Case for 1" (25mm) Micrometers	
912	55399	Case for 2" (50mm) Micrometers	

1" and 25mm Models sent in fitted case. 2" and 50mm Models packed one in a box without case.

Readability Features

- Satin finish stainless steel – no glare – rust and stain resistant
- Advanced sleeve design with staggered lines and distinct figures for precise and easy readability
- Convenient decimal equivalents on inch tools

Ease-of-Handling Features

- Balanced frame and thimble design ensure easy handling and better readability
- Ring-type knurled lock nut for quick and sure locking
- The combination ratchet and speeder for uniform pressure and quicker adjustment
- Gracefully designed tapered frame for use in narrow slots and tight places

Accuracy and Long-Life Features

- Rigid one-piece frame of drop forged steel
- Extremely hard and stable one-piece spindle (the heart of our accuracy)
- Quick and easy adjustment
- Gage block standard supplied for 1-2" micrometer

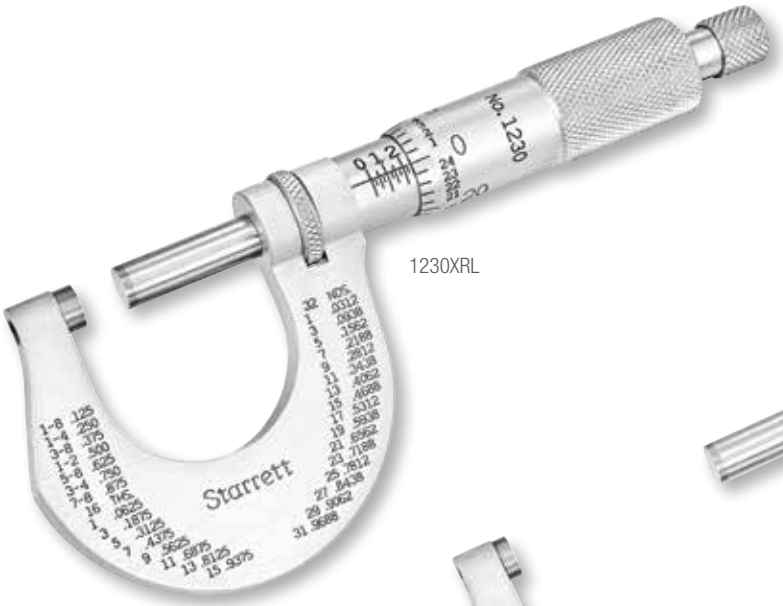

1230XRL

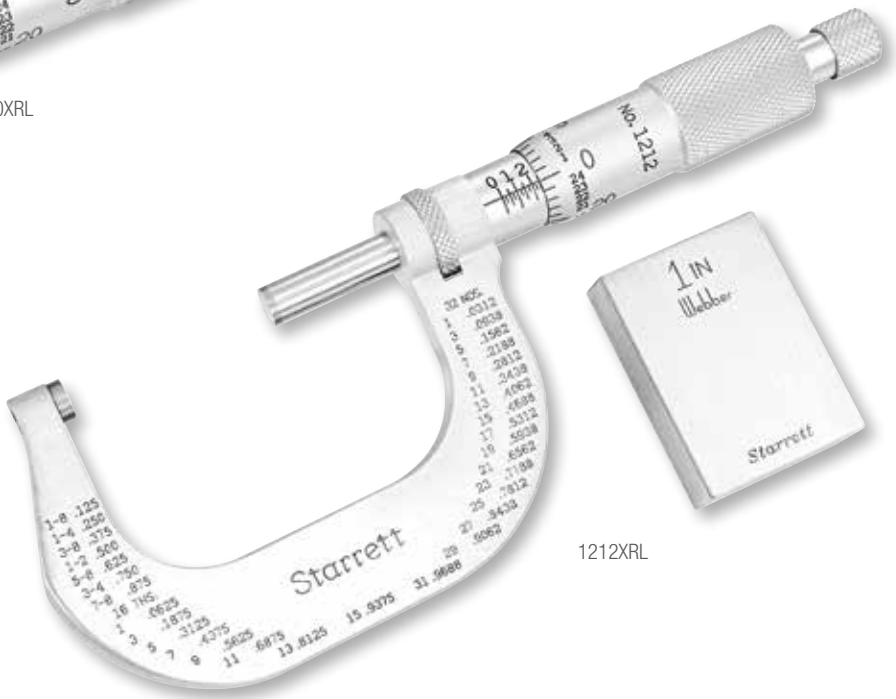

1212XRL

Outside Micrometers

NEW!

T444.1 Outside Micrometer

The T444.1 Outside Micrometers have a heat-insulator on the frame to help reduce temperature-related expansion or contraction. The spindle and anvil have flat measuring faces and are carbide-tipped for wear resistance. A spindle lock helps provide secure locking of the measurement.

Cat. No.	EDP	Graduation	Range
T444.1XRL-1	52083	.0001"	0-1"
T444.1XRL-2	52084	.0001"	1-2"
T444.1XRL-3	52085	.0001"	2-3"
T444.1XRL-4	52086	.0001"	3-4"
T444.1XRL-5	52087	.0001"	4-5"
T444.1XRL-6	52088	.0001"	5-6"
444.1MXRL-25	51072	.01mm	0-25mm
444.1MXRL-50	51073	.01mm	25-50mm
444.1MXRL-75	51085	.01mm	50-75mm
444.1MXRL-100	51088	.01mm	75-100mm
444.1MXRL-125	51091	.01mm	100-125mm
444.1MXRL-150	91094	.01mm	125-150mm

Sets

Cat. No.	EDP	Graduation	Range	Description
ST444.1BXRLZ	72531	.0001"	0-4"	Set of four micrometers in metal case
ST444.1CXRLZ	72532	.0001"	0-6"	Set of four micrometers in metal case
S444.1MBXRLZ	21089	.01mm	0-100mm	Set of four micrometers in metal case
S444.1MCXRLZ	21090	.01mm	0-150mm	Set of four micrometers in metal case

All micrometers and sets furnished with a protective case.

Features

- No-glare satin chrome finish which resists rust
- Advanced sleeve design with staggered lines and distinct figures for precise and easy readability
- Balanced frame and thimble design to ensure easy handling and better readability
- Insulated frame for prevention of temperature related expansion and contraction
- Provides quick and easy adjustment
- Reading in ten-thousandths of an inch (.0001") with a vernier scale on the sleeve

T444.1XRL-4

T444.1XRL-1

Micrometers

231, 231M Micrometers with Insulated Frames

0-1"/0-25MM

This is a slightly heavier micrometer with thermal insulators mounted on the frame front and rear. This spindle and anvil are sized at .250" (6.35mm).

Readability Features

- Starrett satin chrome finish – no glare – resists rust
- Advanced sleeve design with staggered lines and distinct figures for precise and easy readability
- Quick-reading figures – every thousandth numbered on inch tools

Ease-of-Handling Features

- Balanced frame and thimble design ensure easy handling and better readability
- Ring-type knurled lock nut for quick and sure locking
- A combination ratchet and speeder for uniform pressure and quicker adjustment on all sizes
- Gracefully designed tapered frame for use in narrow slots and tight places

Accuracy and Long-Life Features

- Rigid one-piece frame of drop forged steel
- Extremely hard and stable one-piece spindle (the heart of our accuracy)
- Quick and easy adjustment

221 Hi-Precision Micrometer

0-1"

- Permits direct readings in ten-thousandths of an inch (.0001") without a vernier, plus automatic control of spindle pressure
- Black graduated inner thimble and sleeve reading in thousandths and red graduated outer thimble and sleeve with large, widely spaced graduations which give direct readings in ten-thousandths

Readability Features

- Exclusive constant pressure mechanism eliminates "feel" and ensures constant spindle pressure for all readings
- Starrett satin chrome finish – no glare – resists rust
- Advanced sleeve design with staggered lines and distinct figures for precise and easy readability
- Convenient decimal equivalents on inch tools

Ease-of-Handling Features

- Balanced frame and thimble design for easy handling and better readability
- Ring-type knurled lock nut for quick and sure locking
- Gracefully designed tapered frame for use in narrow slots and tight places

Accuracy and Long-Life Features

- Rigid one-piece frame of drop forged steel
- Extremely hard and stable one-piece spindle (the heart of our accuracy)
- Quick and easy adjustment

231 and 231M Micrometers (0-1" Range)			
Cat. No.	**EDP**	**Range**	**Graduation**
T231XRL	63967	0-1"	.0001"
V231MXRL	63969	0-25mm	0.001mm
Deluxe Padded Case for 231 and 231M Micrometers			
Cat. No.	**EDP**	**Description**	
942	55961	Case for 1" (25mm) Micrometers	

221 Hi-Precision Micrometer (0-1" Range)		
Cat. No.	**EDP**	**Graduation**
T221XL	50754	.0001"
Deluxe Padded Case for 221 Hi-Precision Micrometer		
Cat. No.	**EDP**	**Description**
910	55397	Case for 1" (25mm) Micrometers

V231MXRL

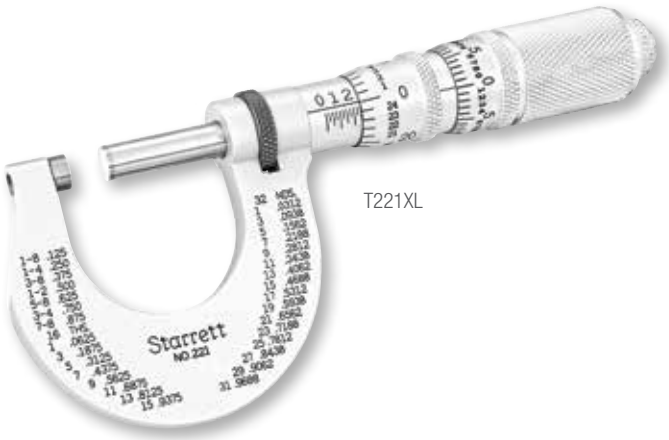

T221XL

Outside Micrometers

226 Outside Micrometers

1-6"/25-150MM

- Rugged construction and extremely attractive design
- For craftsmen who want a precision micrometer with a distinctive Starrett design and finish
- Strong ribbed frame with smooth black enamel finish and polished steel ribs and hub

226 Outside Micrometers (.001" Graduation)				
Ratchet Stop and Lock Nut		Standard (extra)		Range
Cat. No.	EDP	Cat. No.	EDP	
226RL-1	12209			0-1"
226RL-2	50820	234B-1	51017	1-2"
226RL-3	50825	234B-2	51019	2-3"
226RL-4	50830	234B-3	51021	3-4"
226RL-5	50835	234B-4	51023	4-5"
226RL-6	50840	234B-5	51025	5-6"
226 Outside Micrometers, Carbide Faces (.0001" Graduation)				
T226XRL-1	12211			0-1"
T226XRL-2	50903	234B-1	51017	1-2"
T226XRL-3	50904	234B-2	51019	2-3"
T226XRL-4	50905	234B-3	51021	3-4"
T226XRL-5	50906	234B-4	51023	4-5"
T226XRL-6	50907	234B-5	51025	5-6"
226M Outside Micrometers, Carbide Faces (0.001mm Graduation)				
V226MXRL-25	12212			0-25mm
V226MXRL-50	64265	234MB-25	51018	25-50mm
V226MXRL-75	64266	234MB-50	51020	50-75mm
V226MXRL-100	64267	234MB-75	51022	75-100mm
V226MXRL-125	64268	234MB-100	51024	100-125mm
V226MXRL-150	64269	234MB-125	51026	125-150mm

Micrometer Cases for 226 and 226M Outside Micrometers		
Cat. No.	EDP	Description
910	55397	for 1" (25mm)
913	55400	for 2" (50mm)
922	55222	for 3" (75mm)
952	55223	for 4" (100mm)
953	55224	for 5" (125mm)
954	55225	for 6" (150mm)

Furnished in an attractive protective case.

S226 Micrometer Sets with Standards in Case

0-6"/0-150MM

These sets are recommended for mechanics, automotive service and machine shops, toolrooms, inspection departments, and wherever gaging involves a wide range of measurements.

Readability Features

- Starrett satin chrome finish – no glare – resists rust
- Advanced sleeve design with staggered lines and distinct figures for precise and easy readability
- Quick-reading figures – every thousandth numbered on inch tools

Ease-of-Handling Features

- Balanced frame and thimble design ensure easy handling and better readability
- Ring-type knurled lock nut for quick and sure locking

Accuracy and Long-Life Features

- Rugged frame ribbed for extra strength
- Extremely hard and stable one-piece spindle (the heart of our accuracy)
- Quick and easy adjustment

S226 and S226M Micrometer Sets				
Cat. No.	EDP	Range	Graduation	Set Description
S226ARLZ	50854	0-3"	.001"	Includes 1", 2" and 3" Micrometers, Two Standards, Adjusting Wrench
ST226AXRLZ	56448		.0001"	
S226BRLZ	50862	0-6"	.001"	Includes 1", 2", 3", 4", 5" and 6" Micrometers, Set of Five Standards, Adjusting Wrench
ST226BXRLZ	56798		.0001"	
SV226MAXRLZ	65237	0-75mm	0.001mm	Includes 25mm, 50mm and 75mm Micrometers, Two Standards, Adjusting Wrench
SV226MBXRLZ	65238	0-150mm	0.001mm	Includes 25mm, 50mm, 75mm, 100mm, 125mm and 150mm Micrometers, Set of Five Standards, Adjusting Wrench

Cases Only for S226 and S226M Micrometer Sets		
Cat. No.	EDP	Description
955	55226	Case for 0-3" and 0-75mm Micrometer Sets
956	55227	Case for 0-6" and 0-150mm Micrometer Sets

Outside Micrometers

436.1 Outside Micrometers

0-6"

These are the most popular precision micrometers used by skilled workmen worldwide. They are accurate, rugged, and easy to use.

The 0-6" and 0-150mm sizes have rugged spindles and anvils at .250" (6.35mm) diameter.

436.1 Outside Micrometers (0-1" Range)		436.1 Outside Micrometers (1-2" Range)		
Cat. No.	**EDP**	**Cat. No.**	**EDP**	**Graduation**
436.1P-1	67990	436.1P-2	68001	.001"
436.1XP-1	67991			
436.1RL-1	67993	436.1RL-2	68002	
436.1XRL-1	67994	436.1XRL-2	68003	
436.1XRL-1 W/SLC	67995			
436.1FL-1	67996	436.1FL-2	68004	
T436.1XP-1	67992			.0001"
T436.1XRL-1	67997	T436.1XRL-2	68005	
T436.1XRL-1 W/SLC	67998	T436.1XRL-2 W/SLC	68006	
T436.1XFL-1	67999	T436.1XFL-2	68007	
T436.1XFL-1 W/SLC	68000	T436.1XFL-2 W/SLC	68008	
436.1 Outside Micrometers (2-3" Range)		**436.1 Outside Micrometers (3-4" Range)**		
436.1P-3	68009			.001"
436.1RL-3	68010	436.1RL-4	68017	
436.1XRL-3	68011	436.1XRL-4	68018	
436.1FL-3	68012			
T436.1XRL-3	68013	T436.1XRL-4	68019	.0001"
T436.1XRL-3 W/SLC	68014	T436.1XRL-4 W/SLC	68020	
T436.1XFL-3	68015	T436.1XFL-4	68021	
T436.1XFL-3 W/SLC	68016	T436.1XFL-4 W/SLC	68022	
436.1 Outside Micrometers (4-5" Range)		**436.1 Outside Micrometers (5-6" Range)**		
436.1RL-5	68023	436.1RL-6	68029	.001"
436.1XRL-5	68024	436.1XRL-6	68030	
T436.1XRL-5	68025	T436.1XRL-6	68031	.0001"
T436.1XRL-5 W/SLC	68026	T436.1XRL-6 W/SLC	68032	
T436.1XFL-5	68027	T436.1XFL-6	68033	
T436.1XFL-5 W/SLC	68028	T436.1XFL-6 W/SLC	68034	

Sent in fitted plastic case.

Features and Specifications

- Starrett satin chrome finish – no glare – resists rust
- Advanced sleeve design with staggered lines and distinct figures for precise and easy readability
- Balanced frame and thimble design ensure easy handling
- Ring-type knurled lock nut for quick and sure locking
- Smooth friction thimble for uniform pressure, the combination ratchet and speeder for uniform pressure and quicker adjustment, or a plain micrometer that depends on your own "feel"
- Gracefully designed tapered frame for use in narrow slots and tight places
- Rigid steel frame ribbed for extra strength on sizes through 6" (150mm)
- Extremely hard and stable one-piece spindle (the heart of our accuracy)
- Quick and easy adjustment

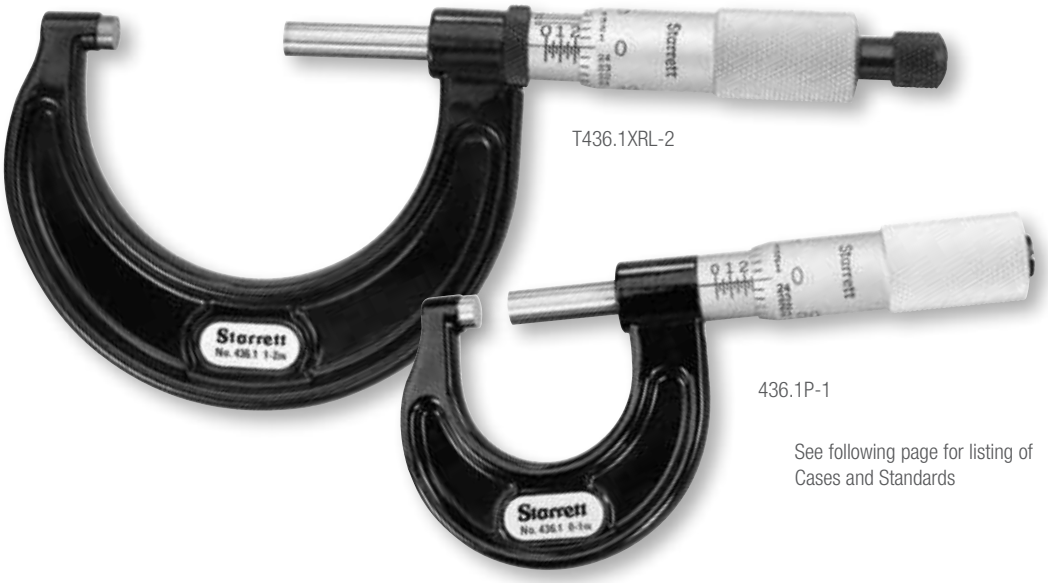

T436.1XRL-2

436.1P-1

See following page for listing of Cases and Standards

Outside Micrometers

436.1 Outside Micrometers

6-24" (0-600MM)

Same balanced design as the smaller sizes but proportioned to these larger sizes with .300" (7.6mm) anvil and spindle diameters for ease of use on larger work.

All the same features as the 0-6" and 0-150mm ranges 436.1 Micrometers, except:

- Larger sizes are furnished with combination ratchet and speeder for uniform pressure and quicker adjustment
- Rigid and stable special cast iron frame with perforations for lightness and ribbed for strength and stability

436 Outside Micrometers

Cat. No.	EDP	Range	Graduation
436.1RL-7	72710	6-7"	.001"
436.1XRL-7	72716		
T436.1XRL-7	72734		.0001"
436.1RL-8	72711	7-8"	.001"
436.1XRL-8	72717		
T436.1XRL-8	72735		.0001"
436.1RL-9	72712	8-9"	.001"
436.1XRL-9	72718		
T436.1XRL-9	72736		.0001"
436.1RL-10	72713	9-10"	.001"
436.1XRL-10	72719		
T436.1XRL-10	72737		.0001"
436.1RL-11	72714	10-11"	.001"
436.1XRL-11	72720		
T436.1XRL-11	72738		.0001"
436.1RL-12	72715	11-12"	.001"
436.1XRL-12	72721		
T436.1XRL-12	72739		.0001"
436.1XRLZ-13	72722	12-13"	.001"
436.1XRLZ-14	72723	13-14"	
436.1XRLZ-15	72724	14-15"	
436.1XRLZ-16	72725	15-16"	
436.1XRLZ-17	72726	16-17"	
436.1XRLZ-18	72727	17-18"	
436.1XRLZ-19	72728	18-19"	
436.1XRLZ-20	72729	19-20"	
436.1XRLZ-21	72730	20-21"	
436.1XRLZ-22	72731	21-22"	
436.1XRLZ-23	72732	22-23"	
436.1XRLZ-24	72733	23-24"	

7-12" models sent without case, packed one each to a box.
13-24" models are furnished in a case at no extra charge.

436 Outside Micrometers

Cat. No.	EDP	Range	Graduation
436.1MP-25	68047	0-25mm	0.01mm
436.1MRL-25	68048		
436.1MXFL-25	68050		
V436.1MXRL-25	68051		
436.1MXRL-25	68049	0-25mm	0.001mm
436.1MRL-50	68052	25-50mm	0.01mm
436.1MXRL-50	68053		
V436.1MXRL-50	68054	25-50mm	0.001mm
436.1MRL-75	68055	50-75mm	0.01mm
436.1MXRL-75	68056		
V436.1MXRL-75	68057	50-75mm	0.001mm
436.1MRL-100	68058	75-100mm	0.01mm
436.1MXRL-100	68059		
V436.1MXRL-100	68060	75-100mm	0.001mm
436.1MRL-125	68061	100-125mm	0.01mm
436.1MXRL-125	68062		
V436.1MXRL-125	68063	100-125mm	0.001mm
436.1MRL-150	68064	125-150mm	0.01mm
436.1MXRL-150	68065		
V436.1MXRL-150	68066	125-150mm	0.001mm
436.1MXRL-175	72740	150-175mm	0.01mm
436.1MXRL-200	72741	175-200mm	
436.1MXRL-225	72742	200-225mm	
436.1MXRL-250	72743	225-250mm	
436.1MXRL-275	72744	250-275mm	
436.1MXRL-300	72745	275-300mm	
436.1MXRLZ-325	72746	300-325mm	
436.1MXRLZ-350	72747	325-350mm	
436.1MXRLZ-375	72748	350-375mm	
436.1MXRLZ-400	72749	375-400mm	
436.1MXRLZ-425	72750	400-425mm	
436.1MXRLZ-450	72751	425-450mm	
436.1MXRLZ-475	72752	450-475mm	
436.1MXRLZ-500	72453	475-500mm	
436.1MXRLZ-525	72754	500-525mm	
436.1MXRLZ-550	72755	525-550mm	
436.1MXRLZ-575	72756	550-575mm	
436.1MXRLZ-600	72757	575-600mm	

25-150mm models sent in fitted plastic case. 175-300mm models sent without case, packed one each to a box.
325-600mm models are furnished in a case at no extra charge.

MEASURING RODS AND STANDARDS CAN BE FOUND ON PAGE 76

914
Leather Holster

436.1RL-12

Holster and Cases for Inch and Millimeter Micrometers

Cat. No.	EDP	Description
914	64165	Leather holster for 1" (25mm) micrometers
910	55397	Case for 1" (25mm) micrometers
913	55400	Case for 2" (50mm) micrometers
922	55222	Case for 3" (75mm) micrometers
952	55223	Case for 4" (100mm) micrometers
953	55224	Case for 5" (125mm) micrometers
954	55225	Case for 6" (150mm) micrometers
930	55276	Case for 7" (175mm) micrometers
931	55277	Case for 8" (200mm) micrometers
932	55278	Case for 9" (225mm) micrometers
933	55279	Case for 10" (250mm) micrometers
934	55280	Case for 11" (275mm) micrometers
935	55281	Case for 12" (300mm) micrometers

Micrometer Sets

S436.1 Micrometer Sets with Standards, in Attractive, Protective Cases

0-24" (0-600MM)

Recommended for mechanics, automotive service and machine shops, toolrooms, inspection departments, and wherever gaging involves a wide range of measurements. All sets come with attractive, protective cases which keep micrometers and standards together, readily accessible.

For further information on each type of micrometer, refer to the listing on the previous pages.

ST436.1AXRLZ

S436.1 Micrometer Sets				
Cat. No.	**EDP**	**Range**	**Graduation**	**Set Description**
S436.1ARLZ S436.1AXRLZ ST436.1AXRLZ ST436.1AXFLZ	68035 68036 68037 68038	0-3"	.001" .0001"	Each Set Includes: 1", 2" and 3" micrometers, with two standards
S436.1BRLZ S436.1BXRLZ ST436.1BXRLZ ST436.1BXFLZ	68039 68040 68041 68042	0-4"	.001" .0001"	Each Set Includes: 1", 2", 3" and 4" micrometers, with three standards
S436.1CRLZ S436.1CXRLZ ST436.1CXRLZ ST436.1CXFLZ	68043 68044 68045 68046	0-6"	.001" .0001"	Each Set Includes: 1", 2", 3", 4", 5" and 6" micrometers, with five standards
S436 Micrometer Sets				
Cat. No.	**EDP**	**Range**	**Graduation**	**Set Description**
S436ERLZ S436EXRLZ ST436EXRLZ	51931 52012 52030	0-12"	.001" .0001"	Each Set Includes: 1", 2", 3", 4", 5", 6", 7", 8", 9", 10", 11" and 12" micrometers, with eleven standards
S436DRLZ S436DXRLZ ST436DXRLZ	51919 64463 64465	6-12"	.001" .0001"	Each Set Includes: 7", 8", 9", 10", 11" and 12" micrometers, with six standards
S436FXRLZ	64466	12-24"	.001"	Set Includes: 13", 14", 15", 16", 17", 18", 19", 20", 21", 22", 23" and 24" micrometers, with twelve standards

Box type cases available for sets 0-6", 6-12", 12-24" with 6, 12, or 24 micrometers and flat type cases available for sets 0-3" or 0-4" with 3 or 4 micrometers.

S436.1M Micrometer Sets				
Cat. No.	**EDP**	**Range**	**Graduation**	**Set Description**
S436.1MARLZ S436.1MAXRLZ SV436.1MAXRLZ	68067 68068 68069	0-75mm	0.01mm 0.001mm	Each Set Includes: 25mm, 50mm and 75mm micrometers, with two standards
S436.1MBRLZ S436.1MBXRLZ SV436.1MBXRLZ	68070 68071 68072	0-100mm	0.01mm 0.001mm	Each Set Includes: 25mm, 50mm, 75mm and 100mm micrometers with three standards
S436.1MCRLZ S436.1MCXRLZ SV436.1MCXRLZ	68073 68074 68075	0-150mm	0.01mm 0.001mm	Each Set Includes: 25mm, 50mm, 75mm, 100mm, 125mm and 150mm micrometers, with five standards
S436M Micrometer Sets				
Cat. No.	**EDP**	**Range**	**Graduation**	**Set Description**
S436MEXRLZ	52014	0-300mm	0.01mm	Set Includes: 25, 50, 75, 100, 125, 150, 175, 200, 225, 250, 275 and 300mm micrometers, with eleven standards
S436MDXRLZ	64461	150-300mm	0.01mm	Set Includes: 175, 200, 225, 250, 275 and 300mm micrometers, with six standards
S436MFXRLZ	64462	300-600mm	0.01mm	Set Includes: 325, 350, 375, 400, 425, 450, 475, 500, 525, 550, 575 and 600mm micrometers, with twelve standards

Box type cases available for sets 0-150mm, 150-300mm, 300-600mm with 6, 12, or 24 micrometers and flat type cases available for sets 0-75mm or 0-100mm with 3 or 4 micrometers.

Cases for S436.1 and S436 Micrometer Sets		
Cat. No.	**EDP**	**Description**
955	55226	Case only for S436A sets
936	55295	Case only for S436B sets
956	55227	Case only for S436C sets
938	55298	Case only for S436E sets
937	55297	Case only for S436D sets
S436FZZ	64339	Case only for S436F sets

* Includes redemption card for Standard Letter of Certification (SLC).

MEASURING RODS AND STANDARDS CAN BE FOUND ON PAGE 76

Anvil Micrometers

224.1 Mechanical Interchangeable Anvil Micrometer

0-24"/0-600MM

Increased flexibility by offering a wide range of measurements. The 224 Satin-Chrome Micrometers are very popular in machine or automotive repair shops and for all applications requiring a single micrometer with range greater than 1".

Each micrometer is equipped with a series of easily interchangeable anvils, thus providing the full range in steps of 1" or 25mm with a single micrometer. Suitable wrenches are furnished to make necessary adjustments.

These larger sizes have .300" (7.6mm) anvil and spindle diameters for ease of use on larger work.

224, 224M, 224.1, 24.1M Interchangeable Anvil Micrometers

With Ratchet Stop, Lock Nut, In Case				
Cat. No.	EDP	Range	Graduation	234 Standards Furnished
224AARLZ	50770	0-4"	.001"	1", 2", 3"
224ARLZ	50772	2-6"		2", 3", 4", 5"
224.1BRLZ	72700	6-9"		6", 7", 8"
224.1GRLZ	72704	6-12"		6", 7", 8", 9", 10", 11"
224.1CRLZ	72701	9-12"		9", 10", 11"
224.1DRLZ	72702	12-16"		12", 13", 14", 15"
224.1ERLZ	72703	16-20"		16", 17", 18", 19"
224.1JRLZ	72705	20-24"		20", 21", 22", 23"
224MAARLZ	50771	0-100mm	0.01mm	25, 50, 75mm
224MARLZ	50773	50-150mm		50, 75, 100, 125mm
224.1MGRLZ	72708	150-300mm		150, 175, 200, 225, 250, 275mm
224.1MDRLZ	72706	300-400mm		300, 325, 350, 375mm
224.1MERLZ	72707	400-500mm		400, 425, 450, 475mm
224.1MJRLZ	72709	500-600mm		500, 525, 550, 575mm

Micrometer furnished in attractive, protective case.

Readability features

- Starrett satin chrome finish – no glare – resists rust
- Advanced sleeve design with staggered lines and distinct figures for precise and easy readability
- Large thimble diameter with distinct figures

Ease-of-Handling Features

- Balanced frame and thimble design ensure easy handling and better readability
- Ring-type knurled lock nut for quick and sure locking
- Combination ratchet and speeder for uniform pressure and quicker adjustment

Accuracy and Long-Life Features

- Rigid and stable special cast iron frame with appropriate perforations for lightness and ribbed for strength and stability
- Extremely hard and stable one-piece spindle (the heart of our accuracy)
- Quick and easy sleeve adjustment

224.1CRLZ

Anvil Micrometers

714 Electronic Interchangeable Anvil Outside Micrometers (with output)

0-24"/0-600MM

This micrometer is the same as our 224 Micrometers except that it has an electronic readout and the following extra features and benefits:

714 Electronic Interchangeable Anvil Micrometers With Standard Inch Graduations on Shell and Thimble					
Cat. No.	EDP	Range in	Approx. mm	Resolution in	mm
714AAFLZ	64427	0-4	0-101	.00005	0.001
714AFLZ	64428	2-6	51-152		
714BFLZ	64429	6-9	152-228		
714GFLZ	64430	6-12	152-305		
714CFLZ	64431	9-12	228-305	.0001	0.001
714DFLZ	64432	12-16	305-406		
714EFLZ	64433	16-20	406-508		
714JFLZ	64434	20-24	508-609		

714M Electronic Interchangeable Anvil Micrometers With Standard Millimeter Graduations on Shell and Thimble					
Cat. No.	EDP	Range mm	Approx. in	Resolution mm	in
714MEAAFLZ	66108	0-100	0-3.930	0.001	.00005
714MEAFLZ	66109	50-150	1.968-5.900		
714MEGFLZ	66111	150-300	5.900-11.810		
714MEDFLZ	66112	300-400	11.810-15.740	0.001	.0001
714MEEFLZ	66113	400-500	15.740-19.680		
714MEJFLZ	66110	500-600	19.680-23.620		

Cable Information for 714 and 714M Electronic Interchangeable Anvil Micrometers		
Part No.	EDP	Description
PT61963	66636	Computer Interface Cable Complete to PC (RS232C)
733SCKB	69888	USB cable to PC (In focused window)
733SCU	69898	USB cable to computer running SPC Data Collection Software
733SCM	69893	Connection to Multiplexer (7612, 7613 or RMS 2704)
PT61120	65446	One 3-Volt Battery CR2450

Adjusting wrenches furnished with each tool.
Micrometer furnished in protective case with 234 Standards.

Readability Features

- Large, right-sized, high-contrast LCD digital readout is easy to read and reduces errors
- Resolution – .00005" and 0.001mm
- Conventional inch or millimeter graduations standard
- Starrett no-glare satin chrome finish on thimble and sleeve

Accuracy and Long-Life Features

- One 3-volt battery furnished for dependable power and over one year's normal usage
- Automatic OFF after 30 minutes of nonuse

Full-Function Action Features

- Instant inch/millimeter conversion
- "ME" millimeter models will turn on in the millimeter mode after installation of a new battery
- Measurement HOLD button
- Ability to zero tool at any position
- Ability to retain and return to the true zero reading of the micrometer
- PRESET button to install any reading at any position
- Ability to install minimum and maximum limits
- Output data to Starrett SPC Plus hardware and software and to PCs
- Works well with Starrett DataSure® Wireless Data Collection Systems

714MEAAFLZ

714EFLZ

Tubular Micrometers

724 Tubular Bow Type Micrometers with Interchangeable Anvils

12-60"/300 -1500MM

These micrometers are made for more precise measurements on large outside dimensions. They provide perfect balance, sensitive feel, ease of handling, and less measuring effort due to their advanced tubular design. Frames are built of special steel formed to exacting tubular design specifications and welded by a carefully controlled process. This produces a hollow tubular frame of the lightest weight, extreme rigidity, and a standard coefficient of expansion.

Because of the interchangeable anvils, the 724 is well suited for diversified gaging and provides a wide range of measurement in steps of 1 inch or 25mm.

The micrometer head has a larger diameter anvil and spindle at .300" (7.6mm). This provides greater balance and larger bearing surface on the threads.

724 Tubular Bow Type Micrometers				
With Lock Nut, In Case				
Cat. No.	EDP	Range (in)	Graduation	234 Standards Furnished
724LZ-18	52994	12-18	.001"	12", 13", 14", 15", 16", 17"
724LZ-24	52995	18-24		18", 19", 20", 21", 22", 23"
724LZ-30	52996	24-30		25", 27", 29"
724LZ-36	52997	30-36		31", 33", 35"
724LZ-42	52998	36-42		37", 39", 41"
724LZ-48	52999	42-48		43", 45", 47"
724LZ-54	53000	48-54		49", 51", 53"
724LZ-60	53001	54-60		55", 57", 59"
724M Tubular Bow Type Micrometers				
With Lock Nut, In Case				
Cat. No.	EDP	Range (mm)	Graduation	234 Standards Furnished
724MLZ-450	64318	300-450	0.01mm	300, 325, 350, 375, 400, 425mm
724MLZ-600	64319	450-600		450, 475, 500, 525, 550, 575mm
724MLZ-750	64320	600-750		625, 675, 725mm
724MLZ-900	64321	750-900		775, 825, 875mm
724MLZ-1050	64322	900-1050		925, 975, 1025mm
724MLZ-1200	64323	1050-1200		1075, 1125, 1175mm
724MLZ-1350	64324	1200-1350		1225, 1275, 1325mm
724MLZ-1500	64325	1350-1500		1375, 1425, 1475mm

Adjusting wrenches furnished with each tool.
Furnished with 234 Standards in attractive, protective case.

Readability Features

- Starrett satin chrome finish – no glare – resists rust
- Advanced sleeve design with staggered lines and distinct figures for precise and easy readability
- Large thimble diameter with distinct figures

Ease-of-Handling Features

- Balanced frame and thimble design for easy handling and better readability
- Ring-type knurled lock nut for quick and sure locking
- Hollow tubular frame design combining lightest possible weight with rigidity

Accuracy and Long-Life Features

- Extremely hard and stable one-piece spindle (the heart of our accuracy)
- Standards with insulated grips
- It is recommended that these micrometers be checked with standards in the approximate position (vertical or horizontal) that they will be used. We do not recommend .0001" or 0.001mm readings on these micrometers.Larger sizes, carbide faces and ratchet stop are available on special order.

724LZ-18

Tubular Micrometers

736 Tubular Bow Type Micrometers with Fixed Anvil

12-30"/300-750MM

This micrometer is similar to the 724 Micrometer. All features are identical to the 724, except that it has a fixed anvil, and is furnished in inch and millimeter sizes from 12-30" and 25mm increments from 300-750mm.

Order by catalog number and range through our Special Order Department. Example: 736LZ-28 (this orders a micrometer with a 27-28" range with lock nut and standard, in an attractive, protective case.)

A fixed anvil makes it easier to gage an outside diameter because the balance of the gage is proportional to the part being measured.

Readability Features

- Starrett satin chrome finish – no glare – resists rust
- Advanced sleeve design with staggered lines and distinct figures for precise and easy readability
- Large thimble diameter with distinct figures

Ease-of-Handling Features

- Balanced frame and thimble design ensure easy handling and better readability
- Ring-type knurled lock nut for quick and sure locking

Accuracy and Long-Life Features

- Hollow tubular frame design combining lightest possible weight with rigidity
- Extremely hard and stable one-piece spindle (the heart of our accuracy)
- 234 Standards furnished with micrometers

736LZ-31

Ultralight "C" Frame Gages

Rigid honeycomb aluminum diameter gage weighs five times less than solid frame gages. Unit shown has interchangeable anvils for 36-42" range. The gage is used as a dial indicator snap gage set to produce nominal dimension, or as an indicating micrometer. The micrometer head with .0001" graduations and the .0005" dial indicator ensure quick, accurate readings.

Ultralights are available from 24-72" (600-1800mm) I.D. or O.D. and can be designed for up to 72" (1800mm) throat depth for thickness measurement.

Micrometer Stands

3206 Outside Micrometer Stand

- This stand converts outside micrometers to a sturdy bench gage for batch inspection of small parts
- Useful as a handy bench vise or assembly fixture
- Gripping surfaces are two nylon pads which are replaceable
- Ball joint construction allows head to be positioned as much as 30° off perpendicular in any direction
- Positive lock on the base
- Base dimension is 6-3/8" long x 3-1/2" wide x 3/4" thick (162mm long x 89mm wide x 19mm thick)
- Tilting head clamping capability is 3/4" (19mm) thick x 1" (25mm) throat depth
- Accommodates all Starrett 1/2" (13mm) and 1" (25mm) outside micrometers, 2 and 2A 2" outside micrometers and 210, 220, 430, 483, 485 and 569 Special Purpose Outside Micrometers

3206 Outside Micrometer Stand		
Cat. No.	**EDP**	**Description**
3206	68917	Outside Micrometer Stand

3206

Special Function Micrometers

Micrometer Head Speeds Gaging

Unique applications can require unique tools. Starrett is constantly building special tools in large and small quantities with unique functionality. Special function micrometers have unique frames, contacts, readouts, or other components that will meet your requirements. Quotations and a concept print for your application can be obtained by submitting a product drawing with the thickness dimension(s) circled to:

The L.S. Starrett Co.
Special Gage Division
121 Crescent Street
Athol, MA 01331-1915.

Special 436 Micrometer with dial indicator head. Range 3-4" (75-100mm). Other ranges also available.

Starrett can manufacture extra large micrometers, like this special 724 Micrometer of tubing type construction, range 72-78" (1800-1950mm), with interchangeable anvils.

Contacts

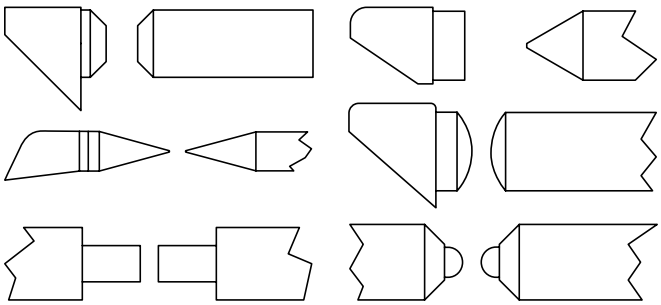

Special 725 Deep Throat Tubular Micrometer

With sliding, interchangeable anvils and locking lever, 7-1/2" (185mm) depth, 0-6" (0-150mm) range.

Special Function Micrometers

Throughout its history, The L.S. Starrett Company has manufactured a multitude of special hand tools and gages for thousands of customers in many different industries. Illustrated on these first two pages are typical examples of Starrett special toolmaking. The following pages show special function tools that we make as regular items because they are commonly used in industry.

Special toolmaking activities are coordinated under the direction of special order sales engineers who oversee each order from the time it is entered until shipment is made. Complete manufacturing facilities and engineering counsel are available.

Customers are invited to submit drawings and specifications for prompt quotation. Please direct these to the attention of:

The L.S. Starrett Company
Special Order Department
121 Crescent Street
Athol, MA 01331-1915

Mul-t-Anvil Micrometers

220 Mul-T-Anvil Micrometers

0-2"/0-50MM

This tool was a new development in micrometer design and patent is held by Starrett. This micrometer will handle a wide variety of measurements impossible to obtain with regular micrometers, such as measuring the wall thickness of tubing, cylindrical walls from a hole or slot to an edge, many hard-to-reach locations, and the thickness of screw heads, shoulder lengths, etc.

This micrometer can be furnished with .0001" graduations, but we recommend .001" or 0.01mm for easier and more accurate readings. The Starrett Company, with our years of experience, recommends this because the anvils on this type of tool are not backed up by a frame as in a regular micrometer and could bend slightly.

220 Mul-T-Anvil Micrometers with Round and Flat Anvils and Carbide Faced Spindle					
Ratchet Stop, Lock Nut		Friction Thimble, Lock Nut			
Cat. No.	EDP	Cat. No.	EDP	Range	Graduation
220XRL-1	66430	220XFL-1	50746	0-1"	.001"
220MXRL-25	65050			0-25mm	0.01mm
220ZZ-1	55209			Deluxe Case Only	
220M Mul-T-Anvil Micrometers With Round and Flat Anvils, Carbide Faced Spindle and 234B-1" or 234MB-25mm End Measuring Rod or Standard					
Ratchet Stop, Lock Nut		Friction Thimble, Lock Nut		Range	Graduation
Cat. No.	EDP	Cat. No.	EDP		
220XRL-2	66432	220XFL-2	66433	1-2"	.001"
220MXRL-50	66434			25-50mm	0.01mm
220ZZ-2	55210			Deluxe Case Only	

V-Anvil only: Order PT13017, EDP 71399
1" and 25mm models sent in fitted case.
2" and 50mm models packed one in a box without case.

Readability Features

- Starrett satin chrome finish – no glare – resists rust
- Advanced sleeve design with staggered lines and distinct figures for precise and easy readability
- Quick-reading figures – every thousandth numbered on inch tools

Ease-of-Handling Features

- Balanced frame and thimble design ensure easy handling, better readability
- Ring-type knurled lock nut for quick and sure locking
- A choice of friction thimble or combination ratchet/speeder for uniform pressure
- Interchangeable anvils are rigidly held in the vise type frame and quickly interchanged by a single lock screw adjustment
- Two hardened anvils furnished – round anvil approximately .120" diameter (3mm) and flat anvil approximately .125" (3mm) and .060" (1.5mm) thick
- "V" Anvil for measuring thickness of screw heads and shoulder lengths available separately
- Accommodates special anvils up to 5/16" (8mm) thick
- Can be used as a height gage by removing the vise jaw

Accuracy and Long-Life Features

- Rigid one-piece frame of drop forged steel
- Extremely hard and stable one-piece spindle (the heart of our accuracy)
- Quick and easy adjustment
- Tool is accurate to ± .0002" or ± 0.004mm

220XRL-2

Mul-t-Anvil Micrometers

790 Electronic Multi-Anvil Micrometers (with output)

0-1"/0-25MM

Same as our 220 Micrometer with electronic readout.

790 Electronic Multi-Anvil Micrometers with Standard Inch Graduations on Shell and Thimble with Round and Flat Anvils		
Cat. No.	**EDP**	**Description**
790AFL-1	64048	0-1"/0-25mm Range
790M Electronic Multi-Anvil Micrometers with Standard Millimeter Graduations on Shell and Thimble with Round and Flat Anvils		
Cat. No.	**EDP**	**Description**
790MEAFL-25	66071	0-25mm/0-1" Range
Cable Information		
Cat. No.	**EDP**	**Description**
733SCKB	69888	USB cable to PC (In focused window)
733SCU	69898	USB cable to computer running SPC Data Collection Software
733SCM	69893	Connection to Multiplexer (7612, 7613 or RMS 2704)
PT61963	66636	Computer Interface Cable Complete to PC (RS232C)
PT61120	65446	One 3-Volt Battery CR2450

790AFL

Readability Features

- Large LCD digital readout is easy to read and reduces errors
- Resolution – .00005" and 0.001mm
- Conventional inch or millimeter graduations standard
- Attractive no-glare black wrinkle finish on the frame
- Starrett no-glare satin chrome finish on thimble and sleeve

Accuracy and Long-Life Features

- One 3-volt battery furnished for over a year of normal usage
- Automatic OFF after 30 minutes of nonuse
- Tool is accurate to ± .0002" or ± 0.004mm

Full-Function Action Features

- Instant inch/millimeter conversion
- "ME" millimeter model will turn on in the millimeter mode after installation of a new battery
- Measurement HOLD button
- Ability to zero tool at any position
- Ability to retain and return to the true zero reading of the micrometer
- PRESET button to install any reading at any position
- Ability to install minimum and maximum limits
- Output data to Starrett SPC Plus hardware and software and to PCs
- Works well with Starrett DataSure® Wireless Data Collection Systems

Sheet Metal Micrometers

222 Sheet Metal Micrometers

0-1"/0-25MM

These micrometers reach over the edge of sheet metal and take measurements away from the edge toward the center. Also for other gaging jobs where a deep throat micrometer is needed. Rounded anvil on 1" (25mm) size gives a point contact for more accurate gaging; flat anvil is also available. The 1/2" and 13mm micrometers have satin chrome frames; 1" and 25mm micrometer frames have black wrinkle finish.

222 Sheet Metal Micrometers, 2" Throat Depth (0-1/2" Range)			
Cat. No.	**EDP**	**Anvil**	**Graduation**
222RL-1/2	50756	Flat	.001"
222XRL-1/2	50757	Flat	.001"
222 Sheet Metal Micrometers, 6" Throat Depth (0-1" Range)			
Cat. No.	**EDP**	**Anvil**	**Graduation**
222AXR-1	50762	Rounded	.001"
222BXR-1	50763	Flat	.001"
222M Sheet Metal Micrometers, 50mm Throat Depth (0-13mm Range)			
Cat. No.	**EDP**	**Anvil**	**Graduation**
222MRL-13	50758	Flat	0.01mm
222M Sheet Metal Micrometers, 150mm Throat Depth (0-25mm Range)			
Cat. No.	**EDP**	**Anvil**	**Graduation**
222MAXR-25	66435	Rounded	0.01mm
222MBXR-25	66436	Flat	0.01mm
Case for 222 and 222M Sheet Metal Micrometers			
Cat. No.	**EDP**	**Description**	
222ZZ-1	55212	Case for 222 Micrometers	

0-1" range and 0-25mm range micrometers sent with rounded anvil unless otherwise ordered.
Packed one in a box without case.

Readability Features

- Starrett satin chrome finish – no glare – resists rust
- Advanced sleeve design with staggered lines and distinct figures for precise and easy readability
- Convenient decimal equivalents on Inch tools

Ease-of-Handling Features

- Balanced frame and thimble design ensure easy handling and better readability
- Combination ratchet and speeder for uniform pressure and quicker adjustment
- Ring-type knurled lock nut for quick and sure locking (on 1/2" and 13mm range models)

Accuracy and Long-Life Features

- Rigid one-piece frame of drop forged steel, ribbed for strength and stability
- Extremely hard and stable one-piece spindle (the heart of our accuracy)
- Quick and easy adjustment

222AXR-1

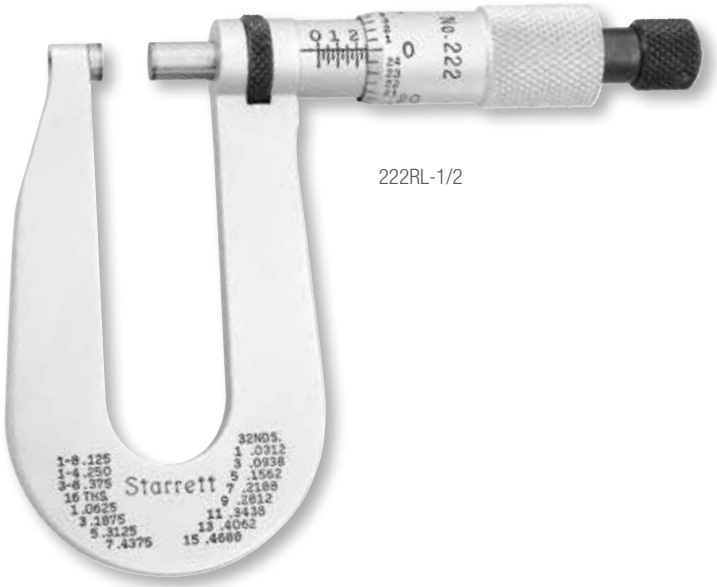

222RL-1/2

Sheet Metal Micrometers

764 Electronic Sheet Metal Micrometers (with output)

0-1"/0-25MM

This micrometer is the same as our 222 Micrometer, except that it has an electronic readout and is available in the 1" (25mm) and 25mm ranges. Rounded anvil gives a point contact for more accurate gaging; flat anvil also available.

764 Electronic Sheet Metal Micrometers, 6" Throat Depth with Standard Inch Graduations on Shell and Thimble		
Cat. No.	**EDP**	**Description**
764AXFL	66445	0-1"/0-25mm Range, Round Anvil
764BXFL	66525	0-1"/0-25mm Range, Flat Anvil
764M Electronic Sheet Metal Micrometers, 150mm Throat Depth with Standard Millimeter Graduations on Shell and Thimble		
Cat. No.	**EDP**	**Description**
764MEAXFL	66446	0-25mm/0-1" Range, Round Anvil
Cable Information for 764 and 764M Electronic Sheet Metal Micrometers		
Part No.	**EDP**	**Description**
PT61963	66636	Computer Interface Cable Complete to PC (RS232C)
733SCKB	69888	USB cable to PC (In focused window)
733SCU	69898	USB cable to computer running SPC Data Collection Software
733SCM	69893	Connection to Multiplexer (7612, 7613 or RMS 2704)
PT61120	65446	One 3-Volt Battery CR2450

Packed one in a box without case.

764AXFL

Readability Features

- Large, right-sized, high-contrast LCD digital readout is easy to read and reduces errors
- Resolution: .00005" and 0.001mm
- Conventional inch or millimeter graduations standard
- Attractive no-glare black wrinkle finish on the frame
- Starrett no-glare satin chrome finish on thimble and sleeve

Accuracy and Long-Life Features

- One 3-volt battery furnished for over a year of normal usage
- Automatic OFF after 30 minutes of nonuse

Full-Function Action Features

- Instant inch/millimeter conversion
- "ME" millimeter model will turn on in the millimeter mode after installation of a new battery
- Measurement HOLD button
- Ability to zero tool at any position
- Ability to retain and return to the true zero reading of the micrometer
- PRESET button to install any reading at any position
- Ability to install minimum and maximum limits
- RS232 data output port
- Works well with Starrett DataSure® Wireless Data Collection Systems

Tube Micrometers

569 Tube Micrometers

0-1"/0-25MM

For measuring the wall thickness of tubing and other parts with cylindrical walls. Also for measuring from a hole to an edge (note minimum hole sizes in table). Rigid steel "half" frame with smooth black enamel finish. Anvil diameter = 0.185".

Readability Features

- Starrett satin chrome finish – no glare – resists rust
- Advanced sleeve design with staggered lines and distinct figures for precise and easy readability
- Convenient decimal equivalents on inch tools

Ease-of-Handling Features

- Balanced frame and thimble design ensure easy handling and better readability

Accuracy and Long-Life Features

- Rigid steel frame ribbed for strength and stability
- Extremely hard and stable one-piece spindle (the heart of our accuracy)
- Quick and easy adjustment

569 Tube Micrometers (0-1" Range)				
Cat. No.	**EDP**	**Graduation**	**Minimum Hole Size**	**Description**
569AXP	66437	.001"	3/16"	Carbide Faced Spindle
569BXP	66439		3/8"	Carbide Faced Spindle
569M Tube Micrometers (0-25mm Range)				
Cat. No.	**EDP**	**Graduation**	**Minimum Hole Size**	**Description**
569MAXP	66438	0.01mm	4.8mm	Carbide Faced Spindle
569MBXP	66440		9.5mm	Carbide Faced Spindle
Deluxe Case for 569 and 569M Tube Micrometers				
Cat. No.	**EDP**	**Description**		
910	55397	Deluxe case only for the 569		

Special anvils also can be furnished, priced on application. Sent in fitted case.

569AXP

769 Electronic Tube Micrometers (with output)

0-1"/0-25MM

This micrometer is the same as our 569 with an electronic readout and the following additional features and benefits:

Readability Features

- Large LCD digital readout is easy to read and reduces errors
- Resolution: .00005" and 0.001mm
- Conventional inch or millimeter graduations standard
- Attractive no-glare black wrinkle finish on the frame
- Starrett no-glare satin chrome finish on thimble and sleeve

Accuracy and Long-Life Features

- One 3-volt battery furnished for over a year of normal usage
- Automatic OFF after 30 minutes of nonuse

Full-Function Action Features

- Instant inch/millimeter conversion
- "ME" model turns on in millimeter mode after battery installation
- Measurement HOLD button
- Ability to zero tool at any position
- Ability to retain and return to the true zero reading of the micrometer
- PRESET button to install any reading at any position
- Ability to install minimum and maximum limits
- RS232 data output port
- Works well with Starrett DataSure® Wireless Data Collection Systems

769 Electronic Tube Micrometers, Standard Inch Graduations		
Cat. No.	**EDP**	**Description**
769AXFL	66447	0-1"/0-25mm Range, Carbide Faced Spindle
769 Electronic Tube Micrometers, Standard Millimeter Graduations		
Cat. No.	**EDP**	**Description**
769MEAXFL	66448	0-25mm/0-1" Range, Carbide Faced Spindle
Cable Information for 769 Electronic Tube Micrometers		
Part No.	**EDP**	**Description**
PT61963	66636	Computer Interface Cable Complete to PC (RS232C)
733SCKB	69888	USB cable to PC (In focused window)
733SCU	69898	USB cable to computer running SPC Data Collection Software
733SCM	69893	Connection to Multiplexer (7612, 7613 or RMS 2704)
PT61120	65446	One 3-Volt Battery CR2450

769MEAXFL

Crankshaft Micrometers

436 Automotive Micrometers

1-1/2– 3-1/2"/38-88MM

This micrometer is designed for automotive work and especially for crankshaft measuring. It is also well suited for all other work within its capacity. It measures the diameter of the journal bearing and main bearing of most crankshafts since the micrometer has a range from 1-1/2" (38mm) – 3-1/2" (88mm).

436-3 1/2 Automotive Crankshaft Micrometers (1-1/2 – 3-1/2" Range)		
Cat. No.	**EDP**	**Graduation**
T436RLS-3 1/2	65493	.0001"
436M-88 Automotive Crankshaft Micrometers (38-88mm Range)		
Cat. No.	**EDP**	**Graduation**
V436MRLS-88	65600	0.002mm
Case for 436-3 1/2 and 436M-88 Automotive Crankshaft Micrometers		
Cat. No.	**EDP**	**Description**
733ZZ-4	66139	Protective Case

Carbide measuring faces available on special order. Specify "X" after catalog number.

Readability Features

- Starrett satin chrome finish – no glare – resists rust
- Advanced sleeve design with staggered lines and distinct figures for precise and easy readability
- Quick-reading figures – every thousandth numbered on inch tools
- The reading point is on the under side of the sleeve, plainly visible while measuring. It's a very useful feature when measuring between webs.

Ease-of-Handling Features

- Balanced frame and thimble design ensure easy handling and better readability
- Ring-type knurled lock nut for quick and sure locking
- Combination ratchet and speeder for uniform pressure and quicker adjustment
- Gracefully designed tapered frame for use in narrow slots and tight places
- 2" (50mm) range
- 2-5/8" (66mm) throat depth

Accuracy and Long-Life Features

- Rigid one-piece frame of drop forged steel, ribbed for extra strength
- Extremely hard and stable one-piece spindle (the heart of our accuracy)
- Appropriate standard included

T436RLS-3 1/2

Micrometers

458 Automotive Disc Brake Micrometers

.300-2"/7.6-50MM

- Measures depth of wear grooves in disc of brake systems
- 3" (75mm) frame with a 3-1/2" (88mm) depth to allow additional reach
- Flat carbide spindle and a carbide anvil with a 60° point

Readability Features

- Starrett satin chrome finish – no glare – resists rust
- Advanced sleeve design for precise, easy readability
- Quick-reading figures – every thousandth numbered on inch tools

Ease-of-Handling Features

- Balanced frame and thimble design ensure easy handling and better readability
- Combination ratchet and speeder for uniform pressure and quicker adjustment
- Gracefully designed tapered frame for use in narrow slots and tight places
- 3-1/2" (88mm) throat depth

Accuracy and Long-Life Features

- Rigid one-piece steel frame
- Extremely hard and stable one-piece spindle (the heart of our accuracy)
- Carbide measuring face on the spindle and carbide "V" anvil
- Quick and easy adjustment

.300-2" Range			
Cat. No.	**EDP**	**Range**	**Graduation**
458AXR 458AXRS*	67534 67535	.300-1.300"	.001"
458BXR 458BXRS*	67536 67537	1-2"	.001"
7.6-50mm Range			
Cat. No.	**EDP**	**Range**	**Graduation**
458MAXR 458MAXRS**	67538 67539	7.6-33mm	0.01mm
458MBXR 458MBXRS**	67540 67541	25-50mm	0.01mm

*With 26852-0 Gage Block Standard.
**With 26853-0 Gage Block Standard.

458AXRS

260 Groove Micrometers

INCH/MM

Quickly and easily measures widths of internal or external grooves and lands.

Readability Features

- Starrett satin chrome finish – no glare – resists rust
- Advanced sleeve design with staggered lines and distinct figures for precise and easy readability
- Quick-reading figures – every thousandth numbered on inch tools

Ease-of-Handling Features

- Balanced design to ensure easy handling and better readability
- Has a reach of 1-5/8" (41mm) maximum hole depth
- Each measuring disc is 9/32" (7mm) diameter and .025" (0.63mm) thick
- Will measure groove widths .050-1.050" (1.27-26.6mm)
- Will measure land widths from 0-1" and 0-25mm

Accuracy and Long-Life Features

- Extremely hard and stable one-piece spindle (the heart of our accuracy)
- Hardened, ground, and lapped measuring discs
- Quick and easy adjustment
- This tool is accurate to ±.0004" or ±0.01mm

260 and 260M Groove Micrometer					
			Range		
Cat. No.	**EDP**	**Graduation**	**Groove Widths***	**Land Widths**	**Max. Hole Depth**
260Z	67987	.001"	.050"-1.050"	0-1.000"	1-5/8"
260MZ	67988	0.01mm	1.27-26.27mm	0-25mm	41mm

* Add .050" to 260Z (1.27mm to 260MZ) micrometer reading.

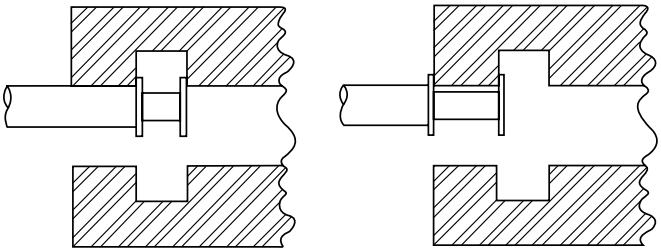

Paper Thickness Micrometers

223 Paper Gage Micrometers

0-11/32"/0-8.75MM

This micrometer is designed for use in paper mills, printing shops, paper warehouses, rubber plants, etc. for accurately, quickly measuring the thickness of paper, cardboard, chipboard, rubber, plastics, and other similar products, up to 11/32" (8.75mm).

223 and 223M Paper Gage Micrometers (0-11/32"/0-8.75mm Range)		
Cat. No.	**EDP**	**Graduation**
223RL	50768	.001"
223MRL	64336	0.01mm
Case for 223 Paper Gage Micrometers		
Cat. No.	**EDP**	**Description**
921	55213	Protective Case

Readability Features

- Starrett satin chrome finish – no glare – resists rust
- Advanced sleeve design with staggered lines and distinct figures for precise and easy readability
- Convenient decimal equivalents on inch tool

Ease-of-Handling Features

- Balanced frame and thimble design ensure easy handling and readability
- Ring-type knurled lock nut for quick and sure locking
- Combination ratchet and speeder for uniform pressure and quick adjustment
- Anvil and spindle faces are 7/16" (11mm) diameter to prevent compressing the material being measured and to ensure accurate readings
- The floating anvil automatically adjusts itself to any surface condition
- Convenient finger-holding ring is also provided

Accuracy and Long-Life Features

- Rigid one-piece frame of drop forged steel
- Extremely hard and stable one-piece spindle (the heart of our accuracy)
- Quick and easy adjustment

223RL

Blade Micrometers

486 Blade Type Micrometers with Non-Rotating Spindle

0-12"/0-150MM

Here is another special function Starrett micrometer. It is designed for fast and accurate measurements of circular form tools, diameter and depth of narrow grooves, slots, keyways, recesses, and depths between lands and fins.

486 Blade Type Micrometers (0-12" Range)			
Cat. No.	**EDP**	**Range**	**Graduation**
486P-1	52499	0-1"	.001"
486P-2	52501	1-2"	
486P-3	52503	2-3"	
486P-4	52505	3-4"	
486P-5	52507	4-5"	
486P-6	52509	5-6"	
486P-7	67094	6-7"	
486P-8	67095	7-8"	
486P-9	67096	8-9"	
486P-10	67097	9-10"	
486P-11	67098	10-11"	
486P-12	67099	11-12"	
486M Blade Type Micrometers (0-150mm Range)			
Cat. No.	**EDP**	**Range**	**Graduation**
486MP-25	64257	0-25mm	0.01mm
486MP-50	64258	25-50mm	
486MP-75	64259	50-75mm	
486MP-100	64260	75-100mm	
486MP-125	64261	100-125mm	
486MP-150	64262	125-150mm	

Readability Features

- Starrett satin chrome finish – no glare – resists rust
- Advanced sleeve design with staggered lines and distinct figures for precise and easy readability

Ease-of-Handling Features

- Speeder for quicker adjustment on all sizes
- Non-rotating spindle prevents blade from turning in narrow slots or rolling off shoulder
- The blades are .030" (0.8mm) thick
- Blades will measure to 5/16" (8mm) depths

Accuracy and Long-Life Features

- Rigid steel frame ribbed for extra strength on sizes through 6" (150mm)
- Extremely hard and stable one-piece spindle (the heart of our accuracy)
- Quick and easy adjustment

Cases for 486 and 486M Blade Type Micrometers		
Cat. No.	**EDP**	**Range**
913	55400	1", 25mm
922	55222	2", 50mm
952	55223	3", 75mm
953	55224	4", 100mm
954	55225	5", 125mm
930	55276	6", 150mm
931	55277	7", 175mm
932	55278	8", 200mm
933	55279	9", 225mm
934	55280	10", 250mm
935	55281	11", 275mm
436ZZ-13	55282	12", 300mm

Blade Micrometers

786 Electronic Micrometers with Non-Rotating Spindle (with output)

0-5"/0-125MM

This micrometer is the same as our 486 with electronic readout and the following additional features:

786 Electronic Blade-Type Micrometers with Standard Inch Graduations on Shell and Thimble					
Cat. No.	EDP	Range in	Approx. mm	Resolution in	mm
786P-1	65225	0-1	0-25.4	.00005"	0.001mm
786P-2	65226	1-2	25.4-51		
786P-3	65227	2-3	51-76		
786P-4	65228	3-4	76-101		
786P-5	65229	4-5	101-127	.0001"	0.001mm

786 Electronic Blade-Type Micrometers with Standard Millimeter Graduations on Shell and Thimble					
Cat. No.	EDP	Range mm	Approx. in	Resolution mm	in
786MEP-25	66118	0 - 25mm	0-.984"	0.001mm	.00005"
786MEP-50	66126	25 - 50mm	.984-1.968"		
786MEP-75	66127	50 - 75mm	1.968-2.950"		
786MEP-100	66128	75 - 100mm	2.950-3.930"		
786MEP-125	66129	100 - 125mm	3.930-4.920"		

Cable Information for 786 Electronic Blade-Type Micrometers		
Part No.	EDP	Description
733SCKB	69888	USB cable to PC (In focused window)
733SCU	69898	USB cable to computer running SPC Data Collection Software
733SCM	69893	Connection to Multiplexer (7612, 7613 or RMS 2704)
PT61963	66636	Computer Interface Cable Complete to PC (RS232C)
PT61120	65446	One 3-Volt Battery CR2450

Attractive, protective case available by ordering 733ZZ and one size larger than the micrometer. Example: For 786P-2, order 733ZZ-3.

Readability Features

- Large LCD digital readout is easy to read and reduces errors
- Conventional inch or millimeter graduations standard
- Attractive no-glare black wrinkle finish on the frame
- Starrett no-glare satin chrome finish on thimble and sleeve

Accuracy and Long-Life Features

- One 3-volt battery furnished for over a year of normal usage
- Automatic OFF after 30 minutes of nonuse

Full-Function Action Features

- Instant inch/millimeter conversion
- "ME" millimeter models will turn on in the millimeter mode after installation of a new battery
- Measurement HOLD button
- Ability to zero tool at any position
- Ability to retain and return to the true zero reading of the micrometer
- PRESET button to install any reading at any position
- Ability to install minimum and maximum limits
- RS232 data output port
- Works well with Starrett DataSure® Wireless Data Collection Systems

786P-2

Disc-Type Micrometers

256 with Rotating or Non-Rotating Spindles

0-3"/0-75MM

These tools are used to measure the thickness of work sections such as ribs, lands, fins, cutting edges on form tools, and chordal thickness of gear teeth. Because of their large anvil and spindle faces, the 1" and 25mm sizes are also useful for measuring the thickness of sheet materials like paper, cardboard, rubber, and plastics.

256 Disc-Type Micrometers (.001" Graduation)		
Cat. No.	**EDP**	**Range**
256RL-1	51236	0-1"
256PN-1	56469	0-1"
256RL-2	55940	1-2"
256RL-3	55941	2-3"
256M Disc-Type Micrometers (0.01mm Graduation)		
Cat. No.	**EDP**	**Range**
256MRL-25	51238	0-25mm
256MPN-25	56470	0-25mm
256MRL-50	55942	25-50mm
256MRL-75	55943	50-75mm
Cases for 256 and 256M Disc-Type Micrometers		
Cat. No.	**EDP**	**Description**
910	55397	Deluxe case for 1" and 25mm micrometers
912	55399	Deluxe case for 2" and 50mm micrometers
922	55222	Deluxe case for 3" and 75mm micrometers

Readability Features

- Starrett satin chrome finish – no glare – resists rust
- Advanced sleeve design with staggered lines and distinct figures for precise and easy readability
- Quick-reading figures – every thousandth numbered on inch tools
- Convenient decimal equivalents on 1" and 2" reading tools

Ease-of-Handling Features

- Balanced frame and thimble design ensure easy handling and better readability
- Ring-type knurled lock nut for quick and sure locking
- The combination ratchet and speeder for uniform pressure and quicker adjustment on all sizes
- Gracefully designed tapered frame for use in narrow slots and tight places
- Anvil and spindle discs are 1/2" (12.7mm) diameter tapering to .015" (0.4mm) edge thickness making it possible to enter narrow grooves and recesses
- Available in the 1" and 25mm sizes with rotating or non-rotating spindle

Accuracy and Long-Life Features

- Rigid one-piece frame of drop forged steel
- Extremely hard and stable one-piece spindle (the heart of our accuracy)
- Quick and easy adjustment
- Starrett workmanship
- This tool is accurate to ±.00015" or ± 0.003mm measuring over the whole surface and ±.0002" or ±0.004mm measuring on the edges

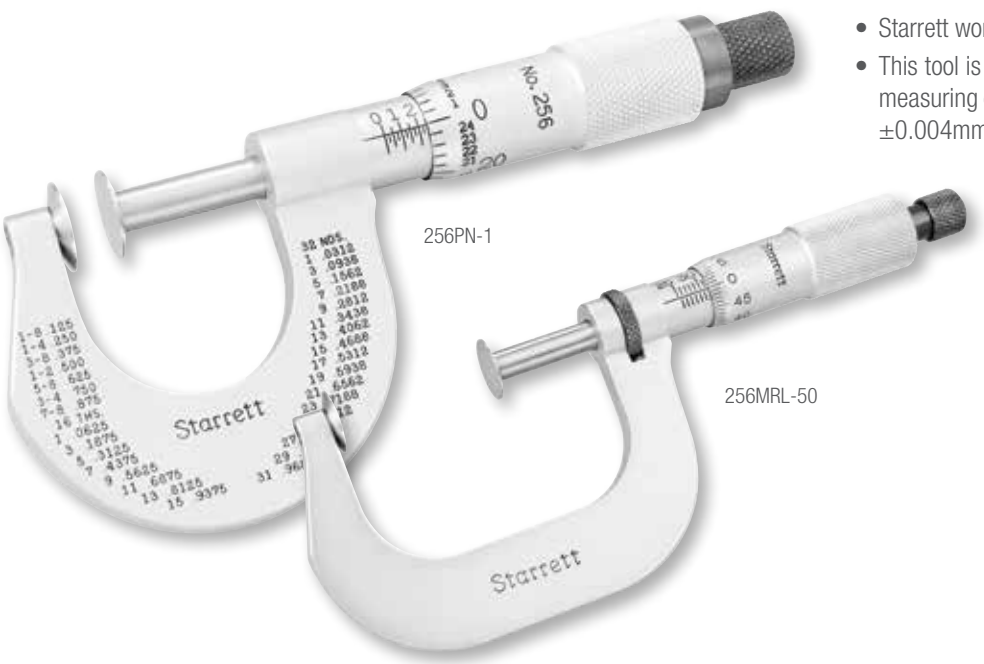

256PN-1

256MRL-50

Disc-Type Micrometers

756 Electronic Disc-Type Micrometer with Rotating Spindle (with output)

0-1"/0-25MM

The same as our 256 with an electronic readout and the following additional features and benefits:

756 Electronic Disc-Type Micrometer		
Cat. No.	**EDP**	**Description**
756FL-1	64042	0-1"/0-25mm range, with standard inch graduations on shell and thimble
756M Electronic Disc-Type Micrometer		
Cat. No.	**EDP**	**Description**
756MEFL-25	66134	0-25mm/0-1" range, with standard millimeter graduations on shell and thimble
Cable Information for 756 and 756M Electronic Disc-Type Micrometers		
Part No.	**EDP**	**Description**
733SCKB	69888	USB cable to PC (In focused window)
733SCU	69898	USB cable to computer running SPC Data Collection Software
733SCM	69893	Connection to Multiplexer (7612, 7613 or RMS 2704)
PT61963	66636	Computer Interface Cable Complete to PC (RS232C)
PT61120	65446	One 3-Volt Battery CR2450
Case for 756 and 756M Electronic Disc-Type Micrometers		
Cat. No.	**EDP**	**Description**
949	63874	Protective case

756FL-1

Readability Features

- Large, right-sized, high-contrast LCD digital readout is easy to read and reduces errors
- Resolution: .00005" and 0.001mm
- Conventional inch or millimeter graduations standard
- Attractive no-glare black wrinkle finish on the frame
- Starrett no-glare satin chrome finish on thimble and sleeve

Accuracy and Long-Life Features

- One 3-volt battery furnished for dependable power and over one year's normal usage
- Automatic OFF after 30 minutes of nonuse
- Anvil and spindle discs are 1/2" (12.7mm) diameter tapering to 0.15" (0.4mm) edge thickness making it possible to enter narrow grooves and recesses
- Tool is accurate to ±.00015" or ±0.003mm measuring over the whole surface and ±.0002" or ±0.004mm measuring on the edge

Full-Function Action Features

- Instant inch/millimeter conversion
- "ME" millimeter model will turn on in the millimeter mode after installation of a new battery
- Measurement HOLD button
- Ability to zero tool at any position
- Ability to retain and return to the true zero reading of the micrometer
- PRESET button to install any reading at any position
- Ability to install minimum and maximum limits
- RS232 data output port
- Works well with Starrett DataSure® Wireless Data Collection Systems

Rounded Anvil Micrometers

576, 577, 211 Micrometers

0-1/2"/0-13MM; 0-1"/0-25MM

These three micrometers are all extremely useful for measuring the wall thickness of parts such as solid and split bearings, tubing, sleeves, collars, rings, various cylinders, and also measuring from the inside of a hole to an edge. All three have a rounded anvil which contacts the inside curved surface and a flat spindle for contacting the outside of the work, thus producing single point contact. This permits accurate gaging of curved surface thickness in thousandths of an inch or hundredths of a millimeter.

Rounded anvils are also available on the 222 Sheet Metal Micrometer or by special order.

576, 577 and 211 Micrometers (0-1" Range)			
Cat. No.	**EDP**	**Range**	**Graduation**
576XR	66441	0-1/2"	.001"
577XP	66443	0-1"	
211XP	66428	0-1"	
576M and 577M Micrometers (0-25mm Range)			
Cat. No.	**EDP**	**Range**	**Graduation**
576MXR	66442	0-13mm	0.01mm
577MXP	66444	0-25mm	
Cases for 576, 576M, 577, 577M and 211 Micrometers			
Cat. No.	**EDP**	**Description**	
910	55397	Attractive protective case for 211 and 577 Micrometers	
921	55213	Attractive protective case for 576 Micrometers	

Ball Attachment 247 used for rounded anvil effect is also available for other standard micrometers.

Capacity

- The 576 can get into holes as small as 5/16 of an inch (8mm) and measure up to 1/2 inch (13mm)
- The 577 can get into holes as small as 3/8 of an inch (9.5mm) and measure up to 1 inch (25mm)
- The 211 can get into holes as small as 5/8 of an inch (16mm) and measure up to 1 inch (25mm)

Readability Features

- Starrett satin chrome finish – no glare – resists rust
- Advanced sleeve design with staggered lines and distinct figures for precise and easy readability
- Convenient decimal equivalents on inch tools

Ease-of-Handling Features

- Balanced frame and thimble design ensure easy handling and readability
- Gracefully designed tapered frame for narrow slots and tight places

Accuracy and Long-Life Features

- Rigid steel frames
- Extremely hard and stable one-piece spindle (the heart of our accuracy)
- Quick and easy adjustment

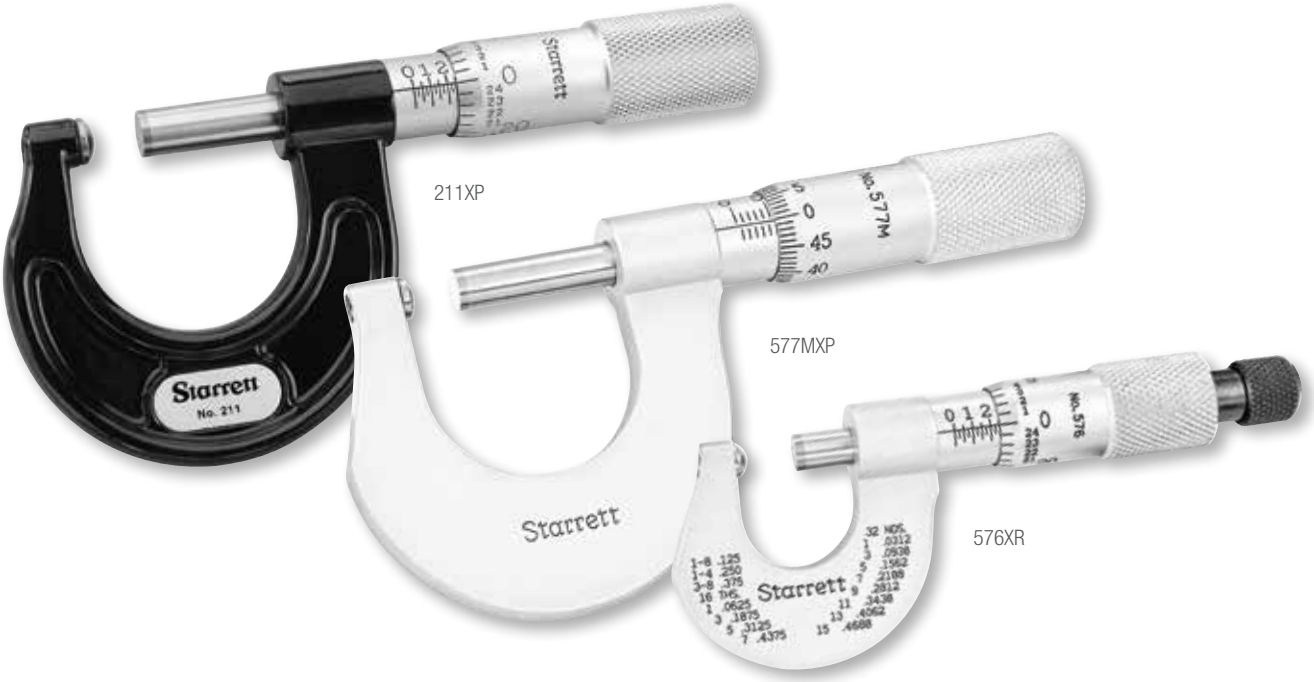

Micrometers

788 Electronic Micrometers with Rounded Anvil (with output)

0-1"/0-25MM

This micrometer is similar to our 211, except that it has an electronic readout and the following extra features and benefits:

788 and 788M Electronic Micrometers		
Cat. No.	**EDP**	**Description**
788XFL	66449	0-1"/0-25mm range, with standard inch graduations on shell and thimble
788MEXFL	66450	0-25mm/0-1" range, with standard millimeter graduations on shell and thimble
Cable Information for 788 Electronic Micrometers		
Part No.	**EDP**	**Description**
733SCKB	69888	USB cable to PC (In focused window)
733SCU	69898	USB cable to computer running SPC Data Collection Software
733SCM	69893	Connection to Multiplexer (7612, 7613 or RMS 2704)
PT61963	66636	Computer Interface Cable Complete to PC (RS232C)
PT61120	65446	One 3-Volt Battery CR2450
Case for 788 and 788M Electronic Micrometers		
Cat. No.	**EDP**	**Description**
949	63874	Case for 788 Micrometers

Readability Features

- Large, high-contrast LCD digital readout reduces errors
- Resolution: .00005" and 0.001mm
- Conventional inch or millimeter graduations standard
- Attractive no-glare black wrinkle finish on the frame
- Starrett no-glare satin chrome finish on thimble and sleeve

Accuracy and Long-Life Features

- One 3-volt battery furnished for dependable power and over one year's normal usage
- Automatic OFF after 30 minutes of nonuse

Full-Function Action Features

- Instant inch/millimeter conversion
- "ME" millimeter model will turn on in the millimeter mode after installation of a new battery
- Measurement HOLD button
- Ability to zero tool at any position
- Ability to retain and return to the true zero reading of the micrometer
- PRESET button to install any reading at any position
- Ability to install minimum and maximum limits
- RS232 data output port
- Works well with Starrett DataSure® Wireless Data Collection Systems

788XFL

Micrometers

205 Steel Mill Micrometer

0-1"

This micrometer is specially designed for gaging hot metal sheet in steel mills and has many features for safer, faster, and more accurate measurements. Micrometer has rugged construction throughout, and is attached to a convenient wooden handle, correctly shaped for a firm grip. Allows measurements to be made while the micrometer can be comfortably held at a safe distance from the hot metal.

Readability Features

- Starrett satin chrome finish – no glare – resists rust
- Advanced sleeve design with staggered lines and distinct figures for precise and easy readability
- Quick-reading figures – every thousandth numbered on inch tools
- Convenient decimal equivalents on inch tools
- Extra long bevel on thimble with heavy cut graduations

Ease-of-Handling Features

- Both spindle and anvil are beveled to easily slide onto the work
- Large, reversible wing lock nut is easy to lock or release, even when wearing heavy gloves
- Rugged frame construction and heavy duty spindle of .270" diameter

Accuracy and Long-Life Features

- Rigid one-piece frame of drop forged steel
- Extremely hard and stable one-piece spindle (the heart of our accuracy)
- Quick and easy adjustment by either the anvil or by a simple sleeve adjustment

205 Steel Mill Micrometer

Cat. No.	EDP	Range	Graduation	Description
205HL	50730	0-1"	.001"	Lock nut, with handle

247 Micrometer Ball Attachments

INCH/MM

Outside micrometers and micrometer heads having spindle sizes listed below can be instantly converted for measuring wall thickness of tubing, split and full bearings, sleeves and other parts with rounded surfaces by means of the 247 Ball Attachment.

Features

- Easily applied by snapping on to end of either anvil or spindle, thus permitting two attachments to be used together
- Balls are hardened, measure .200" and 5mm in diameter, and move freely in the retainer, insuring positive contact with anvil and spindle
- The diameters, .200" or 5mm, of each ball used must be subtracted from the micrometer reading
- All metal construction

247 Micrometer Ball Attachments, .200" Diameter Balls

Cat. No.	EDP	Description
247A	51174	For 2, 226 (old style), 230 and 577 Micrometers and 263 Micrometer Heads, .235" diameter Anvil and Spindle
247B	51175	For 224A, 224AA and 436 Micrometers, .270" diameter anvil and spindle
247C	51176	For 232 Micrometers and 463 Micrometer Heads, .200" diameter anvil and spindle
247D	51177	For 216, 226 (new style), 231, 436.1, 733, 795, 796, 3732, 1212 and 1230 Micrometers, .250" diameter anvil and spindle
247E	51178	For 224B through J, 238, 239, 436 Micrometers and 663 Micrometer Heads, .300" diameter anvil and spindle

247M Micrometer Ball Attachments, 5mm Diameter Balls

Cat. No.	EDP	Description
247MA	51179	For 2M and 230M Micrometers and 263M Micrometer Heads, 6mm diameter anvil and spindle
247MB	51180	For 436M Micrometers, 6.8mm diameter anvil and spindle
247MD	56691	For 216M and 436.1M Micrometers, 6.35mm diameter anvil and spindle
247ME	56692	For 224MB through J, 238M, 436M Micrometers and 663M Micrometer Heads, 7.6mm diameter anvil and spindle

205HL

247A

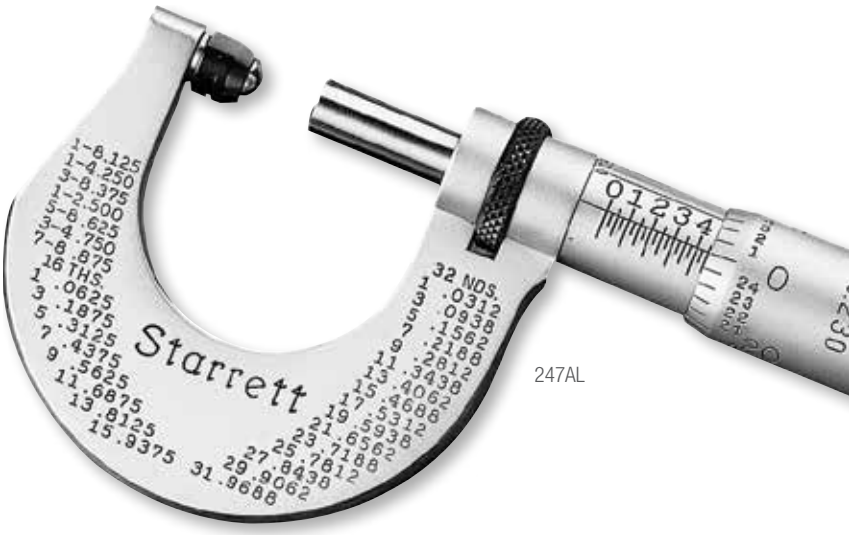

247AL

Screw Thread Micrometers

575, 585 Micrometers for Measuring Pitch Diameter

0-1"/0-25MM; 1-2"/25-50MM

These micrometers have a pointed spindle and a double V-anvil, both shaped to contact the screw thread as shown in the drawing. The micrometer reading therefore gives the pitch diameter.*

575 and 585 Screw Thread Micrometers (.001" Graduation)			
Cat. No.	**EDP**	**Range, Threads Per inch**	**Capacity, Pitch Diameter**
575AP	56159	7-9	0-1"
575BP	56160	10-13	
575CP	56161	14-18	
575DP	56162	20-24	
575EP	56163	28-30	
575FP	56164	32-40	
585AP	56165	4 1/2 - 6	1-2"
585BP	56166	7-9	
585CP	56167	10-13	
585DP	56168	14-18	
585EP	56169	20-24	
585FP	56170	28-30	
575M and 585M Screw Thread Micrometers (0.01mm Graduation)			
Cat. No.	**EDP**	**Range, Pitch in mm**	**Capacity, Pitch Diameter**
575MAP	56321	3-4	0-25mm
575MBP	56322	2-2.5	
575MCP	56323	1.25-1.75	
575MDP	56324	0.75-1	
575MEP	56325	0.5-0.7	
575MFP	56326	0.35-0.45	
585MAP	56327	4.5-6	25-50mm
585MBP	56328	3-4	
585MCP	56329	2-2.5	
585MDP	56330	1.25-1.75	
Cases			
Cat. No.	**EDP**	**Description**	
910	55397	Attractive protective case for 575	
912	55399	Attractive protective case for 585	

Swivel anvil available on special order – also in capacities over 2" (50mm).
575 sent in fitted case.
585 packed one in a box without case.

Readability Features

- Starrett satin chrome finish – no glare – resists rust
- Advanced sleeve design with staggered lines and distinct figures for precise and easy readability
- Decimal equivalents on inch tools

Ease-of-Handling Features

- Balanced frame and thimble design for easy handling and better readability
- Gracefully designed tapered frame for use in narrow slots and tight places
- Furnished with fixed (non-rotating) anvil, but swivel anvils available on special order
- Available in capacity over 2" or 50mm (special order)

Accuracy and Long-Life Features

- One-piece frame of drop forged steel
- Extremely hard and stable one-piece spindle (the heart of our accuracy)
- Quick and easy adjustment
- Design allows 50% to 75% contact with the thread to be measured, thereby insuring contact with the pitch diameter at all times
- Design also ensures against contact with the root area of the thread
- Tools are accurate to ±.0002" or 0.004mm

575 and 585 – Inch

For measuring American Unified National series and Unified J series screw threads. 585 micrometers come with a one-inch standard at no extra cost.

575M and 585M – Metric

For measuring I.S.O. metric and MJ screw threads. 585M micrometers come with a 25mm standard at no extra cost.

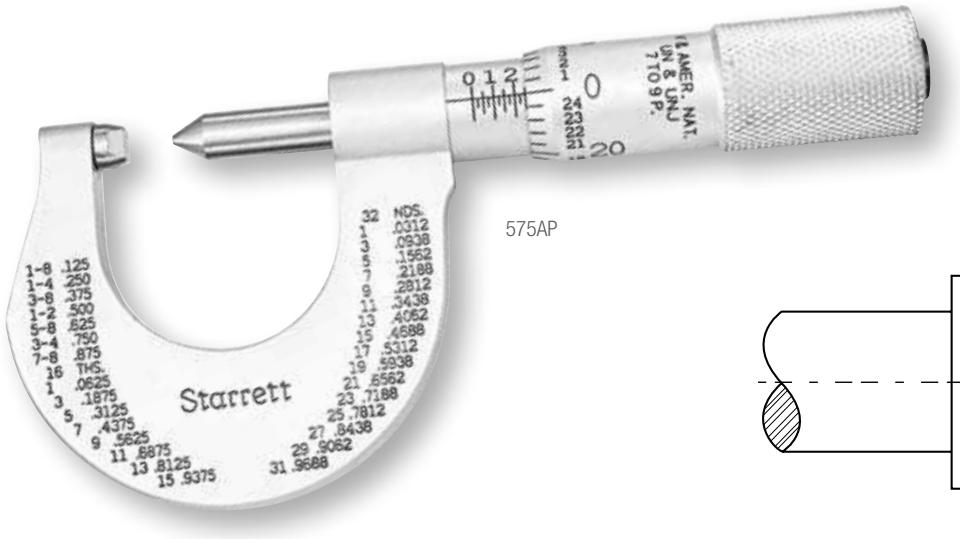

575AP

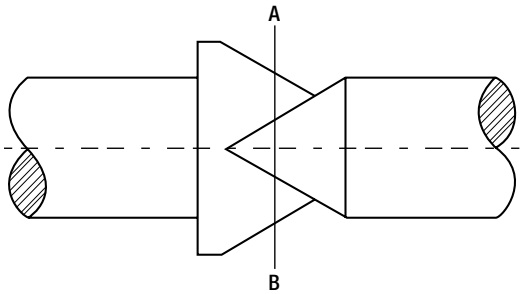

* **MEASURING TIP**: These tools are accurate for general purposes, especially if set to a thread plug gage of the size to be measured.

With the 575AP 0-1", pitch diameter is read directly in inches, since the line AB corresponds to the 0 reading.

Point Micrometers

210 Screw Thread Comparator Micrometers

0-7/8"/0-22MM

This micrometer is ideal for quick comparisons of thread accuracy in screw cutting operations, measuring in small grooves or recesses where regular micrometers cannot be used, and for many other applications.

NOTE: Does not measure pitch diameter. For such measurements, 575 or 585 Thread Micrometers are recommended.

Readability Features

- Starrett satin chrome finish – no glare – resists rust
- Advanced sleeve design with staggered lines and distinct figures for precise and easy readability
- Convenient decimal equivalents on inch reading tools

Ease-of-Handling Features

- Balanced frame and thimble design ensure easy handling and better readability
- Gracefully designed tapered frame for narrow slots and tight places

Accuracy and Long-Life Features

- Rigid steel frame
- Extremely hard and stable one-piece spindle (the heart of our accuracy)
- The 210 has 60° conical anvil and spindle faces with 1/64" (0.4mm) flats on the ends of the points
- Quick and easy adjustment

210 and 210M Screw Thread Comparator Micrometers (0-7/8" Range)			
Cat. No.	**EDP**	**Range**	**Graduation**
210AP	50731	0-7/8"	.001"
210MAP	64334	0-22mm	0.01mm

Case for 210 and 210M Screw Thread Comparator Micrometers		
Cat. No.	**EDP**	**Description**
910	55397	Attractive protective case

760 Electronic Screw Thread Comparator Micrometer (with output)

0-1"/0-25MM

Same features as our 210 with electronic readout and the following additional features and benefits:

Readability Features

- Large LCD digital readout is easy to read and reduces errors
- Resolution: .00005" and 0.001mm
- Conventional inch or millimeter graduations standard
- Attractive no-glare black wrinkle finish on the frame
- Starrett no-glare satin chrome finish on thimble and sleeve

Accuracy and Long-Life Features

- One 3-volt battery furnished for over a year of normal usage
- Automatic OFF after 30 minutes of nonuse

Full-Function Action Features

- Instant inch/millimeter conversion
- "ME" millimeter model turns on in millimeter mode after battery installation
- Measurement HOLD button
- Zero tool at any position and return to true zero reading
- PRESET button to install any reading at any position
- Ability to install minimum and maximum limits
- RS232 data output port
- Works well with Starrett DataSure® Wireless Data Collection Systems

760 and 760M Electronic Screw Thread Comparator Micrometer		
Cat. No.	**EDP**	**Description**
760FL	64051	0-1"/0-25mm range, standard inch graduations on shell and thimble
760MEFL	66135	0-25mm/0-1" range, standard millimeter graduations on shell and thimble

Case for 760 and 760M Electronic Screw Thread Comparator Micrometers		
Cat. No.	**EDP**	**Description**
731ZZ-2	65163	Attractive protective case

Cable Information for 760 and 760M Electronic Screw Thread Comparator Micrometers		
Part No.	**EDP**	**Description**
733SCKB	69888	USB cable to PC (In focused window)
733SCU	69898	USB cable to computer running SPC Data Collection Software
733SCM	69893	Connection to Multiplexer (7612, 7613 or RMS 2704)
PT61963	66636	Computer Interface Cable Complete to PC (RS232C)
PT61120	65446	One 3-Volt Battery CR2450

Micrometers

483, 485 V-Anvil Micrometers

.093-2"/2-25MM | .078-1"

Used to check out-of-roundness from centerless grinding or other machining operations. Also used for measuring odd fluted taps, milling cutters, and reamers.

Readability Features

- Direct measuring of three and five-fluted tools
- Starrett satin chrome finish – no glare – resists rust
- Advanced sleeve design for precise and easy readability
- Quick-reading figures – every thousandth numbered on inch tools

Ease-of-Handling Features

- Balanced frame and thimble design ensure easy handling and readability
- Ring-type knurled lock nut for quick and sure locking
- Combination ratchet and speeder for uniform pressure and quick adjustment

Accuracy and Long-Life Features

- Rigid one-piece frame of drop forged steel
- Extremely hard and stable one-piece spindle (the heart of our accuracy)
- Carbide facing on spindle and anvils for extra long wear
- Quick and easy adjustment

225 Wire Micrometers

0-.400"/0-10MM

This is another regularly offered special function Starrett micrometer designed to measure diameter of wire up to .400" (10mm).

Readability Features

- Starrett satin chrome finish – no glare – resists rust
- Advanced sleeve design with staggered lines and distinct figures for precise and easy readability
- Quick-reading figures – every thousandth numbered on inch tools

Ease-of-Handling Features

- Smooth friction thimble for uniform pressure
- Hex body which stops the micrometer from rolling over when placed on a flat surface
- The throat is flat to support the wire when measuring
- The anvil and spindle extend below the flat surface

Accuracy and Long-Life Features

- Extremely hard and stable one-piece spindle (the heart of our accuracy)
- Quick and easy adjustment

483, 483M and 485 V-Anvil Micrometers

Cat. No.	EDP	Range	Graduation	No. of Flutes it will Measure
T483XRL-1	52491	.093-1"	.0001"	3
T483XRL-2	52494	1-2"	.0001"	3
T485XRL	52497	.078-1"	.0001"	5
483MXRL-25	56046	2-25mm	0.01mm	3
485MXRL	56047			5

Cases for 483, 483M and 485 V-Anvil Micrometers

Cat. No.	EDP	Description
939	55331	Attractive protective case for 1" and 25mm sizes
483ZZ-2	55332	Attractive protective case for 2" size

225 Wire Micrometers (0-.400" Range)

Cat. No.	EDP	Graduation
T225F	50814	.0001"

225M Wire Micrometers (0-10mm Range)

Cat. No.	EDP	Graduation
V225MF	64255	0.001mm

T225F

Micrometers

207, 208 Stainless Steel Can Seam Micrometers

207 and 208 Can Seam Micrometers are made of stainless steel and designed to measure the thickness and depth of can seams.

The 207 Micrometer is used to measure the seam at outside bottom edge of dome on top of aerosol cans. The 208 Micrometer is used to measure thickness of seam at top and bottom of flat-topped cans. The 208D Micrometer is used to measure thickness and depth of all standard can seams.

Readability Features

- Satin finish stainless steel – no glare – rust and stain resistant
- Advanced sleeve design with staggered lines and distinct figures for precise and easy readability
- Quick-reading figures – every thousandth numbered on inch tools

Ease-of-Handling Features

- The 207 has a snub nose which permits measuring aerosol type cans

Accuracy and Long-Life Features

- Extremely hard and stable one-piece spindle (the heart of our accuracy)
- Quick and easy adjustment

207 and 208 Stainless Steel Can Seam Micrometers (0-.375" Range)			
Cat. No.	**EDP**	**Graduation**	**Description**
207Z	56173		Snub nose for aerosol cans
208Z	56175	.001"	Without depth gage
208DZ	56176		With depth gage (.200" range)
207M and 208M Stainless Steel Can Seam Micrometers (0-9.5mm Range)			
Cat. No.	**EDP**	**Graduation**	**Description**
207MZ	64337		Snub nose for aerosol cans
208MZ	64338	0.01mm	Without depth gage
208MDZ	63191		With depth fage (5mm range)

Depth range on 208D is .200". Depth range on 208MD is 5mm.

207Z 208DZ

209 Can Curl Micrometers

0-.500"/0-12.5MM

The 209 features a special rest foot and finger ring for consistent measurement of the curl thickness on aerosol cans with 1" (25mm) diameter domed tops.

Readability Features

- Starrett satin chrome finish – no glare – resists rust
- Advanced sleeve design with staggered lines and distinct figures for precise and easy readability
- Quick-reading figures – every thousandth numbered on inch tools
- Convenient decimal equivalents on inch tools

Ease-of-Handling Features

- Balanced frame and thimble design ensure easy handling and better readability
- Ring-type knurled lock nut for quick and sure locking
- Combination ratchet and speeder for uniform pressure and quicker adjustment
- Finger ring for ease of measuring

Accuracy and Long-Life Features

- Special rest foot to locate the tool for higher repeatability
- Extremely hard and stable one-piece spindle (the heart of our accuracy)
- Quick and easy adjustment

209 Can Curl Micrometers (0-.500" Range)		
Cat. No.	**EDP**	**Graduation**
209RL	56473	.001"
209M Can Curl Micrometers (0-12.5mm Range)		
Cat. No.	**EDP**	**Graduation**
209MRL	64364	0.01mm

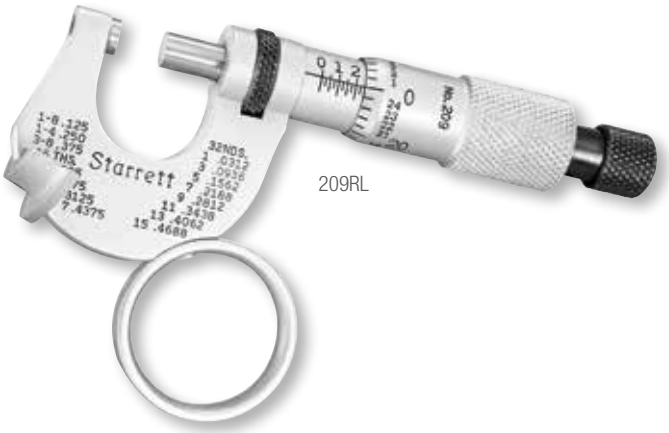

209RL

Micrometers

228 Hub Micrometer

0-1"

The 228 Hub Micrometer is an ideal tool for precision measuring of hub thickness, for insertion through small holes to measure thickness, and for many other related uses. Micrometer has a specially designed shallow frame which makes it possible to easily pass through a 3/4" (19mm) hole.

228 Hub Micrometer (0-1" Range)		
Cat. No.	**EDP**	**Graduation**
228XRL	50921	.001"
Case		
Cat. No.	**EDP**	**Description**
228ZZ	55228	Deluxe case for 228 Hub Micrometer

Readability Features

- Starrett satin chrome finish – no glare – resists rust
- Advanced sleeve design with staggered lines and distinct figures for precise and easy readability
- Quick-reading figures – every thousandth numbered on inch tools

Ease-of-Handling Features

- Balanced frame and thimble design ensure easy handling and better readability
- Ring-type knurled lock nut for quick and sure locking
- Combination ratchet and speeder for uniform pressure and quicker adjustment

Accuracy and Long-Life Features

- Rigid one-piece frame of drop forged steel
- Extremely hard and stable one-piece spindle (the heart of our accuracy)
- Quick and easy adjustment

228XRL

Micrometer Heads

The following pages show the full line of Starrett standard micrometer heads that have been designed and developed over the years working with the needs of our customers. The micrometer heads are invaluable for use on electronic equipment, machine tools, fixtures, special gaging and other equipment where precise movement and adjustment are required.

Dimensional specifications are available upon request.

Special features are described with each tool, but all of these tools have these features that benefit the user:

- Starrett satin chrome finish – no glare – resists rust on all reading surfaces
- Advanced sleeve design with staggered lines and distinct figures for precise and easy readability
- Quick-reading figures on all inch reading tools
- Extremely hard and stable one-piece spindle (the heart of our accuracy and long life)
- Micro-lapped measuring face for flatness and squareness
- Quick and easy adjustment

Special Heads

In addition to standard micrometer heads, Starrett has also designed and manufactured many special types of micrometer heads for widely diversified applications requiring micrometer accuracy in settings and adjustments. These special heads are designed to exact specifications for specialized usage with wave meters and other equipment in the electronics industry, machine tools, fixtures, special gages, tools, and all special mountings. They can be furnished to suit your particular requirements in a wide choice of sizes, range and graduations.

We design and build to your special need, so if you don't see what you want, please ask for it.

For quotations or recommendations, write:
The L.S. Starrett Co.
Special Order Department
121 Crescent Street
Athol, MA 01331

Micrometer Heads

261L Micrometer Heads with Non-Rotating Spindles

0-1/2"/0-13MM

Because the spindle does not rotate, these tools are useful in driving positioning tables directly without an intermediate connecting device. They are also useful in gaging jobs where scratches on the work surface cannot be tolerated or where there is risk of distortion when spindle meets work – as in measuring soft or elastic materials. Spindle wear is also reduced since there is no rotational friction as its face contacts the work.

- Ring-type lock nut for quick and sure locking at any setting
- A speeder for quicker adjustment – this is not a ratchet stop. The tool is dependent on your own "feel"

261L Micrometer Heads (0-1/2" Range)			
Cat. No.	**EDP**	**Graduation**	**Description**
261L	55944	.001"	Speeder, lock nut
261ML Micrometer Heads (0-13mm Range)			
Cat. No.	**EDP**	**Graduation**	**Description**
261ML*	64346	0.01mm	Specify clamping diameter (9.5mm or 10mm)

*9.5mm clamping diameter sent unless otherwise specified.

261L

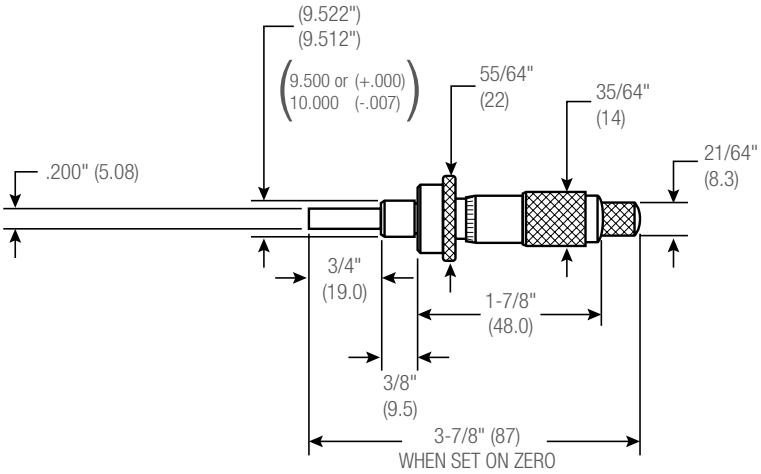

261L (0-1/2") and 261ML (0-13mm) dimensions

Micrometer Heads

262 Micrometer Heads with Non-Rotating Spindles

0-1"/0-25MM

Because the spindle does not rotate, this tool is useful in driving positioning tables directly without an intermediate connecting device. It is also useful in gaging jobs where scratches on the work surface cannot be tolerated, or where there is risk of distortion when spindle meets work – as in measuring soft or elastic materials. Spindle wear is also reduced, since there is no rotational friction when its face contacts the work.

- Ring-type lock nut for quick and sure locking at any setting
- Available with or without the combination ratchet and speeder for uniform pressure and quicker adjustment

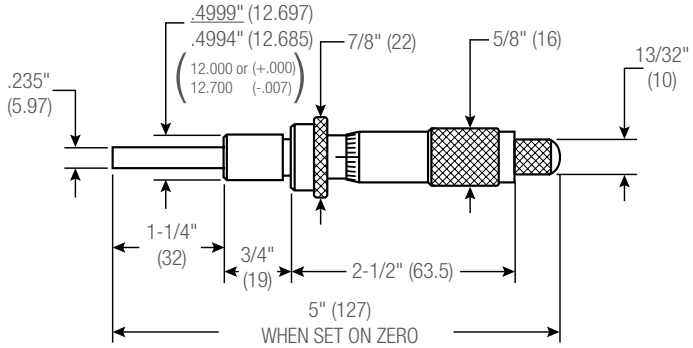

262L (0-1") and 262ML (0-25mm) dimensions

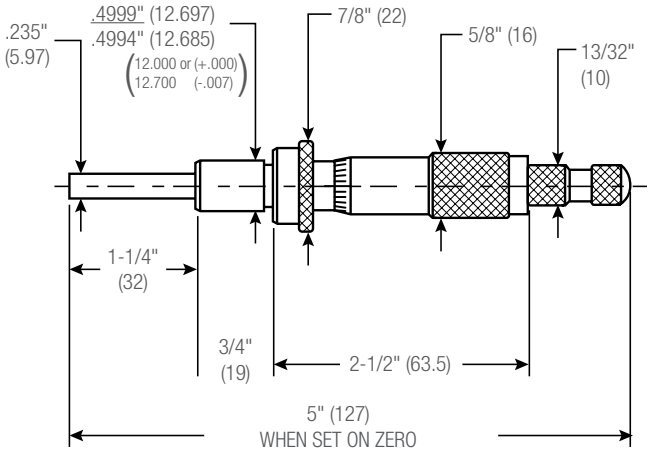

262RL (0-1") and 262MRL (0-25mm) dimensions

262 Micrometer Heads (0-1" Range)		
Cat. No.	**EDP**	**Graduation**
262L	55945	.001"
262RL	55946	
262M Micrometer Heads (0-25mm Range)		
Cat. No.	**EDP**	**Graduation**
262ML*	64347	0.01mm
262MRL*	65051	

0-25mm models specify clamping diameter 12mm or 12.7mm. 12.7mm sent unless otherwise ordered.

262L

Micrometer Heads

762 Electronic Micrometer Heads with Rotating or Non-Rotating Spindles (with output)

0-2"/0-50MM

Readability Features

- Large digital readout is easy to read, reducing errors
- Conventional inch or millimeter graduations standard
- Attractive black wrinkle finish on frame
- Starrett no-glare satin chrome finish on thimble and sleeve

Ease-of-Handling Features

- Ring-type knurled lock nut
- Smooth friction thimble for uniform pressure on regular heads and combination ratchet and speeder on non-rotating heads

Accuracy and Long-Life Features

- Extremely hard and stable one-piece spindle (the heart of our accuracy)
- One 3-volt battery furnished for over a year of normal usage
- Auto OFF after 30 minutes of nonuse

Full-Function Action Features

- Inch/millimeter conversion
- "ME" millimeter models turn on in millimeter mode after battery installation
- Measurement HOLD button
- Ability to zero tool at any position
- Ability to retain and return to the true zero reading of the micrometer
- PRESET button to install any reading at any position
- RS232 data output port
- Works well with Starrett DataSure® Wireless Data Collection Systems

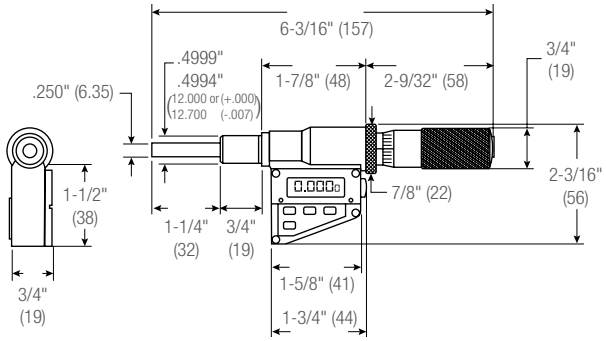

0-1" (0-25mm) dimensions

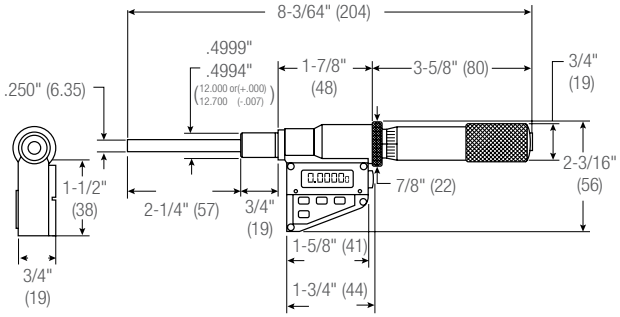

0-2" (0-50mm) dimensions

762MEXFL-25

762 Micrometer Specifications			
Resolution		Accuracy	
in	mm	in	mm
.00005	0.001	±.0001 per inch	±0.003 per 25mm

762 Electronic Micrometer Heads with Standard Inch Graduations on Shell and Thimble			
Cat. No.	EDP	Range	Description*
762XFL	65058	0-1"/0-25mm	Friction thimble, lock nut, carbide face
762NXRL	65060		Ratchet stop, lock nut, carbide face, non-rotating spindle
762XFL-2	65062	0-2"/0-50mm	Friction thimble, lock nut, carbide face
762M Electronic Micrometer Heads with Standard Millimeter Graduations on Shell and Thimble			
Cat. No.	EDP	Range	Description*
762MEXFL-25	66077	0-25mm/0-1"	Friction thimble, lock nut, carbide face
762MEXFL-50	66137	0-50mm/0-2"	Friction thimble, lock nut, carbide face
Cable Information for 762 and 762M Electronic Micrometer Heads			
Part No.	EDP	Description	
733SCKB	69888	USB cable to PC (In focused window)	
733SCU	69898	USB cable to computer running SPC Data Collection Software	
733SCM	69893	Connection to Multiplexer (7612, 7613 or RMS 2704)	
PT61963	66636	Computer Interface Cable Complete to PC (RS232C)	
PT61120	65446	One 3-Volt Battery CR2450	

*1/2" (12.7mm) clamping diameter sent unless otherwise specified.

Micrometer Heads

464P Micrometer Heads

0-1/4"

460A Micrometer Heads

0-1/4"/0-6.5MM

460B Micrometer Heads

0-1/2"/0-13MM

These are plain micrometer heads with no lock nut or ratchet.

464P

464P, 460A, 460MA, 460B and 460MB Micrometer Heads			
Cat. No.	EDP	Range	Graduation
464P	56657	0-1/4"	.001"
460A	64444	0-1/4"	.001"
460MA	64445	0-6.5mm	0.01mm
460B	64446	0-1/2"	.001"
460MB	64447	0-13mm	0.01mm

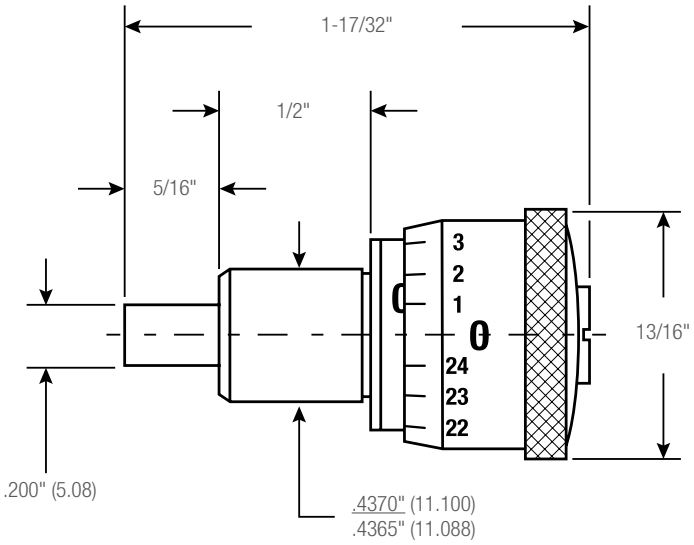

464P (0-1/4") dimensions

460A

460B

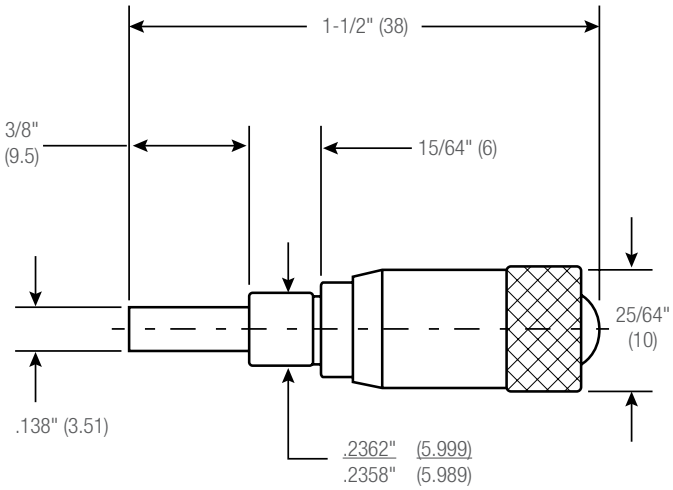

460A (0-1/4") and 460MA (0-6.5mm) dimensions

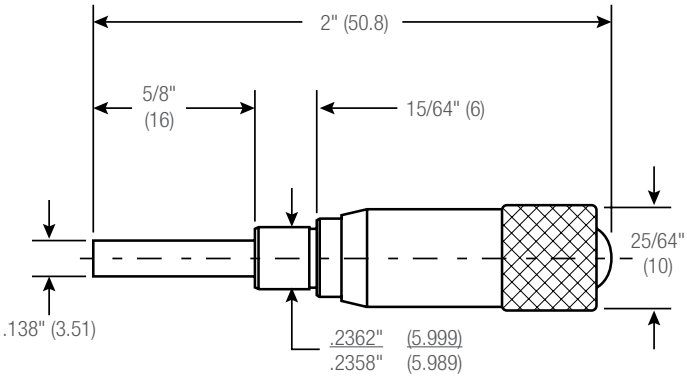

460B (0-1/2") and 460MB (0-13mm) dimensions

Micrometer Heads

463 Micrometer Heads

0-1/2"/0-13MM

1463 Stainless Steel Micrometer Heads

0-1/2"/0-13MM

The 463 and 1463 Micrometer head are exactly the same, except that the 1463 is made from rust-resistant stainless steel. The reading surfaces are satin finished stainless steel for easy readability. Heads are available with the features below:

- Either combination ratchet and speeder for uniform pressure and quicker adjustment, or plain micrometer heads that depend on your own feel
- Ring-type lock nut for quick and sure locking at any setting
- Reverse reading, if needed
- Plain or carbide spindle faces

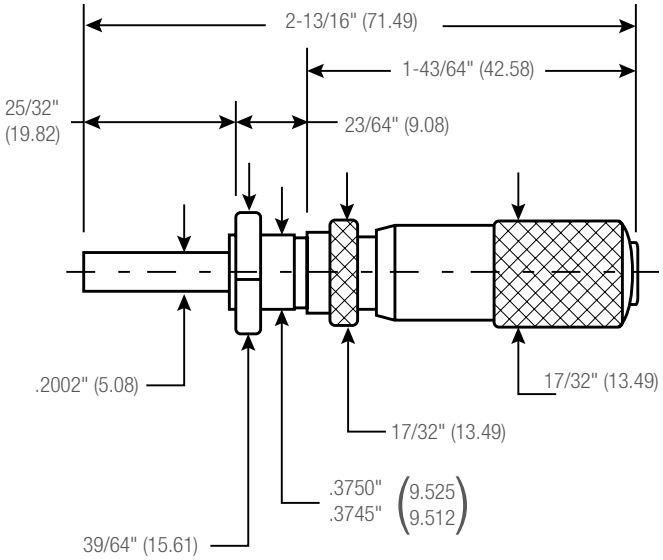

463L-38TN (0-1/2") dimensions

463 and 1463 Micrometer Heads			
Cat. No.	**EDP**	**Range**	**Graduation**
463P	52440	0-1/2"	.001"
463P-38TN	67112		
463L	52442		
463XL	52451		
463L-38TN	67113		
463RL	52443		
463XRL	64687		
RV463RL	57073		
RV463XRL	64688		
T463P	52446	0-1/2"	.0001"
T463L	52448		
T463XL	64689		
T463RL	52449		
T463XRL	65052		
463MP	52444	0-13mm	0.01mm
463MRL	52452		
463MXRL	64691		
V463MRL	65053	0-13mm	0.002mm
RV463MRL	60845		
1463RL	53207	0-1/2"	.001"
T1463RL	53209		.0001"
V1463MRL	64344	0-13mm	0.002mm

463RL

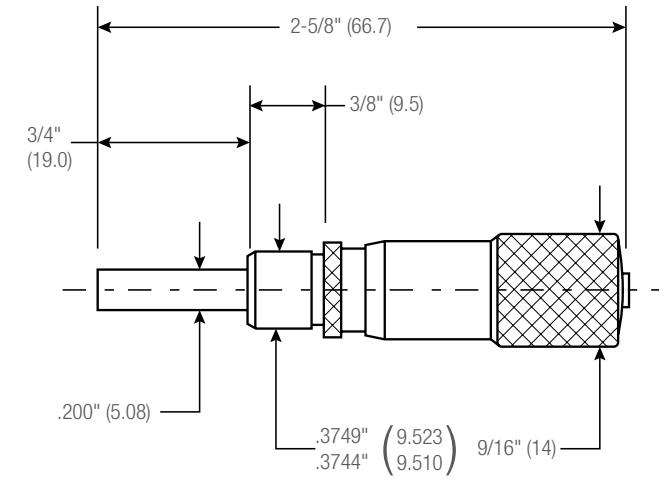

463P (0-1/2") and 463MP (0-13mm) dimensions

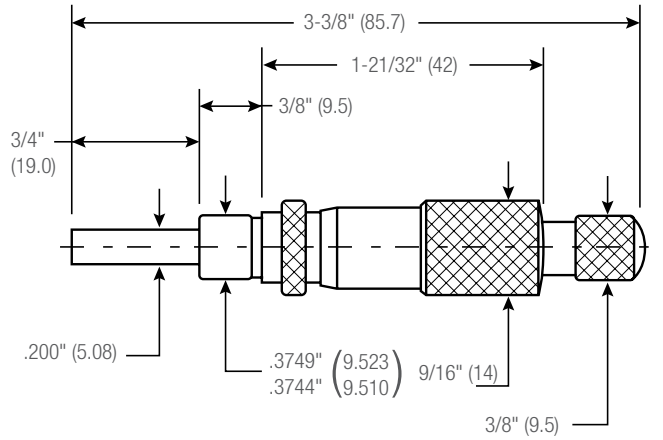

463RL (0-1/2") and 463MRL (0-13mm) dimensions

Micrometer Heads

263 and 1263 Micrometer Heads

0-1"/0-25MM

- Reading surfaces satin-finished for easy readability
- No-glare, satin chrome finish on the 263, rust-resistant, stainless steel on the 1263
- Available with reverse reading, if needed
- Ring-type knurled lock nut for quick and sure locking
- Choice of smooth friction thimble for uniform pressure, combination ratchet and speeder for uniform pressure and quicker adjustment, or a plain micrometer head that depends on your own "feel"
- Spindle face available plain or with carbide
- Furnished with 1/2" (12.7mm) or 3/8" (9.5mm) diameter clamping surface

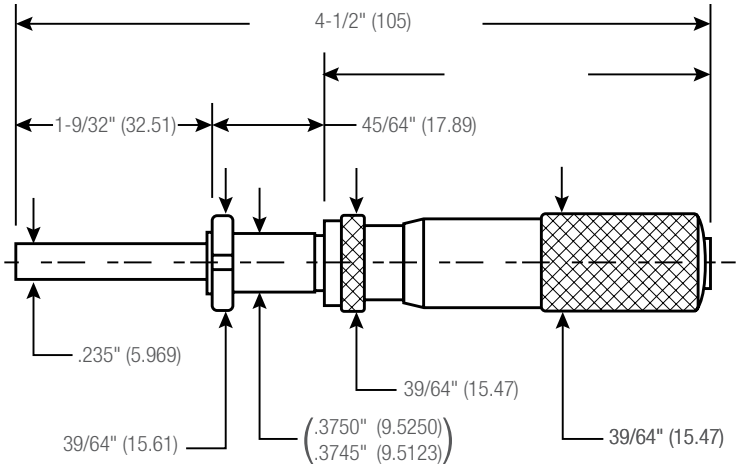

263L-38TN (0-1") dimensions

263 and 263M Micrometer Heads			
Cat. No.	**EDP**	**Range**	**Graduation**
263P	51251	0-1"	.001"
263P-38	67108		
263P-38TN	67110		
263L	51253		
263XL	51265		
263L-38	67109		
263L-38TN	67111		
263RL	51254		
263FL	51256		
RV263RL	57071		
T263P	51258	0-1"	.0001"
T263L	51260		
T263XL	65054		
T263RL	51261		
263MP*	51275	0-25mm	0.01mm
263ML*	51276		
263MRL*	51257		
263MXL*	65055		
V263MRL*	55962	0-25mm	0.001mm
RV263MRL*	64948		
V263MXRL*	65056		
1263 and 1263M Stainless Steel Micrometer Heads			
Cat. No.	**EDP**	**Range**	**Graduation**
1263L	53200	0-1"	.001"
1263RL	53201		
T1263RL	53203	0-1"	.0001"
V1263MRL*	64345	0-25mm	0.001mm

*0-25mm models specify clamping diameter 12 or 12.7mm. 12.7mm sent unless otherwise ordered.

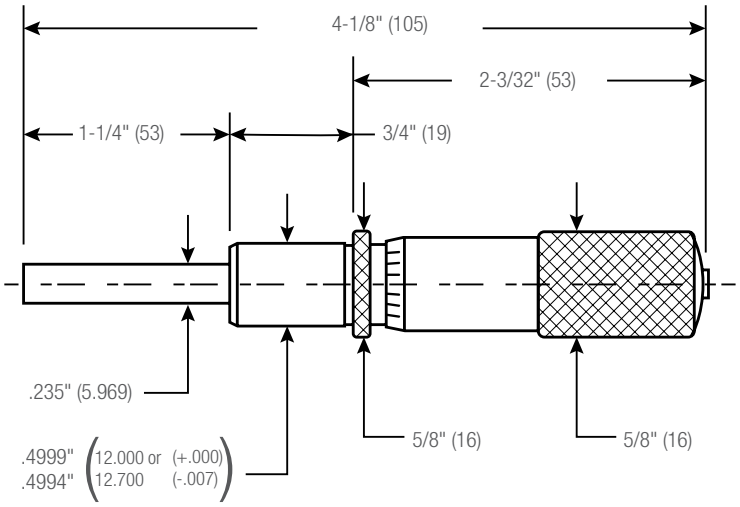

263P (0-1") and 263MP (0-25mm) dimensions

263RL

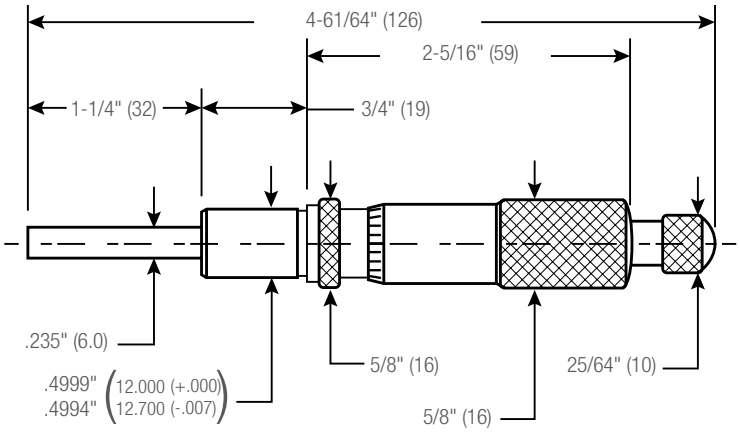

263RL (0-1") and 263MRL (0-25mm) dimensions

Micrometer Heads

363 Digital Micrometer Heads

0-1"/0-25MM

Readability Features

- Clear, easily read numbers reduce errors
- No-glare black finish on the frame
- Starrett no-glare satin chrome finish on thimble and sleeve
- .001" or 0.01mm is read directly from the counter
- Reverse reading, if needed

Ease-of-Handling Features

- Ring-type knurled lock nut for quick and sure locking
- Choice of smooth friction thimble for uniform pressure or combination ratchet and speeder for uniform pressure and quicker adjustment

Accuracy and Long-Life Features

- Extremely hard and stable one-piece spindle (the heart of our accuracy)

363 Digital Micrometer Heads (0-1" Range)		
Cat. No.	**EDP**	**Graduation**
363L	56297	.001"
363RL	56298	
363FL	56299	
RV363RL	57072	
363M Digital Micrometer Heads (0-25mm Range)		
Cat. No.	**EDP**	**Graduation**
363ML*	56302	0.01mm
363MRL*	56303	
363MFL*	56304	

*Specify clamping diameter (12 or 12.7mm). 12.7mm sent unless otherwise ordered.

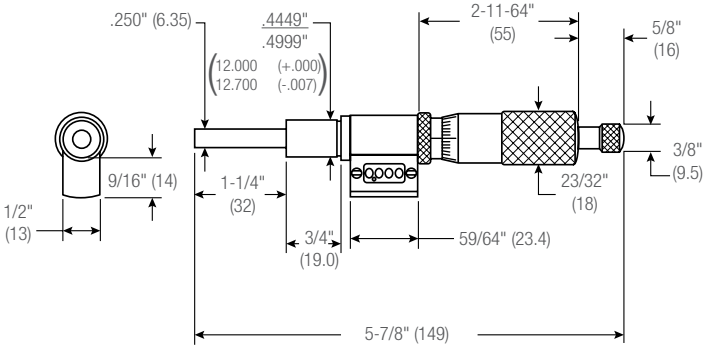

363RL (0-1") and 363MRL (0-25mm) dimensions

363RL

63 Long Range Micrometer Heads

0-2"/0-50MM

When long spindle travel is required, the 63 Micrometer heads provide a range that will handle most applications, such as in electronic equipment, machine tools, special gages, tooling, etc.

- With or without ring-type lock nut for quick and sure locking
- With or without the combination ratchet and speeder for uniform pressure and quicker adjustment

63 Micrometer Heads (0-2" Range)		
Cat. No.	**EDP**	**Graduation**
63P	50305	.001"
63L	50306	.001"
63RL	50307	.001"
T63P	50308	.0001"
T63RL	50309	.0001"
63M Micrometer Heads (0-50mm Range)		
Cat. No.	**EDP**	**Graduation**
63MRL*	55939	0.01mm
V63MRL*	64343	0.002mm

*0-25mm models specify clamping diameter 12mm or 12.7mm. 12.7mm sent unless otherwise ordered.

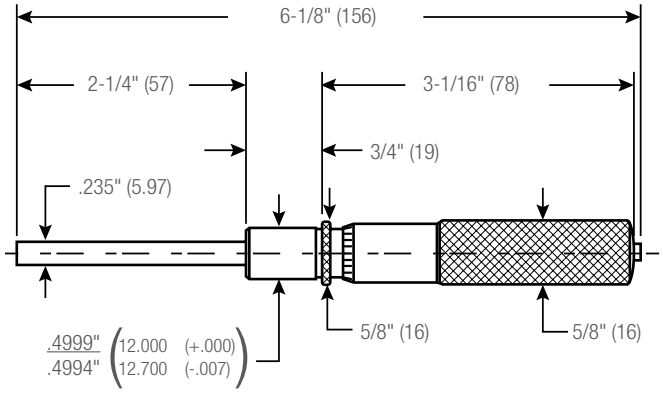

63P (0-2") and 63MP (0-50mm) dimensions

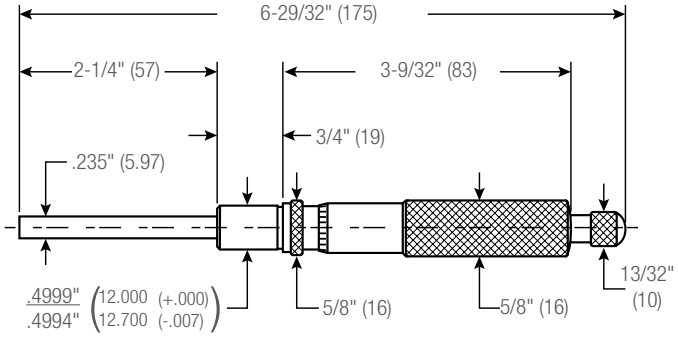

63RL (0-2") and 63MRL (0-50mm) dimensions

63L

Micrometer Heads

663 Heavy Duty Micrometer Heads

0-1"/0-25MM

The 663 is similar to the 263 but features heavy duty construction with a larger diameter spindle, clamping surface and thimble.

- Available with lock nut and the combination ratchet and speeder for uniform pressure and quicker adjustment, or a plain micrometer head with lock nut only
- Ring-type lock nut for quick and sure locking

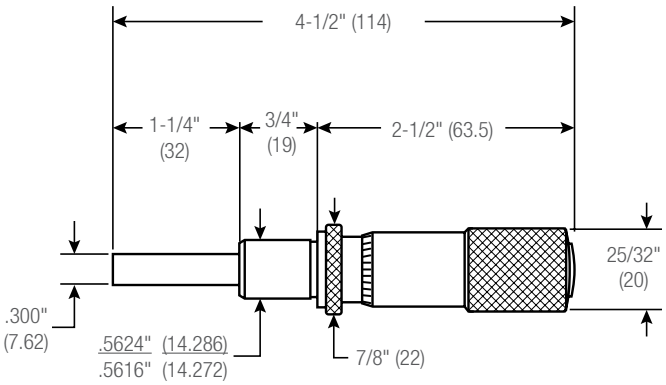

663L (0-1") and 663ML (0-25mm) dimensions

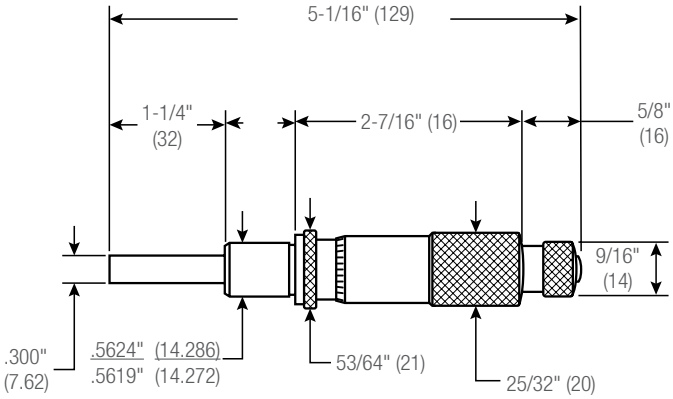

663RL (0-1") and 663MRL (0-25mm) dimensions

663 Heavy Duty Micrometer Heads (0-1" Range)		
Cat. No.	**EDP**	**Graduation**
663L 663RL	52772 52773	.001"
T663L T663RL	52777 52778	.0001"
663M Heavy Duty Micrometer Heads (0-25mm Range)		
Cat. No.	**EDP**	**Graduation**
663MRL	52774	0.01mm
V663MRL	64342	0.001mm

663RL

Micrometer Heads

465, 468 Direct-Reading, Large Micrometer Heads

0-2"/0-50MM

These large micrometer heads are designed for use with electronic equipment requiring ultra-fine adjustment for machine tools, fixtures, special gages and tools, special mountings, or wherever micrometer accuracy in setting and adjustment is required.

Another highly useful feature is the spindle adjustment, which permits adjusting the spindle length approximately ±1/16" (1.5mm). If the spindle is to be located against a definite stop and a different zero position is required, first loosen the cap screw in the end of the thimble, position the spindle to the desired location, then holding the spindle in position, rotate the thimble to zero and retighten the cap screw. In achieving this adjustable feature, we have still retained our positive taper-lock large thimble bearing.

The 468 Micrometer heads are exactly the same as the 465, except that they have double figures in red and black on the sleeve and thimble, permitting reading both ways with the spindle moving in either direction. This feature is invaluable on many instruments and microwave applications.

465 Mircometer Heads			
Cat. No.	**EDP**	**Range**	**Graduation**
T465XSP-1	67121	0-1"	.0001"
T465XSP-2	67122	0-2"	
465MXSP-25*	67123	0-25mm	0.002mm
465MXSP-50*	67124	0-50mm	
468 Micrometer Heads			
Cat. No.	**EDP**	**Range**	**Graduation**
T468XSP-1	67125	0-1"	.0001"
T468XSP-2	67126	0-2"	
468MXSP-25*	67127	0-25mm	0.002mm
468MXSP-50*	67128	0-50mm	

*Metric models specify clamping diameter 25 or 25.4mm. 25.4mm sent unless otherwise ordered.

T465XSP-1

T468XSP-1 with double figures in red and black on sleeve and thimble for reading both ways.

Readability, Accuracy and Long-Life Features

- 2-1/16" (52mm) thimble diameter with widely spaced .0001" or 0.002mm graduations for direct reading
- All graduations are direct reading – no vernier lines to match
- All reading surfaces have Starrett satin chrome finish as the no-glare background for the sharp lines and figures
- All graduations on sleeves and thimbles have advanced styling with staggered graduations for easy reading
- The spindle is carbide faced for long life
- Thimble and sleeve are made of aluminum to reduce weight
- Furnished with a speeder (not a ratchet) for quicker adjustment
- Extremely hard and stable one-piece spindle for accuracy and long-life
- Micro-lapped measuring face for flatness and squareness
- Quick and easy adjustment

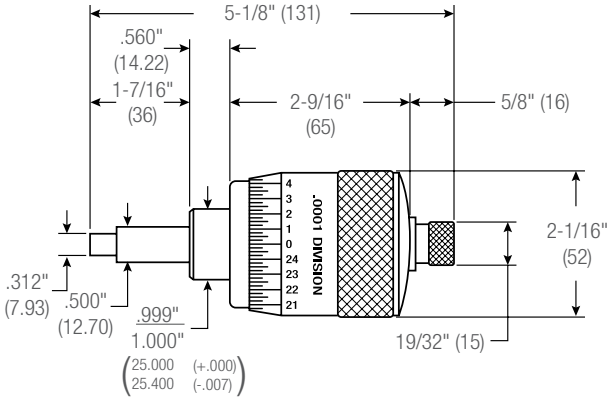

465, 468 Models (0-1"/0-25mm) dimensions

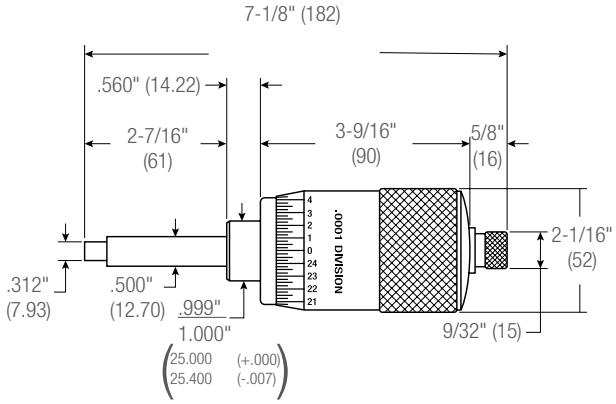

465, 468 Models (0-2"/0-50mm) dimensions

Micrometer Heads

469 Large, Super-Precision Micrometer Heads

0-1"/0-25MM

These are our most accurate micrometer heads. They are also available on special order with double graduations in red and black on the sleeve and thimble, permitting readings both ways with the spindle moving in either direction.

These micrometer heads have a 4-1/16" (103mm) thimble diameter and are graduated to .0001", .000050", 0.001mm, or 0.002mm for direct reading. They also have staggered graduations for easy counting and reading of lines. Spindle is carbide faced for long life.

469 Large, Super-Precision Micrometer Heads (0-1" Range)		
Cat. No.	**EDP**	**Graduation**
T469HXSP	67129	.000050"
T469XSP	67130	.0001"
469M Large, Super-Precision Micrometer Heads (0-25mm Range)		
Cat. No.	**EDP**	**Graduation**
469MHXSP*	67131	0.001mm
469MXSP*	67132	0.002mm

*Metric models specify clamping diameter 25 or 25.4mm. 25.4mm sent unless otherwise ordered.
Also available on special order with double graduations for reading both ways with spindle moving in either direction.

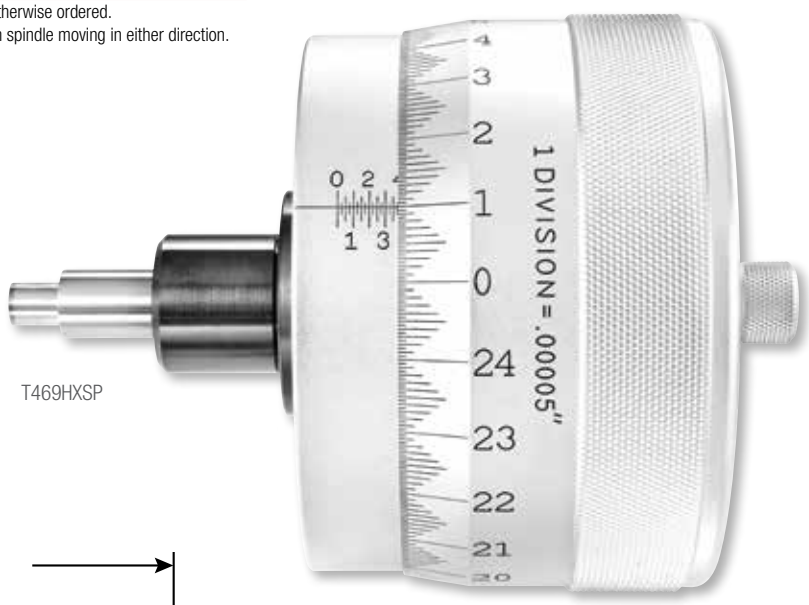

T469HXSP

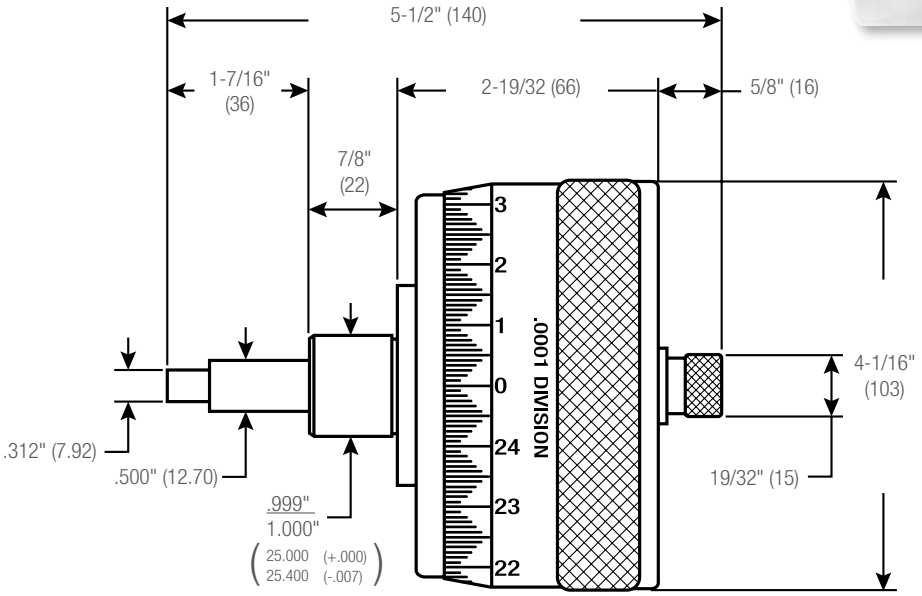

469 (0-1") and 469M (0-25mm) dimensions

Indicating Micrometers

430 Indicating Micrometer

The 430 Dial Indicating Micrometer has a Vernier scale in inch for taking precise outside diameter (OD) measurements and dial gage for Go/No-Go (GO/NG) tolerance inspection. A retractable, quick-release anvil allows for uniform consistent pressure during measurement.

430 Indicating Micrometers	
Cat. No.	**EDP**
430XLZ-1	72533
3206 Outside Micrometer Stand	
Cat. No.	**EDP**
3206	68917
Specifications	
Micrometer Range	0-1"
Indicator Range	±.0020"
Micrometer Resolution	.0001"
Indicator Resolution	.00005"
Measuring Force	5-10N (500-1000gf)
Measuring Faces	Carbide
Repeatability	±.00005"
Flatness	.000012"
Parallelism	.000036"

Features

- Retractable, quick release anvil for uniform, consistent, and fast measurement
- Insulated frame to prevent thermal expansion/contraction
- Balanced frame and thimble design for ease of use
- Carbide measuring finish on anvils
- Friction thimble
- Satin chrome finish for rust and glare resistance
- Spindle lock
- Supplied with custom wooden case

430XLZ-1

How to Use for Direct Measure and as a Comparator

For direct measuring, the micrometer head is set to zero and the dial indicator is set to zero by the bezel adjustment. Any workpiece within the 1" (25mm) range can then be measured by the micrometer head in ten-thousandths of an inch (.0001" or 0.002mm). The indicator must read zero for each measurement.

If used as a comparator, first set the head and the indicator to zero as previously explained. Then adjust the micrometer head to the desired dimension to be checked. After retracting the anvil, work is placed on the table between anvil and spindle and the anvil is then released so anvil and spindle contact the work. Plus or minus deviation from the nominal work size is then read from the dial indicator in fifty-millionths of an inch (.000050") or 0.002mm.

Bench Micrometers

777 Electronic Bench Micrometers (with output)

0-1"/0-25MM

The 777 Electronic Bench Micrometer is especially suited for precision measurements where the work must be brought to the gage.

Work is staged between the anvil and spindle on an adjustable table, which can be raised to a selected height and locked in position by turning a knurled thumb screw on back of the base. Made of cast iron with black wrinkle finish, the base is heavily proportioned to sustain gage accuracy and assure stability in use. It stands on three machined pads.

With Standard Inch Graduations on Shell and Thimble		
Cat. No.	**EDP**	**Description**
777XFLZ	67135	0-1"/0-25mm Range
With Standard Millimeter Graduations on Shell and Thimble		
Cat. No.	**EDP**	**Description**
777MEXFLZ	67136	0-25mm/0-1" Range
Cable Information		
Part No.	**EDP**	**Description**
733SCKB	69888	USB cable to PC (In focused window)
733SCU	69898	Cable to computer running SPC Data Collection Software
733SCM	69893	Connection to 7612, 7613 Multiplexer or RMS 2704
PT61963	66636	Computer Interface Cable Complete to PC (RS232C)
PT61120	65446	One 3-Volt Battery CR2450

Readability Features

- Large, right-sized, high-contrast LCD digital readout is easy to read and reduces errors
- Conventional inch or millimeter graduations standard
- Attractive no-glare black wrinkle finish on the frame

Ease-of-Handling Features

- Ring-type knurled lock nut for quick and sure locking
- Smooth friction thimble for uniform pressure

Accuracy and Long-Life Features

- Extremely hard and stable one-piece spindle
- The spindle and anvil are carbide faced for long life
- One 3-volt battery furnished for dependable power and over one year's normal usage
- Automatic OFF after 30 minutes of nonuse
- Starrett workmanship

Full-Function Action Features

- Instant inch/millimeter conversion
- "ME" millimeter model will turn on in the millimeter mode after installation of a new battery
- Measurement HOLD button
- Ability to zero tool at any position
- Ability to retain and return to the true zero reading of the micrometer
- PRESET button to install any reading at any position
- Ability to install minimum and maximum limits
- RS232 data output port
- Works well with DataSure® Wireless Data Collection Systems

777MEXFLZ

Bench Micrometers

How to Use for Direct Measure and as a Comparator

For direct measuring, the micrometer head is set to zero and the dial indicator is set to zero by the bezel adjustment. Any workpiece within the 2" (50mm) range can then be measured by the micrometer head in ten-thousandths of an inch (.0001" or 0.002mm). The indicator must read zero for each measurement.

If used as a comparator, first set the head and the indicator to zero as previously explained. Then adjust the micrometer head to the desired dimension to be checked. After retracting the anvil, work is placed on the table between anvil and spindle and the anvil is then released so anvil and spindle contact the work. Plus or minus deviation from the nominal work size is then read from the dial indicator in fifty-millionths of an inch (.000050") or 0.002mm.

673 Direct-Reading Bench Micrometers

0-2"/0-50MM

The 673 Bench Micrometer is a high precision instrument, ideal for bench use either in a shop environment or inspection laboratory. It can be used as a comparator measuring to fifty-millionths of an inch (.000050") or two-thousandths of a mm (0.002mm) or for direct measuring to .0001" or 0.002mm. Work lengths up to 2" or 50mm can be measured.

- The base is a heavy, rigid casting, incorporating at the left end a movable anvil which actuates a linear, friction-free motion transfer mechanism between the anvil and the indicator. This assures high accuracy.
- The large thimble diameter, approximately 3" (77mm), makes possible widely spaced graduations that are easy to read without a vernier scale reference
- Advanced, staggered design and quick reading graduations in combination with Starrett no-glare satin chrome finish on both thimble and sleeve also contribute to easier, faster readings
- The head is furnished with a speeder and has a special ring-type lock nut which firmly holds the spindle at any setting without distortion
- Another useful feature is the adjustable work table centered beneath the anvil and spindle. Work can be accurately aligned between the anvil and spindle by adjusting the table to the proper height and locking it in position.
- The spindle and anvil are carbide faced for long life
- To read to ten-millionths of an inch (.000010") or 0.0001mm, this bench micrometer can be used with both the 776 Electronic Digital Gage Amplifier (LVDT probe 776-2Z) or on the 717 Analog Amplifier (LVDT probe 715-2Z). Both require 673A adapter.

673 and 673M Direct-Reading Bench Micrometers

Cat. No.	EDP	Range Micrometer Head	Dial Indicator	Graduation Micrometer Head	Dial Indicator	Work Table
673XZ	67191	0-2"	.006" (0-3-0)	.0001"	.000050"	2-1/4" dia. and 7/8" vertical adjustment
673MXZ	67192	0-50mm	0.2mm (0-10-0)	0.002mm	0.002mm	57mm dia. and 22mm vertical adjustment

673 and 673M Accessories

Cat. No.	EDP	Description
673A	52891	Adapter for 715-2Z LVDT Length Probe (to connect both 717 and 776 Gage Amplifiers)
776-2Z	68818	LVDT Length Probe (776 Gage Amplifier)
715-2Z	64480	LVDT Length Probe (717 Gage Amplifier)

Anvil Pressure Adjustment – 8 oz. to 3 lb (0.23 to 1.36kg)

673M with 717 amplifier

End Measuring Rods and Standards

234 End Measuring Rods with Spherical Ends

1-24"/25-600MM

These rods or "standards" are for checking and setting micrometers of 2" capacity and larger, and are also used on machine tools for comparing gages, checking precision measuring tools, for measuring parallel surfaces, and many other types of work.

They are made of special tool steel in rod form with ends hardened and accurately lapped to a spherical radius.

Available plain or with insulated handles to minimize expansion by heat when held in the hand. 1-6" (25-150mm) sizes are 1/4" (6.3mm) diameter; 7-11" (175-275mm) sizes, 3/8" (9.5mm) diameter; 12-24" (300-600mm) sizes are 7/16" (11mm) diameter.

NOTE: These standards are the ones used for all micrometers furnished with standards. Larger sizes available on special order.

234 End Measuring Rods		
With Insulating Handle		
Cat. No.	EDP	Length
234A-1	50969	1"
234A-2	50971	2"
234A-3	50973	3"
234A-4	50975	4"
234A-5	50977	5"
234A-6	50979	6"
234A-7	50981	7"
234A-8	50983	8"
234A-9	50985	9"
234A-10	50987	10"
234A-11	50989	11"
234A-12	50991	12"
234A-13	50993	13"
234A-14	50995	14"
234A-15	50997	15"
234A-16	50999	16"
234A-17	51001	17"
234A-18	51003	18"
234A-19	51005	19"
234A-20	51007	20"
234A-21	51009	21"
234A-22	51011	22"
234A-23	51013	23"
234A-24	51015	24"

234M End Measuring Rods		
With Insulating Handle		
Cat. No.	EDP	Length
234MA-25	50970	25mm
234MA-50	50972	50mm
234MA-75	50974	75mm
234MA-100	50976	100mm
234MA-125	50978	125mm
234MA-150	50980	150mm
234MA-175	50982	175mm
234MA-200	50984	200mm
234MA-225	50986	225mm
234MA-250	50988	250mm
234MA-275	50990	275mm
234MA-300	50992	300mm
234MA-325	50994	325mm
234MA-350	50996	350mm
234MA-375	50998	375mm
234MA-400	51000	400mm
234MA-425	51002	425mm
234MA-450	51004	450mm
234MA-475	51006	475mm
234MA-500	51008	500mm
234MA-525	51010	525mm
234MA-550	51012	550mm
234MA-575	51014	575mm
234MA-600	51016	600mm

Standards for S436.1 and S436 Micrometer Sets		With SLC		
Cat. No.	EDP	Cat. No.	EDP	Description
S234C	50852			Set of two standards only
S234D	51897			Set of three standards only
S234E	50860	S234E W/SLC	66878	Set of five standards only
S234G	51929	S234G W/SLC	66877	Set of eleven standards only
S234F	51917	S234F W/SLC	66879	Set of six standards only
S234J	64146			Set of twelve standards only

Standards for S436.1M and S436M Micrometer Sets		
Cat. No.	EDP	Description
S234MC	51893	Set of two standards only
S234MD	51901	Set of three standards only
S234ME	51913	Set of five standards only
S234MF	51925	Set of six standards only
S234MG	51937	Set of eleven standards only
S234MJ	64467	Set of twelve standards only

234A-2

234A-6

End Measuring Rods

Precision End Measuring Rods and Inside Micrometers

The following pages show our varied line of precision end measuring rods and inside micrometers. The variations are fixed-range or adjustable-range micrometers and solid or tubular measuring rods.

Unless otherwise noted under the individual tools, all have these features:

- Balanced design for better feel and accurate measurement
- All contact points are hardened and ground for better accuracy and long life
- Satin chrome finish on all micrometer heads and reading surfaces that resist rust and also make for easy reading by providing a no-glare background for the sharp lines and figures
- Hardened and stabilized spindle for accuracy and long life
- Advanced sleeve design with staggered lines and distinct figures for precise and easy readability
- Quick and easy adjustment
- Starrett workmanship
- Inside Micrometers 121, 124, 823 and 824 by design have a firmer rotation than regular micrometers. This is to limit the tendency of the micrometer head to rotate when withdrawn from the workpiece.

Measuring Tips for Inside Measurements

Whether to use a two-point or three-point contact measuring tool is usually a matter of preference, but there are some differences.

A two-point contact rod-type inside micrometer shown in this section is usually lighter, easier to handle, and more versatile over long ranges from approximately 6-107" (150-2700mm). Any two-point contact micrometer, regardless of range, can probe a hole better to find the geometry of that hole than a three-point contact.

Most three-point contact tools have setting rings to ensure accuracy. If you desire very close tolerance work with two-point contact inside micrometers, it is recommended that they be set to a ring gage or to an outside micrometer.

A three-point contact micrometer shown in the Bore Gages section has an advantage in that it can be seated in position more quickly than a two-point contact tool. Usually these tools can also be read to a finer accuracy. The three-point tool will tell the maximum true diameter that can enter the hole a little faster than a two-point contact tool.

Micrometer heads used in these tools are accurate to ±.0001" or 0.002mm, but overall accuracy on tools that add rods is dependent on good practice and technique.

To ensure accuracy, these practices should be followed:

- Always make sure that there are no specks of dirt between the clamping surfaces of the rods and micrometer heads
- Tighten all rods uniformly, not too tight, not too loose, but a fairly firm assembly
- Assemble long sections vertically or, with support, horizontally
- Because temperature can affect long rods used in these tools, they should be assembled in the same environment in which they will be used

For additional information, refer to the Bore Gage Section.

Inside Micrometers

128 Combination Head with Inside Micrometer

The combination head for inside micrometers combines the precision of a dial indicator sensor and the linear accuracy of a micrometer. This combination of indicator and micrometer reduces the need for operator "feel" and provides faster readings with increased reliability.

This head is interchangeable with the 128 End Rods and extension combinations.

For direct measurements, the dial indicator hand and the telltale hand must both register zero before reading the micrometer. As a comparator, the micrometer is first set to the nominal dimension and ± deviation from zero is read from the dial indicator. The gage should be rocked to obtain a minimum reading on the indicator. Out-of-roundness can also be checked – any variation being shown by the indicator.

For inch-reading tools, the head can be adjusted within a range of 2". It extends the overall range by an additional 5". The special 81-138J Jeweled Non-Shock Indicator is graduated .0005", range ±.040" and reads 0-40 on both the plus and minus dials.

For millimeter-reading tools, the head can be adjusted within a range of 50mm. This extends the overall range an additional 125mm. The special 81-181J Jeweled Non-Shock Indicator is graduated 0.01mm, range ±1mm and reads 0-100mm on both the plus and minus dials.

All inside micrometer masters should be used vertically with the shoulder on the indicator end of the head, seated squarely.

128 Sets

128CZ

6-294"/150-7350MM

Each set consists of a satin-chrome micrometer head which can be used in combination with any one or more of a series of rigid, tubular steel measuring rods to obtain the required length.

The micrometer head is a modification of our 63, which has a 2" (50mm) range. The head has a basic length of 4" (100mm) which can be lengthened to 6" (150mm) by means of its measuring range. Besides those listed on the lead page of this section, the 128 Sets have these additional features:

- For inside measurements from 6-294" (150-7350mm) (longer sizes are also available on special order)
- Interchangeable tubular steel measuring rods and extension rods are lightweight with extreme rigidity. Rods screw into each other and seat against hardened ground and lapped surfaces necessary for high accuracy. Rod diameter 5/8" (16mm).
- Rods are provided with insulated handles to minimize expansion from hand heat. All rods marked with length
- All rod anvil contacts are hardened and ground
- All measuring rod anvil contacts are adjustable (plain extension rods are not adjustable)
- Adjustable, ground steel supporting collars (placed in "V" grooves when used in the horizontal position)

128 with rod

128

128 and 128M Combination Head with Inside Micrometer Sets

Cat. No.	EDP	Description
128	64381	Inch-reading combination head with setting master
128M	68117	Millimeter-reading combination head with setting master

128 and 128M Micrometer Head Sets

Cat. No.	EDP	Range with Micrometer Head	Movement of Screw	Grad.	Description	Range with Combination Head
128AZ	64375	6-78"	2"	.001"	With (1) 4-6" head, (1) each 2", 4", 6", 8", 10", 12" rods, (1) 12" ext., (2) 24" ext.	11-83"
128BZ	64376	6-150"	2"	.001"	With (1) 4-6" head, (1) each 2", 4", 6", 8", 10", 12" rods, (1) 12" ext., (5) 24" ext.	11-155"
128CZ	64377	6-294"	2"	.001"	With (1) 4-6" Head, (1) each 2", 4", 6", 8", 10", 12" rods, (1) 12" ext., (11) 24" ext.	11-299"
128MAZ	64378	150-1950mm	50mm	0.01mm	With (1) 100-150mm head, (1) ea. 50, 100, 150, 200, 250, 300mm rods, (1) 300mm ext., (2) 600mm ext.	300-2100mm
128MBZ	64379	150-3750mm	50mm	0.01mm	With (1) 100-150mm head, (1) ea. 50, 100, 150, 200, 250, 300mm rods, (1) 300mm ext., (5) 600mm ext.	300-3900mm
128MCZ	64380	150-7350mm	50mm	0.01mm	With (1) 100-150mm head, (1) ea. 50, 100, 150, 200, 250, 300mm rods, (1) 300mm ext., (11) 600mm ext.	300–7500mm

Micrometer Sets

124 Solid-Rod Inside Micrometer Sets

2-32"/50-800MM

These are the most popular inside micrometers because of their lightness, ease of use, and range. They are very useful for measuring inside diameters of cylinders and rings, measuring parallel surfaces, etc.

The desired range is obtained by assembling rods and spacing collars to the micrometer head. Measuring rods are provided with a shoulder that is set accurately in the micrometer head and locked in position. When assembling rods to the A and B heads, the reading line on the micrometer head should be lined up with the marking on each rod (except for the 2-3" and the 50-75mm rods).

Rod diameters are approximately 1/4" (6mm) on the A and B sizes, and approximately 11/32" (8.5mm) on the C size. Each rod has individual length adjustment for the anvil by means of special wrenches furnished.

- Measuring rods are solid and assembled on one side of the micrometer head
- Insulated rods marked with length
- Hardened and ground anvils on rods, adjustable for length. Head anvil is hardened and ground
- Quick-reading figures – every thousandth numbered on inch reading tools
- Convenient handle is available to provide reach for use in deep holes. Handle screws into the micrometer head in place of the dummy screw, which is opposite a rod lock screw. Distance from the end of the handle to the center line is 6-1/4" (158mm).

124AZ

H124 Head

124 Solid-Rod Inside Micrometer Sets (.001" Graduation)							
Without Case		With Case					
Cat. No.	EDP	Cat. No.	EDP	Range	Screw Movement	Measuring Rods	Spacing Collars
124A	50540	124AZ	50542	2-8"	1/2"	6	One 1/2"
124B	50544	124BZ	50546	2-12"	1/2"	10	One 1/2"
124C	50548	124CZ	50550	8-32"	1"	4	One 1", Two 2"
124D	50552	124DZ	50554	2-32"	1/2 and 1" (2 heads)	Set 124A and 124C	
124M Solid-Rod Inside Micrometer Sets (0.01mm Graduation)							
Without Case		With Case					
Cat. No.	EDP	Cat. No.	EDP	Range	Screw Movement	Measuring Rods	Spacing Collars
124MA	50541	124MAZ	56141	50-200mm	13mm	6	One 12mm
124MB	50545	124MBZ	56142	50-300mm	13mm	10	One 12mm
124MC	50549	124MCZ	56143	200-800mm	25mm	4	One 25mm, Two 50mm
124MD	50553	124MDZ	56144	50-800mm	13 and 25mm (2 heads)	Comprised of sets 124MA and 124MC	
Accessory for 124 and 124M Solid-Rod Inside Micrometer Sets							
Cat. No.	EDP	Description					
124H	50556	6-1/4" (158mm) handle					

Micrometer Sets

823 Tubular Inside Micrometer Sets

1-1/2-40"/40-1000MM

The 823 Micrometers are highly useful tools for internal linear measurements such as measuring cylinders, rings, setting calipers, comparing gages and measuring parallel surfaces.

The extension rods are made of steel tubing, light in weight, yet extremely rigid. Rods are approximately 3/8" (9.5mm) diameter to meet the requirements of mechanics who prefer this larger diameter. By removing the hardened and ground anvil ends (end caps) of the micrometer head, the rods may be attached to either or both ends of the micrometer as preferred. Each rod may be individually adjusted for wear by the hardened and ground anvil at the end.

- Tubular measuring rods are lightweight, yet extremely rigid. Rods are insulated, with the exception of 1/2" (13mm) and 1" (25mm) sizes.
- Each rod is marked with length
- Hardened and ground anvils on rods are adjustable for length. Head anvil is hardened and ground.
- Interchangeable anvils on both 1/2" (13mm) and 1" (25mm) heads
- Quick reading figures – every thousandth numbered on inch reading tools
- Lock nut furnished on 1" (25mm) heads
- 5-1/2" (140mm) long, convenient handle furnished on A, B, F micrometers may be clamped where it will provide correct balance and reach

823AZ 1-1/2-8" set with tool, rods, handle and wrenches

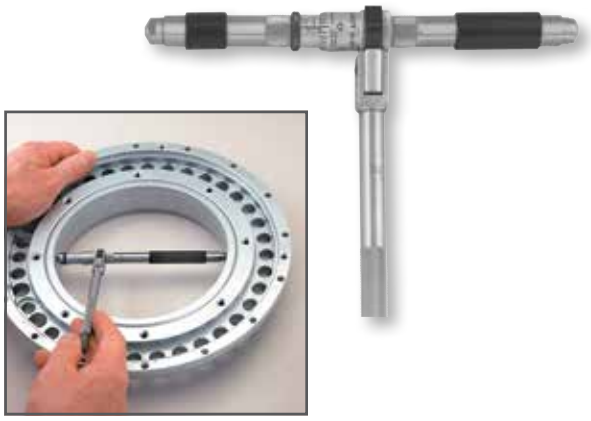

Rods attachable as shown to either one or both ends of the head ensures the best balance, feel, and ease of reading.

823EZ 4-40" set with tool, rods, handle and wrenches.

823 Tubular Inside Micrometer Sets (.001" Graduation)				
Cat. No.	**EDP**	**Range**	**Movement of Screw**	**Description**
823AZ	53050	1-1/2-8"	1/2"	With 5 rods and handle
823BZ	53052	1-1/2-12"		With 8 rods and handle
823CZ	53054	4-24"	1"	With 7 rods
823DZ	53055	4-32"		With 8 rods
823EZ	53056	4-40"		With 10 rods
823FZ	53058	1-1/2-32"	1/2 and 1" (2 heads)	With 10 rods and handle
823M Tubular Inside Micrometer Sets (0.01mm Graduation)				
Cat. No.	**EDP**	**Range**	**Movement of Screw**	**Description**
823MAZ	53051	40-200mm	13mm	With 6 rods and handle
823MBZ	53053	40-300mm		With 8 rods and handle
823MEZ	53057	100-1000mm	25mm	With 10 rods

Each set furnished in attractive, protective case with assembly instructions for various measurements.

Inside Micrometers

121 Long Range Tubular Inside Micrometer Sets

32-107"

The 121 Tubular Inside Micrometers are designed for large internal measurements beyond the capacity of most other micrometers. Each set consists of a micrometer head mounted at the end of a tubular holder in which measuring rods can be inserted and adjusted to the desired size. Final size reading in thousandths of an inch (.001") is obtained using the micrometer head.

Rods and holder are made of steel tubing, light in weight, yet very rigid. Each rod is accurately graduated with inch divisions, which are set to the size desired by a line on the holder, and firmly held by a large, knurled clamping nut. The collet has a design that insures an extremely tight grip on the rods at any setting.

Features

- Insulated rod holder to eliminate expansion by heat when hand held
- Attractive nickel-plated finish; satin-chrome finish on micrometer head reading surfaces
- Rods are accurately graduated in inches – micrometer head in thousandths of an inch
- Hardened and ground anvils. All rod anvils are adjustable.
- Quick, easy adjustment for micrometer screw

121 Long Range Tubular Inside Micrometer Sets (.001" Graduation)

Cat. No.	EDP	Range	Movement of Screw	Description
121AZ	50492	32-57"	1"	With 1 graduated measuring rod
121BZ	50493	32-82"		With 2 graduated measuring rods and 1 extension rod
121CZ	50494	32-107"		With 3 graduated measuring rods and 2 extension rods

Each set furnished in attractive, protective case.

121CZ

824 Fixed Range Inside Micrometers and Sets

2-12"/50-150MM

For those who prefer inside micrometers without interchangeable rods, Starrett offers this series of fixed range inside micrometers. The 824 and 824M can be ordered individually or in sets. All 824 and 824M Micrometers feature:

- Insulating handles on all sizes minimize possible expansion by heat when hand held
- Lock nuts (except 824AA and 824MAA)
- Adjustable contacts on thimble end
- Adjustable sleeve for head accuracy

824 Inside Micrometers (.001" Graduation)

Cat. No.	EDP	Range	Movement of Screw
824AA	56665	2-3"	1"
824A	56666	3-4"	
824B	56667	4-5"	
824C	56668	5-6"	
824D	56669	6-7"	
824E	56670	7-8"	
824F	56671	8-9"	
824G	56672	9-10"	
824H	56673	10-11"	
824J	56674	11-12"	
824K	56675	6-8"	2"
824L	56676	8-10"	
824N	56677	10-12"	

824M Inside Micrometers (0.01mm Graduation)

Cat. No.	EDP	Range	Movement of Screw
824MAA	64192	50-75mm	25mm
824MA	64193	75-100mm	
824MB	64194	100-125mm	
824MC	64195	125-150mm	

824 Fixed Range Inside Micrometer Sets

Cat. No.	EDP	Total Range	Description
S824AZ	56678	2-6"	4 micrometers, 1" range: 2-3", 3-4", 4-5", 5-6"
S824BZ	56679	2-12"	10 micrometers, 1" range: 2-3", 3-4", 4-5", 5-6", 6-7", 7-8", 8-9", 9-10", 10-11", 11-12"
S824CZ	56680	6-12"	3 micrometers, 2" eange: 6-8", 8-10", 10-12"
S824DZ	56681	2-12"	7 micrometers, (4) 1" range, (3) 2" range: 2-3", 3-4", 4-5", 5-6", 6-8", 8-10", 10-12"

824M Fixed Range Inside Micrometer Sets

Cat. No.	EDP	Total Range	Description
S824MAZ	64196	50-150mm	4 micrometers, 25mm Range: 50-75mm, 75-100mm, 100-125mm, 125-150mm

824A

824B

824C

Inside Micrometers

700 Inside Micrometer Calipers

.200-2"/5-50MM

Caliper-type jaws permit quick inside measurements accurate to ±.0002" or ±0.005mm. Jaws are hardened and ground on a radius for accurate feel without cramping.

- Satin chrome reading surface is glare free and resists rust
- Smooth friction thimble for consistent readings
- Lock screw

700 Inside Micrometer Calipers (.001" Graduation)		
Cat. No.	**EDP**	**Range**
700A	52909	.200-1.200"
700B	52911	1-2"
700M Inside Micrometer Calipers (0.01mm Graduation)		
Cat. No.	**EDP**	**Range**
700MA	56063	5-30mm
700MB	56064	25-50mm
Case for 700 and 700M Inside Micrometer Calipers		
Cat. No.	**EDP**	**Description**
940	55359	Case for 700, 700M inside micrometer calipers

701 Internal Groove Micrometers

.500-2.500"

Measures grooves for retaining rings and "O" rings, oil grooves, washer grooves, as well as bores and recesses. Depth of grooves up to 5/64" can be measured with 701A; and 7/32" with 701B. Tool is accurate to ±.0002".

- Hardened and ground gaging contacts are .030" thick
- Contacts have flush ends to gage grooves at the bottom of blind holes
- Satin chrome reading surface is glare free and resists rust
- Smooth friction thimble for consistent readings
- Lock screw

701 Internal Groove Micrometers (.001" Graduation)					
Cat. No.	**EDP**	**Range**	**Min. Bore**	**Max. Depth Bore**	**Thickness Jaws**
701A	52913	.500-1.500"	.500"	1/2"	.030"
701B	52915	1.500-2.500"	1.500"	7/8"	
Case for 701 Internal Groove Micrometers					
Cat. No.	**EDP**	**Description**			
940	55359	Protective Case			

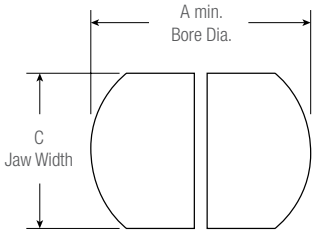

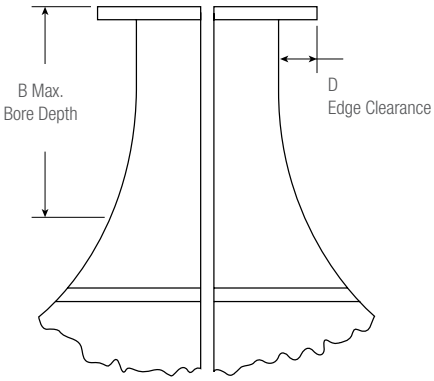

	701A	701B
Range	**.5-1.5"**	**1.5-2.5"**
A	.5"	1.5"
B	1/2"	3/4"
C	3/8"	3/8"
D	3/32"	1/4"

Depth Micrometers

749 Electronic Micrometer Depth Gage (with output)

0-12"/0-300MM

The 749 Electronic Depth Micrometer has a wide 0-12" (0-300mm) range for measuring the depth of most holes, slots, shoulders and projections.

749 Electronic Micrometer Depth Gages, Standard Inch Graduations on Shell and Thimble		
Cat. No.	**EDP**	**Description**
749BZ-6RL	65063	0-6"/0-150mm range
749BZ-12RL	68854	0-12"/0-300mm range
749M Electronic Micrometer Depth Gages, Standard Millimeter Graduations on Shell and Thimble		
Cat. No.	**EDP**	**Description**
749MEBZ-150	66124	0-150mm/0-6" range
749MEBZ-300	68855	0-300mm/0-12" range

Rods Only for 749 and 749M Electronic Micrometer Depth Gages					
Part No.	**EDP**	**mm**	**Part No.**	**EDP**	**Inch**
PT99486	72493	0-25mm	PT99143	66331	0-1"
PT99487	72494	25-50mm	PT99183	66332	1-2"
PT99488	72495	50-75mm	PT99190	66333	2-3"
PT99489	72496	75-100mm	PT99266	66334	3-4"
PT99490	72497	100-125mm	PT99267	66335	4-5"
PT99491	72498	125-150mm	PT99268	66336	5-6"
PT99457	11626	150-175mm	PT99531	11632	6-7"
PT99458	11627	175-200mm	PT99532	11633	7-8"
PT99459	11628	200-225mm	PT99533	11634	8-9"
PT99460	11629	225-250mm	PT99534	11635	9-10"
PT99461	11630	250-275mm	PT99535	11636	10-11"
PT99462	11631	275-300mm	PT99536	11637	11-12"

Cable Information for 749 and 749M Electronic Micrometer Depth Gages		
Part No.	**EDP**	**Description**
PT61963	66636	Computer interface cable complete to PC (RS232C)
733SCU	69898	USB cable to computer running SPC Data Collection Software
733SCKB	69888	USB cable to PC (In focused window)
733SCM	69893	Connection to Multiplexer (7612, 7613 or RMS2704)
PT61120	65446	One 3-Volt battery CR2450

Readability Features

- Large high-contrast LCD digital readout
- Resolution: .0001" (0.001mm)
- Inch or millimeter graduations standard
- No-glare black wrinkle finish frame
- No-glare satin chrome finish on thimble and sleeve

Ease-of-Handling Features

- Ring-type knurled lock nut
- Combination ratchet and speeder

Accuracy and Long-Life Features

- Ground and lapped one-piece spindle
- Base length 4" (100mm); rod diameter 5/32" (4mm)
- One 3-volt battery furnished with over one year's normal usage
- Automatic OFF after 30 minutes of nonuse
- Full-Function Action Features
- Instant inch/millimeter conversion
- "ME" millimeter model turns on in millimeter mode after battery installation
- Measurement HOLD button
- Ability to zero at any position and retain and return to true zero reading
- PRESET button to install any reading at any position
- Ability to install minimum and maximum limits
- RS232 data output port
- Works well with Starrett DataSure® Wireless Data Collection Systems

Depth Micrometers

Our varied line of electronic, mechanical digital and regular depth micrometers are available with base lengths from 2-1/2-6" (63.5-150mm) and can measure depths up to 9" (225mm). They are also available with rotating or non-rotating blades. All heads used in our depth micrometers are accurate to ±.0001" or ±0.002mm.

Unless otherwise noted under the individual tools, they all have these features:

- A base shape design that will automatically position the fingers so that the base is easily held in place for measuring stability
- All precision screws are ground and lapped
- All bases and rods are hardened, ground, and lapped for permanent accuracy
- All reading surfaces have a satin chrome finish that resists rust and provides a no-glare background for the sharp lines and figures
- All measuring rods are adjustable
- Quick and easy adjustment

749MEBZ-150

Depth Micrometers

446 Digital Micrometer Depth Gages

0-6"/0-150MM

446 Mechanical Digital Depth Micrometers are simple to use even by the inexperienced. Besides those listed on the lead page of this section, this tool has these additional features:

- Clear, easily read white numbers on black background reduce errors
- No-glare black finish on the frame
- .001" or 0.01mm is read directly from the counter
- Ring-type knurled lock nut for quick and sure locking
- Combination ratchet and speeder for uniform pressure and quicker adjustment
- Hardened, ground, and lapped base is 3" (75mm) long
- Measuring rods are 5/32" (4mm) diameter and are adjustable

446 Digital Micrometer Depth Gages (.001" Graduation)			
Cat. No.	EDP	Range	Rods
446AZ-3RL	56288	0-3"	3
446AZ-6RL	56289	0-6"	6
446M Digital Micrometer Depth Gages (0.01mm Graduation)			
Cat. No.	EDP	Range	Rods
446MAZ-75RL	56294	0-75mm	3
446MAZ-150RL	56295	0-150mm	6

Rods Only for 446 & 446M Digital Micrometer Depth Gages					
For 446 (in)			For 446M (mm)		
Part No.	EDP	Size	Part No.	EDP	Size
PT99381	72211	0-1"	PT99391	72217	0-25mm
PT99382	72212	1-2"	PT99392	72218	25-50mm
PT99383	72213	2-3"	PT99393	72219	50-75mm
PT99384	72214	3-4"	PT99394	72220	75-100mm
PT99385	72215	4-5"	PT99395	72221	100-125mm
PT99386	72216	5-6"	PT99396	72222	125-150mm

446AZ-6RL

Depth Micrometers

449 Micrometer Depth Gages with Non-Rotating Blades

0-6"/0-150MM

By holding the base in one hand, the .045" thick x 1/8" wide (1.2 x 3.2mm) blade can be turned with the fingers and positioned at any angle relative to the base. In operation, blade does not turn, but moves perpendicularly only, permitting depth measurement of narrow shoulders without the blade rolling off. This is also ideal for slots and recesses as narrow as .045" (1.2mm). Furnished with a 2-1/2" (63mm) or a 4" (100mm) base.

Also available with 3 rods for measuring 0-3" (0-75mm), or 6 rods for measuring 0-6" (0-150mm) in thousandths of an inch or 0.01mm.

This tool comes with the combination ratchet and speeder for uniform pressure and quicker adjustment.

449 Micrometer Depth Gages (.001" Graduation)					
Cat. No.	EDP	Range	Base Length	Rods	Rod Size
449AZ-3R	52318	0-3"	2-1/2"	3	.045 x 1/8"
449AZ-6R	52320	0-6"	2-1/2"	6	
449BZ-3R	52322	0-3"	4"	3	
449BZ-6R	52324	0-6"	4"	6	
449M Micrometer Depth Gages (0.01mm Graduation)					
Cat. No.	EDP	Range	Base Length	Rods	Rod Size
449MAZ-75R	56636	0-75mm	63.5mm	3	1.2 x 3.2mm
449MAZ-150R	56637	0-150mm	63.5mm	6	
449MBZ-75R	56638	0-75mm	100mm	3	
449MBZ-150R	56639	0-150mm	100mm	6	
Rods Only for 449M Micrometer Depth Gages					
For 449 (in)			For 449M (mm)		
Part No.	EDP	Size	Part No.	EDP	Size
PT99306	72476	0-1"	PT99115	71838	0-25mm
PT99307	72477	1-2"	PT99116	71839	25-50mm
PT99308	72478	2-3"	PT99117	71840	50-75mm
PT99309	72479	3-4"	PT99118	71841	75-100mm
PT99310	72480	4-5"	PT99119	71842	100-125mm
PT99311	72481	5-6"	PT99120	71843	125-150mm

Longer rods are available by special order.

449AZ-3R

Depth Micrometers

440, 445 Depth Micrometers

0-9" AND 0-12"/0-225MM

- The depths of holes, slots, shoulders and projections can be measured to .001" or 0.01mm with these fine tools
- 440 Gages furnished with a 2-1/2" (63.5mm) base and 1/8" (3.2mm) diameter measuring rods
- 445 Gages furnished with choices of 3" (75mm), 4" (100mm), and 6" (150mm) bases and have 5/32" (4mm) diameter measuring rods
- Combination ratchet and speeder for uniform pressure and quicker adjustment
- Ring-type lock nut for quick and sure locking

440-3L

445AZ-6RL

445AZRL

440, 445 Depth Micrometers					
Cat. No.	EDP	Range	Base	Rods	Rod Dia.
440Z-3L	52113	0-3"	2-1/2"	3	1/8"
440Z-6L	52117	0-6"		6	
440Z-9L	52121	0-9"		9	
440Z-3RL	52115	0-3"	2-1/2"	3	1/8"
440Z-6RL	52119	0-6"		6	
440Z-9RL	52123	0-9"		9	
445AZ-3RL	52208	0-3"	3"	3	5/32"
445AZ-6RL	52212	0-6"		6	
445AZ-9RL	52216	0-9"		9	
445AZ-12RL	67117	0-12"		12	
445BZ-3RL	52220	0-3"	4"	3	5/32"
445BZ-6RL	52224	0-6"		6	
445BZ-9RL	52228	0-9"		9	
445BZ-12RL	67118	0-12"		12	
445DZ-3RL	52244	0-3"	6"	3	5/32"
445DZ-6RL	52248	0-6"		6	
445DZ-9RL	52252	0-9"		9	
445DZ-12RL	67119	0-12"		12	
440M, 445M Depth Micrometers					
Cat. No.	EDP	Range	Base	Rods	Rod Dia.
440MZ-75RL	52116	0-75mm	63.5mm	3	3.2mm
440MZ-150RL	52120	0-150mm		6	
440MZ-225RL	52124	0-225mm		9	
445MAZ-75RL	52209	0-75mm	75mm	3	4mm
445MAZ-150RL	52213	0-150mm		6	
445MAZ-225RL	52217	0-225mm		9	
445MBZ-75RL	52221	0-75mm	100mm	3	4mm
445MBZ-150RL	52225	0-150mm		6	
445MBZ-225RL	52229	0-225mm		9	
445MDZ-75RL	52245	0-75mm	150mm	3	4mm
445MDZ-150RL	52249	0-150mm		6	
445MDZ-225RL	52253	0-225mm		9	

Inch Reading Rods Only				
Fits 440 Models		Fits 445 Models		Size
Part No.	EDP	Part No.	EDP	
PT99331	71973	PT99341	71982	0-1"
PT99332	71974	PT99342	71983	1-2"
PT99333	71975	PT99343	71984	2-3"
PT99334	71976	PT99344	71985	3-4"
PT99335	71977	PT99345	71986	4-5"
PT99336	71978	PT99346	71987	5-6"
PT99337	71979	PT99347	71988	6-7"
PT99338	71980	PT99348	71989	7-8"
PT99339	71981	PT99349	71990	8-9"
		PT99358	66673	9-10"
		PT99359	66674	10-11"
		PT99360	66675	11-12"
Millimeter Reading Rods Only				
Fits 440M Models		Fits 445M Models		
Part No.	EDP	Part No.	EDP	Size
PT99361	72193	PT99371	72202	0-25mm
PT99362	72194	PT99372	72203	25-50mm
PT99363	72195	PT99373	72204	50-75mm
PT99364	72196	PT99374	72205	75-100mm
PT99365	72197	PT99375	72206	100-125mm
PT99366	72198	PT99376	72207	125-150mm
PT99367	72199	PT99377	72208	150-175mm
PT99368	72200	PT99378	72209	175-200mm
PT99369	72201	PT99379	72210	200-225mm

Longer rods available by special order.

Depth Micrometers

443 Micrometer Depth Gages with Half Base

0-9"

- Exactly like the 445 Micrometer except that it has a half base
- 2" (50mm) half base permits measuring depths of holes and slots close to shoulders and between obstructions
- Rods have individual length adjustment and are 5/32" (4mm) in diameter

443 Micrometer Depth Gages				
Cat. No.	EDP	Range	No. of Rods	Graduation
443Z-3RL	52171	0-3"	3	
443Z-6RL	52173	0-6"	6	.001"
443Z-9RL	52175	0-9"	9	

Inch Reading Rods Only		
443 Models		
Part No.	EDP	Size
PT99341	71982	0-1"
PT99342	71983	1-2"
PT99343	71984	2-3"
PT99344	71985	3-4"
PT99345	71986	4-5"
PT99346	71987	5-6"
PT99347	71988	6-7"
PT99348	71989	7-8"
PT99349	71990	8-9"
PT99358	66673	9-10"
PT99359	66674	10-11"
PT99360	66675	11-12"

443ZRL

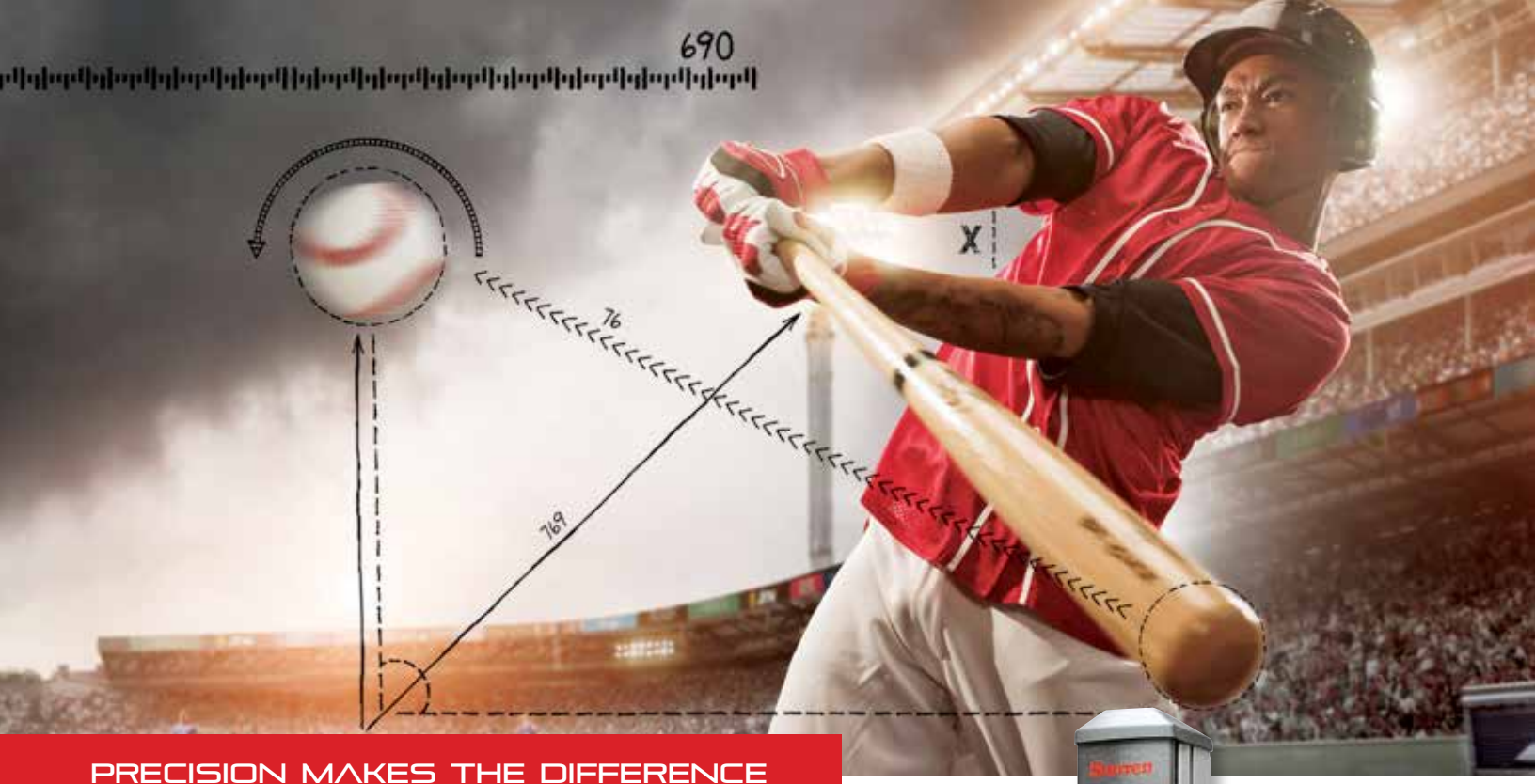

PRECISION MAKES THE DIFFERENCE

EXCEED YOUR CAPABILITIES.

The Starrett FMS incorporates new performance-based capabilities and user-friendly features to help you perform critical force tests with greater accuracy and efficiency.

It can perform all of your basic force measurement tests, as well as more complex multi-stage tests to international standards.

Model FMS5000

Starrett®

(978) 249-3551 • starrett.com

Follow us!

SLIDE CALIPERS

Electronic Calipers

798 Electronic Calipers

0-12"/0-300MM

The 798 Electronic Caliper features a large, easy-to-read, high contrast LCD readout. It includes IP67 protection against coolants, water, chips, dust and dirt often found in machine shop environments. Its induction type linear encoder system and Inch/millimeter conversion makes Starrett precision measuring tools the right choice for any job.

798 Electronic Calipers			
Cat. No.	**EDP**	**Range**	**Description**
798B-6/150	12521	0-6" (150mm)	Caliper with output
798B-6/150 W/SLC	12522		Caliper with output
798BX-6/150	12782		Caliper with output
798A-6/150	20798		Caliper without output
798B-8/200	12523	0-8" (200mm)	Caliper with output
798B-8/200 W/SLC	12524		Caliper with output
798A-8/200	20799		Caliper without output
798B-12/300	12525	0-12" (300mm)	Caliper with output
798B-12/300 W/SLC	12526		Caliper with output
798A-12/300	20800		Caliper without output

Accessories, Cables and Case Information for 798 Electronic Calipers		
Cat. No.	**EDP**	**Description**
798SCM	69894	SmartCable to multiplexer
798SCU	73321	SmartCable to USB
798SCKB	69889	USB cable to PC (In focused window)
PT26151	64440	Center distance attachment
PT22431	64640	Depth attachment
PT63388	72517	Computer interface cable to PC (USB) with driver CD
PT63329-1	12733	Replacement non-contact computer interface cable to PC (USB)
PT99492	65650	Two 3-Volt batteries, CR2032
723ZZ-6/722ZZ-6	57070	Deluxe padded case for 0-6" (150mm) calipers
950	63878	Finished wood case for 0-8" (200mm) calipers
946	56695	Finished wood case for 0-12" (300mm) calipers

*Includes redemption card for Standard Letter of Certification (SLC).

Features

- IP67 level of protection
- Fine adjustment
- Hardened stainless steel measuring surfaces
- Large, easy-to-read, high-contrast LCD digital readout
- Induction type linear encoder system
- RS232 output
- Heavy-duty bar and slide
- Slide lock
- One 3-volt battery for over one year of normal usage
- In/mm conversion
- Zero at any position
- Auto-Off after 30 minutes
- Reactivation of display with no loss of position
- Works well with Starrett DataSure® Wireless Data Collection Systems

Approximate Jaw Depths for 798 Electronic Calipers			
	6" (150mm)	**8" (200mm)**	**12" (300mm)**
Outside	1-1/2" (38mm)	1-7/8" (47.6mm)	2-1/2" (63.5mm)
Inside	5/8" (16mm)	3/4" (19mm)	3/4" (19mm)

IP Protection

An IP number is composed of two numbers, the first referring to protection against solid objects and the second against liquids.

First number 6: Totally protected against dust

Second number 7: Protection against submersion in water under standardized conditions of pressure for 30 minutes

798B-6/150

798B-8/200

798B-12/300

Electronic Calipers

NEW!

EC799 Electronic Calipers

0-40"/0-1000MM

The EC799 Electronic Caliper is light, comfortable, easy-to-use, and constructed with features that have made Starrett slide calipers the machinist's first choice for many years. Output now available.

The EC799 offers a slim, streamlined profile, a large, clear, easy-to-read LCD display, long battery life, and function buttons for zero and inch/mm.

Features

- Lightweight, ergonomic design
- Inch/millimeter conversion reads .0005" or 0.01mm
- Easy access to the single, long-life battery
- Last measuring position retained when shut off
- Hardened stainless steel body for long life
- Fine adjustment thumb wheel
- Lock screw to hold the slide in position
- Resolution is .0005" (0.01mm)
- Zero at any position
- Protective case

6", 8" and 12" Calipers Only

- Large easy-to-read LCD, .32" high characters
- Automatic shut-off after 5 minutes of non-use
- Linear accuracy meets DIN862
- Integrated depth rod

Extended Range 24" and 40" Calipers

- Preset and hold feature
- Minimum and maximum limits set
- I.D. jaw dimension is 0.800"/20.32mm
- LCD characters are .50" high
- Auto shut-off after 30 minutes of non-use

EC799 Electronic Slide Calipers

Cat. No.	EDP	Range in	Range mm
EC799A-6/150	00142	0-6	0-150
EC799A-6/150 W/SLC*	72665		
EC799B-6/150	00143		
EC799B-6/150 W/SLC*	00144		
EC799A-8/200	00145	0-8	0-200
EC799A-8/200 W/SLC*	72674		
EC799B-8/200	00146		
EC799B-8/200 W/SLC*	00147		
EC799A-12/300	00148	0-12	0-300
EC799A-12/300 W/SLC*	72673		
EC799B-12/300	00149		
EC799B-12/300 W/SLC*	00150		

799 Extended Slide Calipers

Cat. No.	EDP	Range in	Range mm
799AZ-24/600	11978	0-24	0-600
799AZ-40/1000	11979	0-40	0-1000

Accessories, Cables and Case Information for 799 Electronic Calipers

Cat. No.	EDP	Description
EC799BSCM	46000	SmartCable to multiplexer
EC799BSCU	46002	SmartCable to USB
EC799BSCKB	46001	SmartCable to USB keyboard
PT26151	64440	Center distance attachment
PT22431	64640	Depth attachment for 6", 9" and 150mm calipers
PT99492	65650	3-volt battery; CR2032
723ZZ-6/722ZZ-6	57070	Deluxe padded case for 0-6" (150mm) calipers
950	63878	Finished wood case for 0-8" (200mm) calipers
946	56695	Finished wood case for 0-12" (300mm) calipers

* Includes redemption card for Standard Letter of Certification (SLC).

Approximate Jaw Depths for 799 Electronic Calipers

	6" (150mm)	8" (200mm)	12" (300mm)	24" (600mm)	40" (1000mm)
Outside	1-1/2" (38mm)	2" (50.8mm)	2-1/2" (63.5mm)	4" (100mm)	6" (150mm)
Inside	5/8" (16mm)	3/4" (19mm)	23/32" (18.3mm)	11/16" (17.46mm)	11/16" (17.46mm)

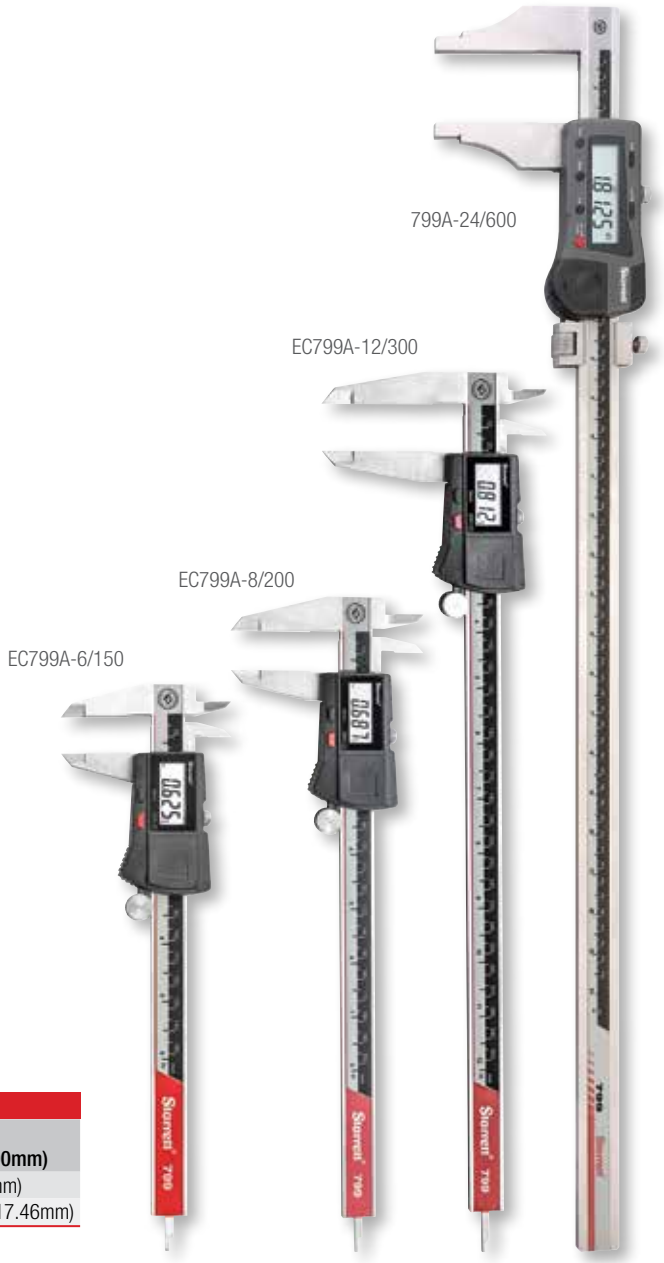

Carbon Calipers

5000, 5001 and 5002 Carbon Fiber Calipers

0-40"

- Carbon fiber construction significantly reduces weight, improving maneuverability
- Titanium coated stainless steel outside measurement jaws for long life and superior flatness
- Coolant resistant
- Two preset modes, REF I and REF II, allow setting one mode to a setting master and a second to a zero setting
- Full-featured, sophisticated electronics with RS232 output
- Ideal for use with Starrett DataSure® Wireless Data Collection Systems using a 1500-3A-1N end node
- Will also transmit to PC through cable

Features and Specifications

- CR2032 lithium battery included
- Clamping screw
- Protective wooden case
- Resolution: 0.0005"/0.01mm

5000 and 5002 Only

- mm/inch mode button
- On/Off button
- Hold feature will freeze the display when in REF I or REF II mode

5001 Only

- Mode and Set buttons
- Min/Max mode displays values referenced from the preset value of the REF mode the tool is in when entering MIN/MAX
- Tolerance mode to set upper and lower measurement tolerances
- Larger display with more information

5002BZ-16/400 with PT06138 Step Contacts

5002BZ-24/600 with PT06139 Conical Contacts

5002BZ-40/1000 with PT06137 Disc Contacts

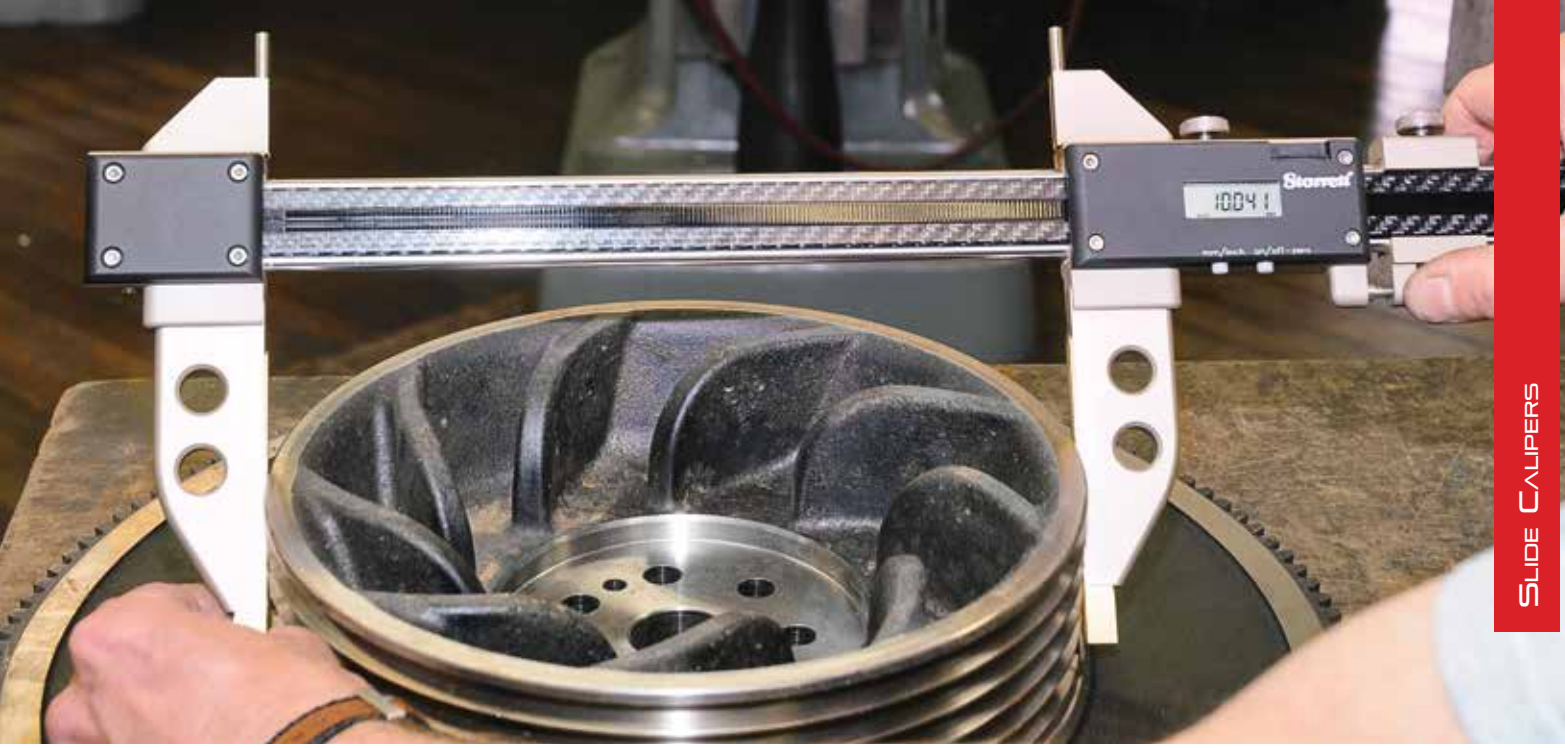

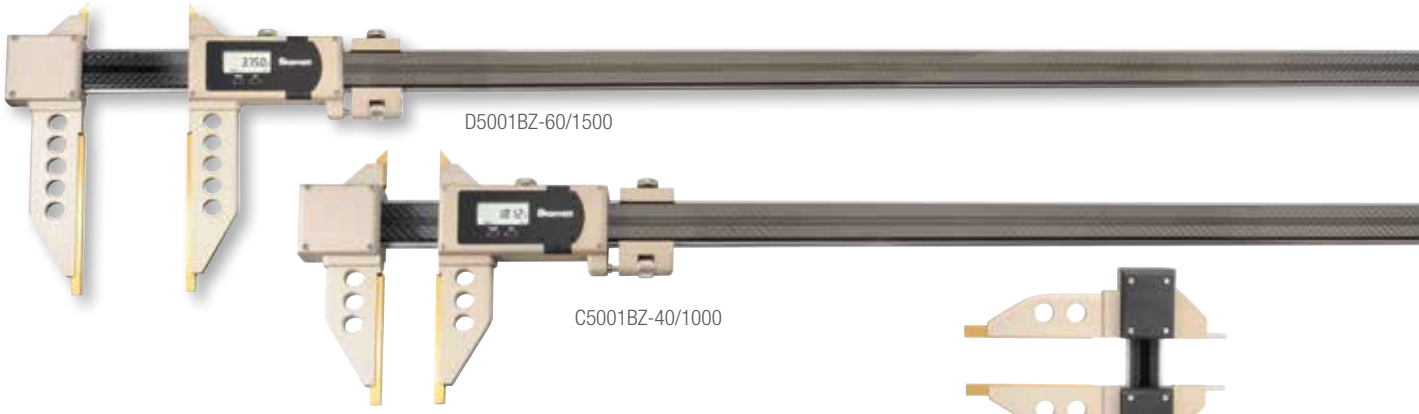

D5001BZ-60/1500

C5001BZ-40/1000

B5000BZ-24/600

B5000BZ-20/500

5000 Carbon Fiber Calipers						
					Measuring Capacities	
Cat. No.	EDP	Outside	Weight	Jaw Depth	Inside (w/jaws)	Inside (w/top pins)
B5000BZ-20/500	14571	0-20" (0-500mm)	2.43lb (1.10kg)	4.921" (125mm)	0.787-20" (20-500mm)	0.394-20" (10-500mm)
B5000BZ-24/600	14572	0-24" (0-600mm)	2.56lb (1.16kg)	4.921" (125mm)	0.787-24" (20-600mm)	0.394-24" (10-600mm)
B5000BZ-40/1000	14573	0-40" (0-1000mm)	3.09lb (1.40kg)	4.921" (125mm)	0.787-40" (20-1000mm)	0.394-40" (10-1000mm)

5001 Carbon Fiber Calipers				
Cat. No.	EDP	Outside	Weight	Jaw Depth
C5001BZ-40/1000	14574	0-40" (0-1000mm)	5.51lb (2.50kg)	5.906" (150mm)
D5001BZ-60/1500	14575	0-60" (0-1500mm)	7.28lb (3.30kg)	7.875" (200mm)

5002 Carbon Fiber Calipers			
Cat. No.	EDP	Outside	Weight
5002BZ-16/400	14576	0-16" (0-400mm)	1.65lb (0.75kg)
5002BZ-24/600	14577	0-24" (0-600mm)	1.98lb (0.90kg)
5002BZ-40/1000	14578	0-40" (0-1000mm)	3.31lb (1.50kg)

Accessories for 5002 Carbon Fiber Calipers		
Part No.	EDP	Description
PT06137	12829	Disc Contacts
PT06138	12830	Step Contacts
PT06139	12831	Cone Contacts

Data Collection		
Part No.	EDP	Description
797SCKB	69890	USB cable to PC (In focused window)

Elecronic Calipers

5005 Electronic Long Jaw Calipers

0-24"/0-600MM

The 5005 Electronic Calipers are built with extra long, 12" (300mm) jaws ideal for applications requiring precise O.D. or I.D. measurement in tight spaces that standard calipers can not reach.

Features and Specifications

- Hardened stainless steel construction for long life
- Tight, smoothly fitted slides for maximum accuracy and easy adjustment
- Coolant resistant
- Lock nut to hold measurements
- Fine adjustment thumbwheel
- Inch/mm conversion
- Ability to set ZERO at any position
- Two preset modes to install any reading at any point
- Full-featured, sophisticated electronics with Opto RS232 output
- Ideal for use with Starrett DataSure® Wireless Data Collection Systems using a 1500-3A-1N end node
- Will also transmit to PC through cable
- CR2032 lithium battery included
- Large easy-to-read display with resolution of 0.0005"/0.01mm
- Packed in a wood case
- Computers with Excel use 797SCKB
- Computers running SPC Data Collection use 797SCU

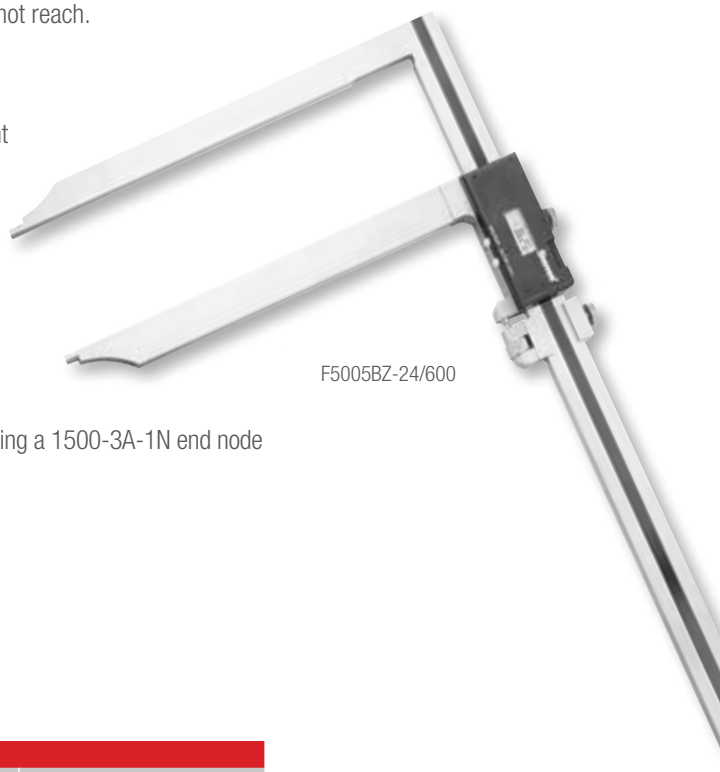

F5005BZ-24/600

5005 Electronic Calipers			
Cat. No.	EDP	Range	Jaw Depth
F5005BZ-24/600	14588	0-24" (0-600mm)	12" (300mm)

Elecronic Calipers

5006 Electronic Groove Calipers

Features and Specifications

- Standard Measuring Tip Diameter: .118" (3mm)
- Two Preset Modes
- Hold Feature will freeze the display when it is in preset mode
- On/Off Button
- RS232 port allows data transmission thru a DataSure® Wireless Data Collection System using a 1500-3A-1N End Node. Will also transmit through a connected cable
- CR2032 lithium battery included
- Includes wooden case
- Resolution: 0.0005" (0.01mm)
- Generous diameter and jaw depth capacities
- Ideal for measuring internal and external grooves on large workpieces
- Hardened stainless steel construction
- Coolant resistant

5006BZ-14/350

5006 Electronic Groove Caliper	
Cat. No.	**EDP**
5006BZ-14/350	14589

Data Collection		
Part No.	**EDP**	**Description**
797SCKB	69890	USB cable to PC (In focused window)

Specifications		
	Groove Measuring Range	**Max. Depth**
Outside	0-12.5" (0-318mm)	3.937" (100mm)
Inside	1.654-15" (42-381mm)	3.7" (94mm)

Dial Calipers

120, 120M Dial Calipers

0-12"/0-300MM

The Only American Made Dial Caliper …

This is one of the handiest measuring tools available, used by mechanics and toolmakers everywhere. It is direct reading, reliable and accurate.

Readability Features

- Sharp, clear dial graduations of .001" or 0.02mm – .100" or 2mm in one revolution
- Sharp, black graduations on the satin finished bar, every .100" or 1mm
- Choice of black, red, or white inch dials; millimeter dials are yellow

Ease-of-Handling Features

- Knife-edge contacts for both inside and outside measurements
- One hand use with the thumb-operated, fine adjustment roll
- Lock screw for dial bezel and for holding the sliding jaw in position
- Detachable depth rod available for 12" (300mm) model
- Parallel lines can be scribed on a workpiece by setting the caliper jaw to the required dimensions, locking the movable jaw with the lock screw and then using the front edge of the fixed jaw as the scribing surface

Accuracy and Long-Life Features

- Long-wearing carbide faces on outside contacts on model 120AX-6 and 120MX-150 only
- Hardened stainless steel bar, measuring surfaces, rack, gears and depth rod
- Positive, split-gear anti-backlash control
- Rack teeth point down to make it easy to shed foreign matter and thereby keep the area clean

120A-6

R120A-6

B120A-6

120AM-150 metric dial caliper wtih yellow dial

120Z-12

120 Dial Calipers (.001" Graduation)						
				Jaw Depth		
Cat. No.	EDP	Range	Dial Color	in	mm	Description
120A-6	64514	0-6"	White	5/8	16	Caliper in fitted plastic case
120A-6 W/SLC†	66568					Caliper in fitted plastic case
120X-6	65909	0-6"	White	1-1/2	38	Caliper in fitted plastic case
B120A-6	64515	0-6"	Black	5/8	16	Caliper in fitted plastic case
B120A-6 W/SLC†	66917	0-6"	Black	1-1/2	38	Caliper in fitted plastic case
R120A-6	64516	0-6"	Red	5/8	16	Caliper in fitted plastic case
R120A-6 W/SLC†	66918	0-6"	Red	3/4	19	Caliper in fitted plastic case
120AZ-9	64520	0-9"	White	5/8	16	Caliper in finished Wood case
120A-9	64517	0-9"	White	1-1/2	38	Caliper without case
120Z-12	56693	0-12"	White	3/4	19	Caliper in finished wood case
120Z-12 W/SLC†	66569					Caliper in finished wood case
120-12	56694	0-12"	White	2-1/2	63	Caliper without case
120-12 W/SLC†	66919					Caliper without case

120M Dial Calipers (0.02mm Graduation)						
				Jaw Depth		
Cat. No.	EDP	Range	Dial Color	in	mm	Description
120AM-150	66295	0-150mm	Yellow		16	Caliper in fitted plastic case
120AM-150 W/SLC†	66920	0-150mm	Yellow		38	Caliper, without case
120MX-150	65910					Caliper in fitted plastic case
120MZ-225	64508	0-225mm	Yellow		16	Caliper in wood case
120M-225	64509	0-225mm	Yellow		38	Caliper without case
120MZ-300	64510	0-300mm	Yellow		19	Caliper in wood case
120MZ-300 W/SLC†	66922					Caliper in wood case
120M-300	64511	0-300mm	Yellow		63	Caliper without case
120M-300 W/SLC†	66921					Caliper without case

Accessories and Cases Only for 120 and 120M Dial Calipers		
Cat. No.	EDP	Description
PT26151	64440	Center distance attachment*
PT22431	64640	Depth attachment for 6", 9" and 150mm calipers
PT26091	65100	Detachable depth rod for 12" calipers
943	55971	Deluxe padded case for 6" (150mm) calipers
950	63878	Finished wood case for 9" (225mm) calipers
946	56695	Finished wood case for 12" (300mm) calipers
915	64166	Leather holster for 6" (150mm) calipers

† Includes redemption card for Standard Letter of Certification (SLC).
* See details in this section.

Dial Calipers

3202 Dial Calipers

0-12"

With the ability to provide quick, accurate measurement of O.D., I.D., depth and step the dial caliper is the most versatile precision hand tool on the market.

3202 Dial Calipers are based on the caliper that has been the first choice of metal working professionals for decades. 3202 Dial Calipers are available in 6", 8" and 12" versions.

Features and Specifications

- Sharp, clear dial graduations of 0.001"
- 1" per revolution
- Thumb-operated fine adjustment roll
- Sharp, black graduations on the satin finished bar, every .1"
- Hardened stainless steel bar, measuring surfaces, rack, gears, and depth rod
- Positive, spring-loaded double pinion anti-backlash control
- Lock screws for sliding jaw and dial bezel
- Knife-edge contacts
- Adjustable bezel
- 0-6", 0-8" and 0-12" sizes available

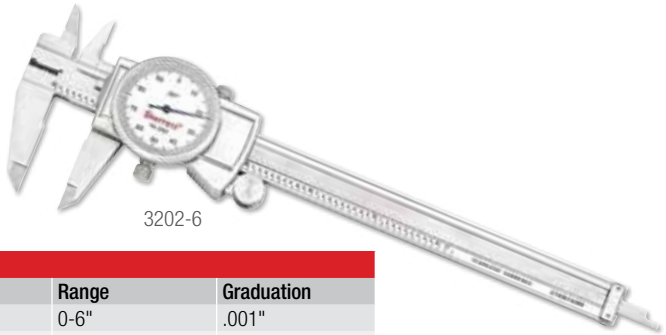

3202-6

3202 Dial Calipers			
Cat. No.	EDP	Range	Graduation
3202-6	61467	0-6"	.001"
3202-8	61468	0-8"	.001"
3202-12	61466	0-12	.001"

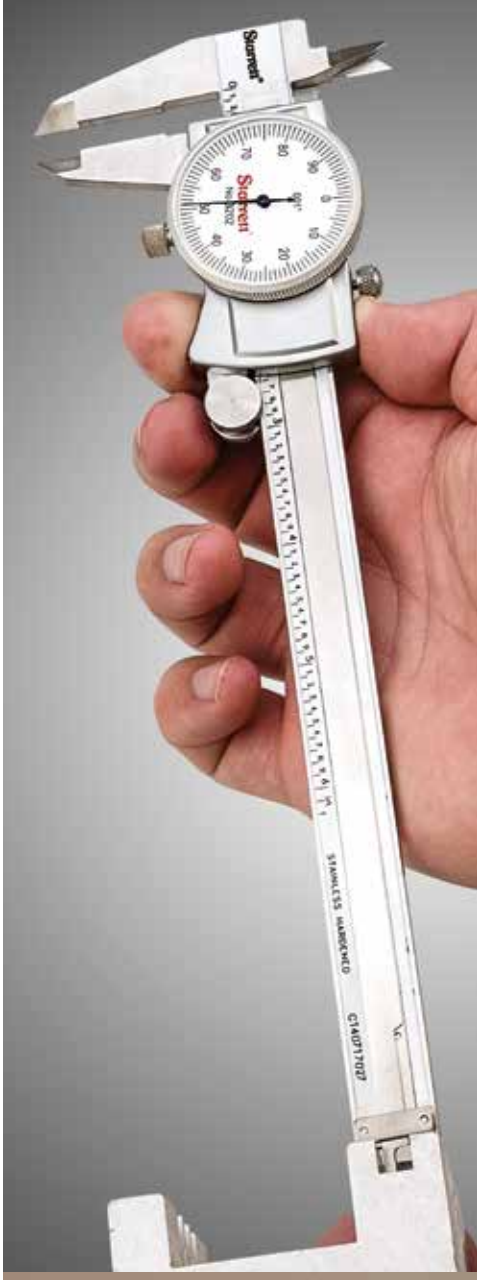

1202F Fractional Dial Calipers

0-12"

The 1202F shows measurements as fractions on the yellow outer scale with 1/64th inch graduations, and decimal measurements on the white inner scale with 1/100th inch graduations.

Features

- 1/64" graduations on the yellow outer scale, and .01" on the white inner scale.
- Except for dial graduation and color, 1202F Calipers have the same features as other 1202 Dial Calipers

1202F-6

1202F Dial Calipers		
Cat. No.	EDP	Range
1202F-6	68931	0-6" Fractional

Dial Calipers

120B, 120MB Dial Calipers with Long Nib Jaws

0-12"/0-300MM

This tool is a direct reading caliper with 3" (75mm) long jaws, ideal for heavy duty use and for gaining access to more measuring area than with conventional calipers. Strong inside and outside nibs measuring from zero for outside measuring and from .300" or 8mm for inside measuring.

120B-12

120B and 120MB Dial Calipers with Long Nib Jaws			
Cat. No.	EDP	Range	Dial Color
120B-12	65067	0-12"	White
120MB-300	65154	0-300mm	Yellow
120MB-300 W/SLC*	66923		

* Includes redemption card for Standard Letter of Certification (SLC).

120J Offset Dial Caliper

0-6"

This tool has an adjustable jaw for versatility when measuring different planes that can't be reached with a regular caliper. The reference jaw is adjustable in height to be either longer or shorter than the sliding jaw. All other features are the same as our 120 Dial Caliper.

- Adjustable jaw – 3-1/2" (88mm) long
- Extends up to 5/8" (16mm) longer than the sliding jaws
- Caliper in deluxe padded case

120JZ-6

120J 0-6" Offset Dial Caliper	
Cat. No.	EDP
120JZ-6	65866

Center Distance Attachment

PT26151

A set of two jaws with body sizes of .400" and conical points, enabling the user to measure the center distance between holes or center-punched locations that are at least .400" apart and less than .400" in diameter.

- Can be used with metric calipers by setting the caliper to 10.16mm
- Will fit Starrett 797, 798 and 120, 6" through 12", 123, 6" through 24", and 1202, 4" through 12" sizes, and 799 6"and 8" sizes

Center Distance Attachment	
Cat. No.	EDP
PT26151	64440

PT26151

Vernier Calipers

123, 123M, 123EM Master Vernier Calipers

0-72" AND 0-24"/0-600MM

Ultimate example of slide caliper design. It is more accurate, has the easiest reading vernier style, is stronger and offered in much longer lengths than other slide calipers.

Readability Features

- Long 50-division vernier scales permit half as many bar graduations as conventional single-vernier tools. These widely-spaced graduations make it easy to read to .001" or 0.02mm
- The open-face design of the slide allows both the inside and outside vernier scale on the same side, thus allowing both verniers to be read without turning the tool over
- Black lines and figures against the Starrett satin chrome finish make reading a pleasure, not an effort
- Screw-type adjusting nut allows for fine measuring adjustments and lock nut holds measurements

Long-Life and Accuracy Features

- Fine tool steel construction makes the jaws harder and longer-wearing than stainless tools. All tools through 24" (600mm) also have hardened and stabilized bars.
- Hardened, ground and lapped measuring surfaces
- Machine divided graduations for accuracy
- The combination straight and angular ways on the master bar allow for positive alignment of graduations and easy adjustment of the flush-fitting verniers
- Sizes through 24" have divider points on the back side to accurately set dividers and trammels
- Tools with inch and millimeter graduations on the same bar have outside readings only. (Inside readings must be compensated for by adding the nib width to the indicated reading.)
- The longer length of the adjusting jaw slide provides a longer bearing surface on the master bar, ensuring squareness with the solid jaw and extra resistance to springing
- Tight, smoothly fitted slides for maximum accuracy and easy adjustment
- Fitted wood case option

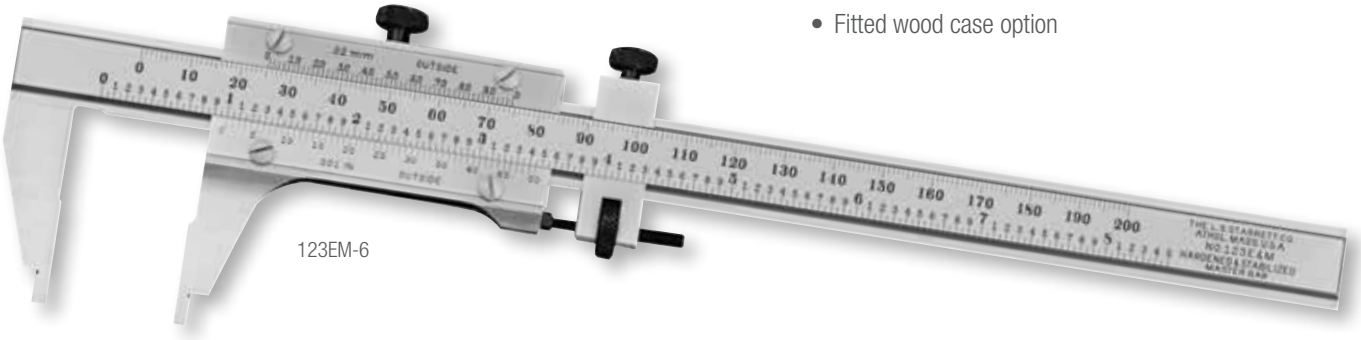

123EM-6

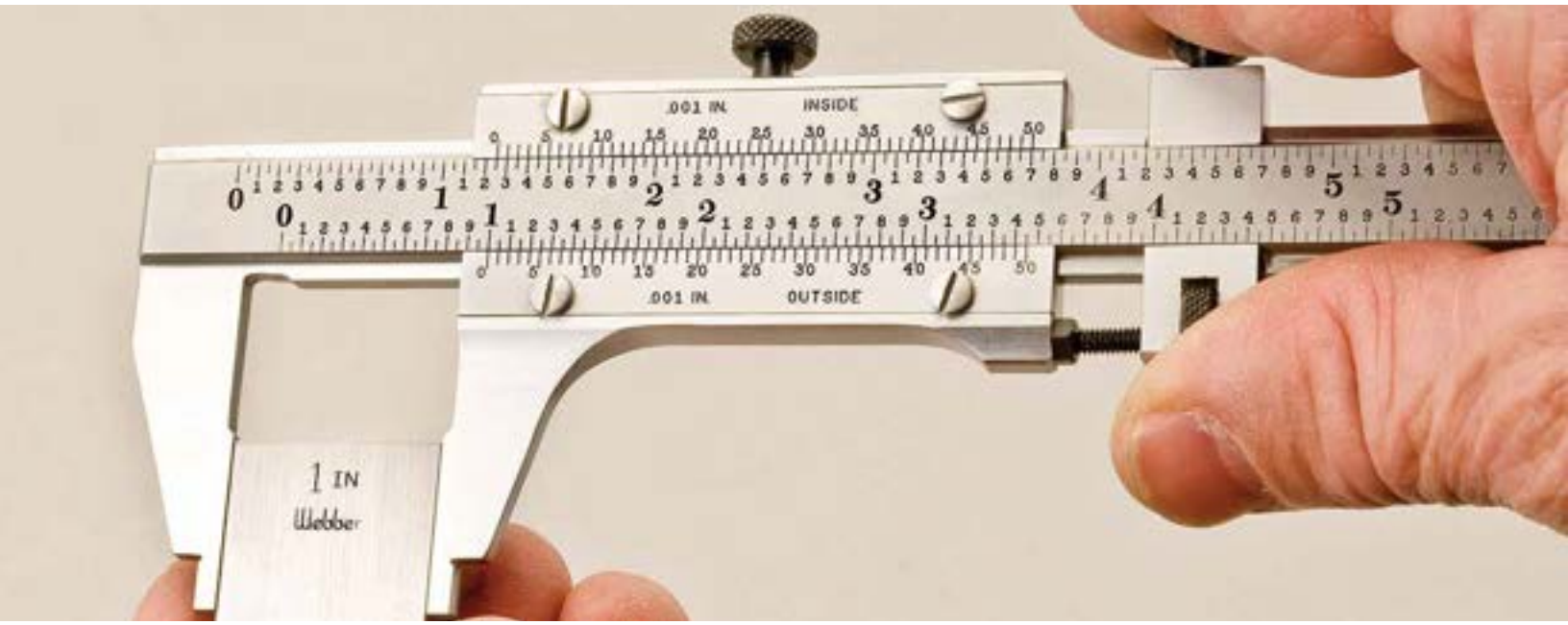

123 Master Vernier Calipers (.001" Graduation)					
Cat. No.	**EDP**	**Range**	**Bar Width**	**Approx. Jaw Depth**	**Max. Nib Width Closed**
123Z-6 123Z-6 W/SLC* 123-6 123-6 W/SLC*	50524 66925 50525 66926	0-6"	11/16"	1-9/16"	.250"
123Z-12 123Z-12 W/SLC* 123-12 123-12 W/SLC*	50526 66927 50527 66928	0-12"	15/16"	2-5/16"	.300"
123Z-24	50528	0-24"	15/16"	2-5/16"	.300"
123Z-36	50530	0-36"	1-3/8"	3"	.500"
123Z-48	50532	0-48"	1-3/8"	3"	.500"
123Z-60	64383	0-60"	2-1/2"	4-1/2"	.750"
123M Master Vernier Calipers (0.02mm Graduation)					
Cat. No.	**EDP**	**Range**	**Bar Width**	**Approx. Jaw Depth**	**Max. Nib Width Closed**
123M-150	56099	0-150mm	17.46mm	40mm	6.4mm
123MZ-300 123M-300	56102 56101	0-300mm	23.81mm	58mm	7.6mm
123MZ-600	56104	0-600mm	23.81mm	58mm	7.6mm
123EM Master Vernier Calipers (.001" and 0.02mm Graduation)					
Cat. No.	**EDP**	**Range**	**Bar Width**	**Approx. Jaw Depth**	**Max. Nib Width Closed**
123EMZ-6 123EM-6	50534 50535	0-6" (150mm)	11/16" (17.46mm)	1-9/16" (40mm)	.250" (6.35mm)
123EMZ-12 123EM-12	50536 50537	0-12" (300mm)	15/16" (23.81mm)	2-5/16" (58mm)	.300" (7.62mm)
123EMZ-24	50538	0-24" (600mm)	15/16" (23.81mm)	2-5/16" (58mm)	.300" (7.62mm)
For Inside Measurements on 123M and 123EM Master Vernier Calipers					
Cat. No.	**Range**	**Add Nib Thickness Below to Caliper Reading**			
123 E and M	0-6" or 150mm	.250" (Inch) or 6.35mm (Metric)			
123 E and M	0-12" or 300mm	.300" (Inch) or 7.62mm (Metric)			
123 E and M	0-24" or 600mm	.300" (Inch) or 7.62mm (Metric)			

Other sizes available on special order – priced on application. Special jaws priced on application.
Hardened Bars on 6", 12" and 24" models: these models are also furnished with center points for dividers.
* Includes redemption card for Standard Letter of Certification (SLC).

123Z-6 with wooden case

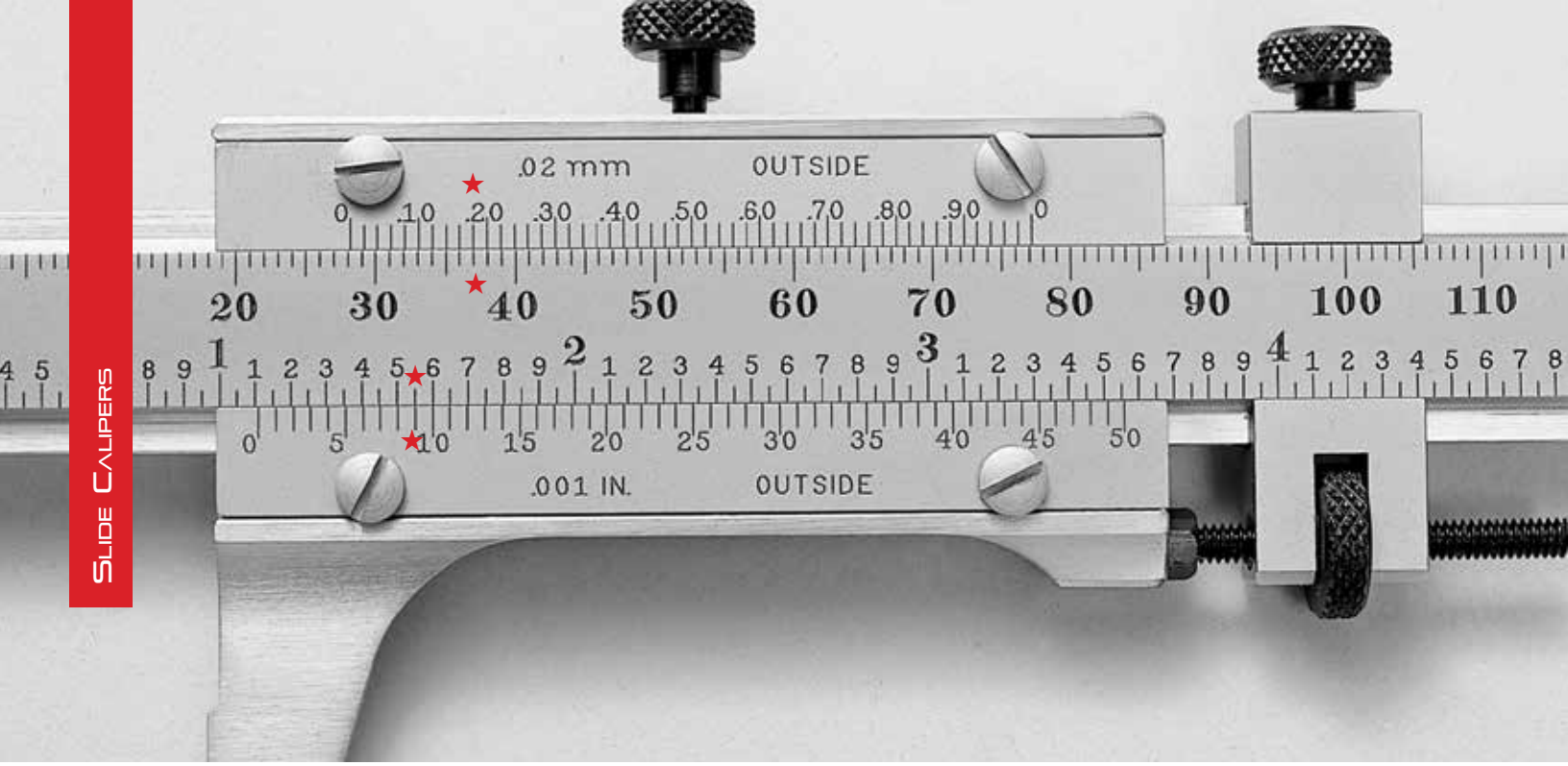

How to Read a Starrett 50-Division Vernier Caliper Gage

GRADUATED IN INCHES AND MILLIMETERS (DIRECT READING)

Inch Reading

- Refer to the lower bar graduations and the inch vernier plate. Inches are numbered in sequence over the full range of the bar. Every second graduation between the inch lines is numbered and equals .100". Each bar graduation is .050"
- The vernier plate is divided into 50 parts, each representing .001". Every fifth line is numbered – 5, 10, 15, 20 … 45, 50 – for easy counting
- To read the gage, first count how many inches and how many .050" lines lie between the zero line on the bar and the zero line on the vernier plate and add them
- Then count the number of graduations on the vernier plate from its zero line to the line that coincides with a line on the bar. Multiply the number of vernier plate graduations you counted by .001" and add this figure to the number of inches and .050" lines you counted on the bar. This is your total reading

Example

★ In the photo, the vernier plate zero line is one inch (1.000") plus .100" beyond the zero line on the bar, or 1.100". The 9th graduation on the vernier plate coincides with a line on the bar (as indicated by stars). 9 x .001" (.009") is therefore added to the 1.100" bar reading, and the total reading is 1.109"

Millimeter Reading

- Refer to the upper bar graduations and millimeter vernier plate. Each bar graduation is 1.00mm. Every tenth graduation is numbered in sequence – 10mm, 20mm, 30mm, 40mm, etc. – over the full range of the bar. This provides for direct reading in millimeters
- The vernier plate is divided into 50 parts, each representing 0.02mm. Every fifth line is numbered in sequence – 0.10mm, 0.20mm, 0.30mm … 0.80mm, 0.90mm – providing for direct reading in hundredths of a millimeter
- To read the gage, first count how many millimeters lie between the zero line on the bar and the zero line on the vernier plate
- Then find the graduation on the vernier plate that coincides with a line on the bar and note its value in hundredths of a millimeter. Add the vernier plate reading in hundredths of a millimeter to the number of millimeters you counted on the bar. This is your total reading

Example

★ In the photo, the vernier plate zero line is 28 millimeters beyond the zero line on the bar, and the 0.18mm graduation on the vernier plate coincides with a line on the bar (as indicated by stars). 0.18 millimeters is therefore added to the 28mm bar reading, and the total reading is 28.18 millimeters

Vernier Calipers

125 Vernier Calipers

0-12"/0-300MM

- High quality, basic vernier caliper that offers inch and metric measurement
- Lock screw for sliding jaw
- Hardened stainless steel depth rod
- Graduations: .001" inch, 0.020mm metric
- Sharp, black graduations on the satin finished bar
- Fitted plastic case

125 Vernier Calipers			
		Range	
Cat. No.	EDP	in	mm
125MEA-6/150	61660	0-6	0-150
125MEA-8/200	61882	0-8	0-200
125MEA-12/300	61886	0-12	0-300

125MEA-6/150

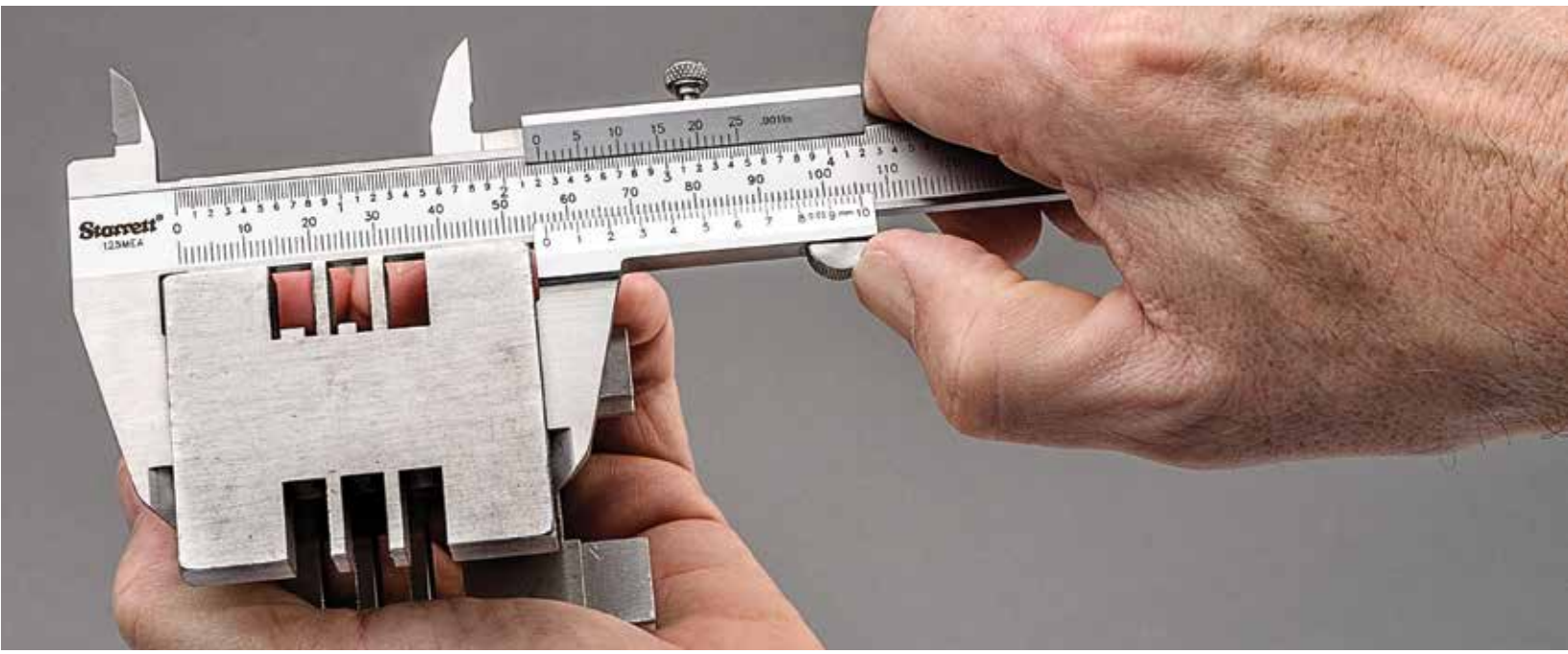

Vernier Calipers

456 Gear Tooth Vernier Calipers

20-2 DIAMETRAL PITCH

456M Gear Tooth Vernier Calipers

1-1/4-25MM MODULE

The 456 Gear Tooth Vernier Caliper is designed to measure in .001" or 0.02mm the thickness of gear teeth at the pitch line (the chordal thickness of the teeth) using the distance from the top of a tooth to the chord. For the same purpose, it can also be used for measuring hobs, form and thread tools, etc.

The thickness of a tooth at the pitch line is measured by an adjustable jaw after the addendum is set by the adjustable tongue. Each of these is adjusted independently by screws on the graduated bars.

Graduation – .001"		
Cat. No.	**EDP**	**Range**
456AZ	52420	20-2 Diametral Pitch
456A	52422	
456BZ	52424	10-1 Diametral Pitch
456B	52426	
Graduation – 0.02mm		
Cat. No.	**EDP**	**Range**
456MAZ	52421	1-1/4-12mm Module
456MA	52423	
456MBZ	52425	2-1/2-25mm Module
456MB	52427	

Available with carbide measuring surfaces on special order. Available with attractive, protective case – sent with case unless otherwise ordered. Packed one in a box.

For Tool Operation:

a. Find on the chart, furnished with the tool, the number of teeth of the gear in question, and find the corrected addendum (s"). This figure is for one diametral pitch for inch measure, so divide it by the diametral pitch number – this figure is also for a one millimeter module for metric measure, so multiply it by the required module number. This gives a corrected addendum for this particular number of teeth.

b. Next, measure the actual outside diameter of the gear and add or subtract one-half the difference between the theoretical gear diameter and actual measured gear diameter from the corrected addendum (s") found in the first step.

c. Set the new calculated addendum figure on the adjustable tongue of the tool.

d. Now, with the tongue on the top of the tooth, measure the chordal thickness with the horizontal vernier jaw and compare with the figure in the "t" column in the chart.

e. All inch graduations are read to .001". However the 456A is graduated by .020" increments and the 456B is graduated by .025" increments. 456MA and 456MB are read to 0.02mm and graduated by 0.5mm increments.

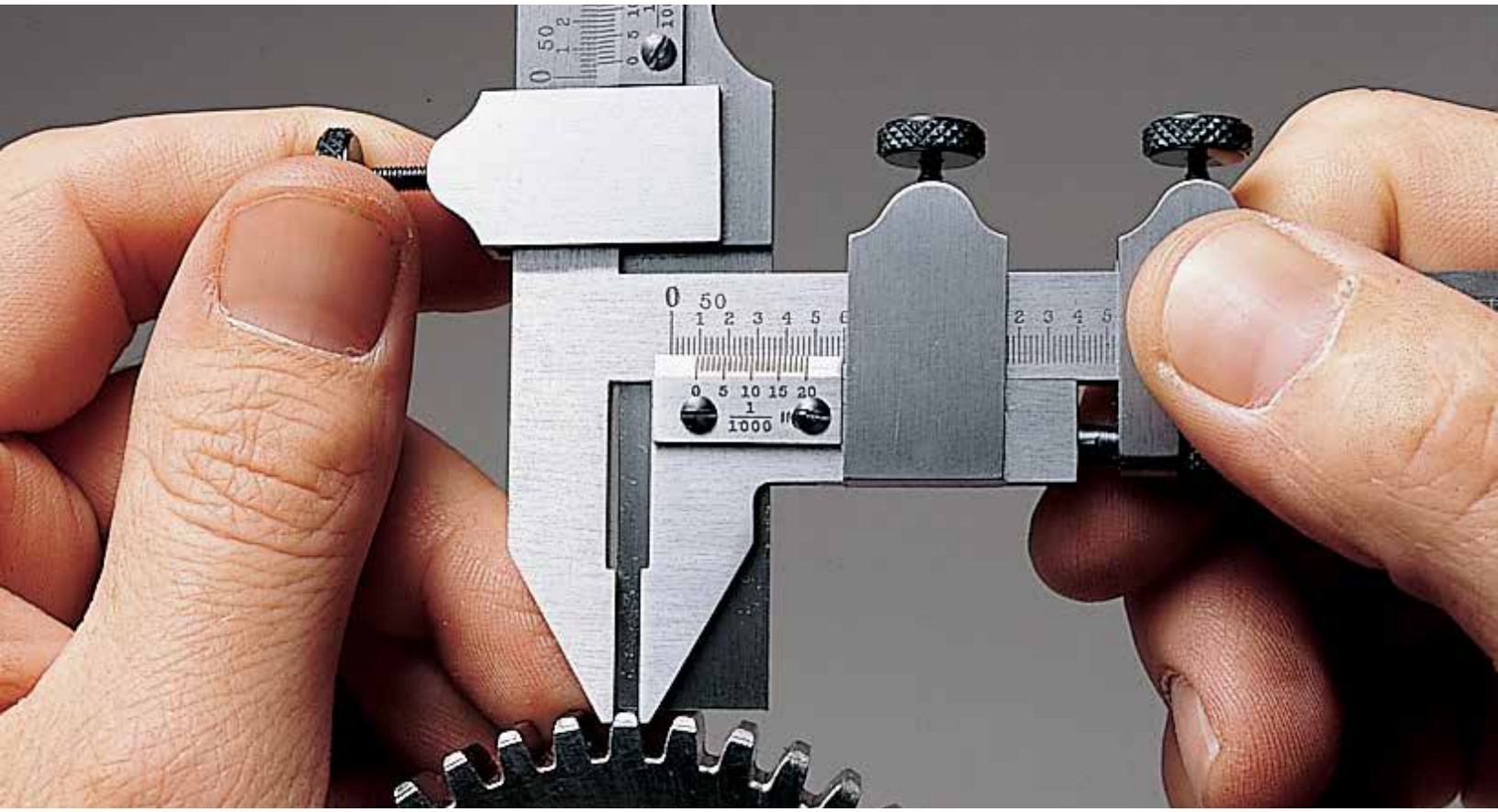

Pocket Calipers

1025, 1025ME Stainless Steel Pocket Slide Calipers

INCH READING 5", 6"/INCH AND MILLIMETER READING 5"/130MM

These handy tools permit quick, accurate outside and inside measurements. Their compact size fits easily in shop coat pockets. Calipers are made of fine quality stainless steel.

- Readings are made directly from the two lines marked "in" and "out" on one side of the stock
- Handy inch or millimeter scale on the back of the stock
- Knurled thumb pieces to activate the slide and slide stop prevents tool from being disassembled
- Knurled clamp screw with a left hand thread for easy one-hand operation
- Straight measuring surface for outside measuring and rounded nibs for inside or hole measurements

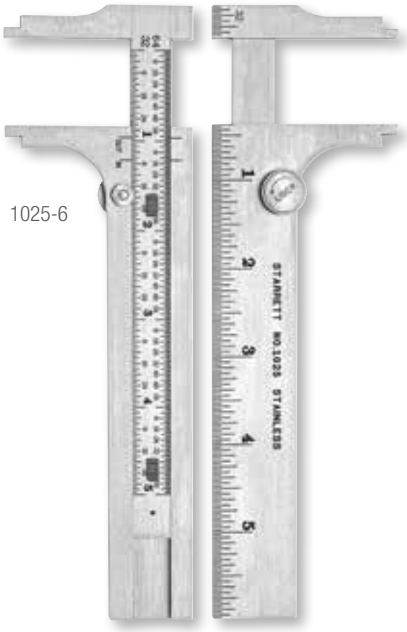

1025-6

1025 Stainless Steel Pocket Slide Calipers								
			Range				Graduations	
Cat. No.	EDP	Size	Outside	Inside	Depth of Jaws	Width of Nibs Closed	Slide	Stock
1025-5	53123	5"	0-3-3/4"	1/4-4"	1-3/8"	1/4"	32nds and 64ths	32nds
1025-6	53124	6"	0-4-3/4"	1/4-5"	1-3/8"	1/4"	32nds and 64ths	32nds
1025ME Stainless Steel Pocket Slide Calipers								
Cat. No.	EDP	Size	Range Outside	Inside	Depth of Jaws	Width of Nibs Closed	Graduations Slide	Stock
1025ME-130	65860	5" (130mm)	0-3-3/4" (0-96mm)	1/4-4" (6–100mm)	1-3/8" or 36mm	.236" or 6mm	64ths and 1/2mm	mm

Cases for 1025 and 1025ME Pocket Slide Calipers		
Cat. No.	EDP	Description
1025ZZ-5	55269	5" and 130mm Vinyl Case
1025ZZ-6	55270	6" Vinyl Case

424 Stainless Steel Pocket Slide Calipers

3-1/2"

This extremely handy caliper gives direct readings of both circumference and diameter in a single setting.

- Especially useful for obtaining instant circumference and diameter measurements of rope, cordage, metal rods, pipe, tubing, etc. and for checking cutting speeds on lathe work
- 1-3/8" deep jaws will caliper a cylinder up to 2-3/4" diameter
- The upper edge of the slide is graduated from 0 to 11 circumference inches in 16ths and the lower edge

424

424 Stainless Steel Pocket Slide Caliper and Circumference Gage							
			Range		Graduations		
Cat. No.	EDP	Size	Dia.	Circumference	Dia.	Circumference	Depth of Jaws
424	51527	3-1/2"	0-3-1/2"	0-11"	32nds	16ths	1-3/8"

Cutting Speed in Feet per Minute = Circumference divided by 12 x Revolutions per Minute

PRECISION MAKES THE DIFFERENCE

GOES THE DISTANCE.

Three major product lines to meet our customer's needs with performance and quality.

Starrett®

(978) 249-3551 • starrett.com

Follow us!

HEIGHT GAGES

Electronic Height Gages

2000 Altissimo® Electronic Height Gages

0-24"/600MM

Altissimo® Electronic Height Gages are innovative, easy-to-use, and loaded with Starrett-exclusive functions for easy-to-program measuring routines that run smoothly and reliably.

2000-24

Features

- A unique, ergonomically shaped base, hardened and ground, that fits your grip just right to easily move the gage and press the hot key
- Hot key allows you to select measuring results on the fly
- 0-24" Measuring Range
- Smart probe that can measure I.D. or O.D. without attachments
- Electronically adjusted probe force
- Large, easy-to-read interactive LCD with unique scanning meter for monitoring probe position
- Electronically adjustable beeper volume
- Bold screen icons indicate the current routine
- Three electronically adjustable resolutions
- Retains the last calibrated diameter of the measuring probe, even after the gage is shut down
- Dynamic bi-directional probing with point and scan modes
- Easy operation with speed wheel, which also has fine-adjust feature
- Locking mechanism for scribing
- Five measurement modes: (ID/OD, Center, TIR, Max/Min, Continuous Display)
- Instant inch/millimeter conversion
- Two selectable Datums and Presets
- Auto Power Off after two hours with retention of probe calibration
- Automatic calculation of eight measurement routines:
  - Center
  - Diameter
  - Height
  - Max
  - Min
  - TIR
  - Distance to last feature
  - Distance between last two points
- Rechargeable NiMH batteries with 100 hours of continuous life
- Seven setup functions:
  - Probe Calibration (2)
  - Beeper Volume
  - Display Resolution
  - Probe Force Adjustment
  - Printer On/Off
  - Force Calibration
- Optional probe kit features a variety of probes for many applications
- Gages include carbide probe, probe holder and probe calibration block
- RS232 data output port
- Starrett capacitive measurement system ensures the accuracy and reliability you expect
- Excellent value – loaded with features and competitively priced

Large, easy-to-view /understand display shows the diameter of a hole or boss

Display showing TIR

Interactive LCD with unique scanning meter for easy probe position viewing

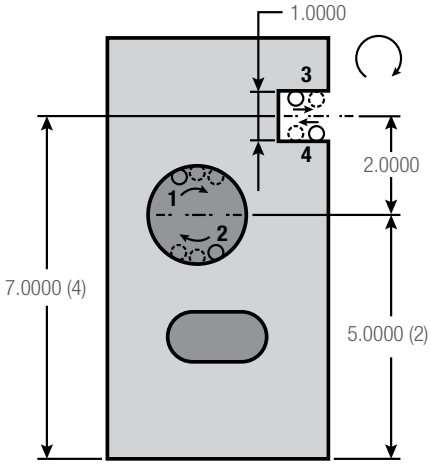

Altissimo includes many routines including diameter of a bore (1 and 2), width of a slot or a rib (3 and 4), distance from datum to center of a hole or slot and distance between features

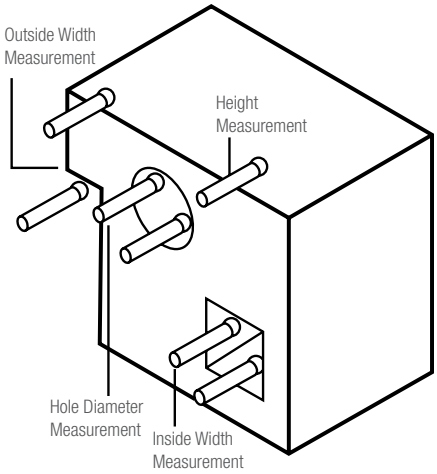

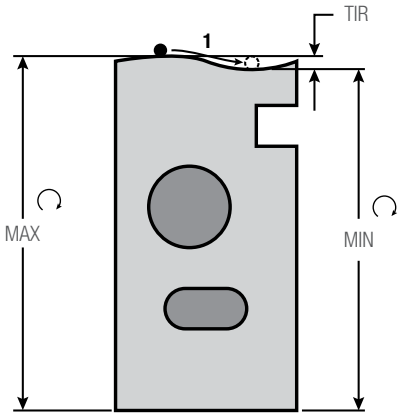

TIR mode can measure the high or low point of a diameter or other surface. The datum can then be set to the max or min value.

Specifications	
Measuring Range	24"/600mm (Extendible to 30"/750mm by rotating the probe holder 180º)
Resolution	.0001"/.0005"/.001" (0.002mm/0.01mm/0.02mm)
Accuracy	±.0003" (0.008mm)
Repeatability	±.0002" (±0.002mm)
Power Source	NiMH Rechargeable Batteries (120V AC/60Hz Charger/Adapter included). Operation time: 100+ hours, Recharging time: 10 hours
Included	.1875"/4.8mm Dia. Carbide Probe, Probe Holder
Accessories	AC Charger/Adapter, Probe Calibration Block
Dimensions	Length 11" (279mm), Width 7-3/4" (197mm), Height 36-1/2" (927mm)
Weight	40 lb (18 kg)
Perpendicularity	.0004" (0.010mm)

Electronic Height Gages

Altissimo® Electronic Height Gages

Contact Wrench, PT27952

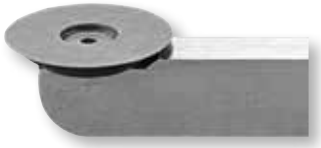

Optional Circular Carbide Scriber, PT27950

Altissimo Electronic Height Gages with Standard Components		
Cat. No.	**EDP**	**Description**
2000-24	67008	Height Gage
PT27937	67009	Carbide Probe .1875" (4.8mm) Dia. (Standard)
PT27940	67010	Probe Holder (Standard)
PT27944	67011	Probe Calibration Block (Standard)
Accessories for Altissimo Electronic Height Gages		
Part No.	**EDP**	**Description**
S2000AZ	66997	Accessory Set Includes:
PT27948	67012	Probe Tip, 5-Way Adapter
PT23942	65255	.040" (1mm) Carbide Contact Point
PT23914	64222	.078" (2mm) Carbide Contact Point
PT23943	65256	.120" (3mm) Carbide Contact Point
PT27952	67013	Contact Wrench
PT27945	67014	.400" (10.2mm) Cylindrical Probe
PT27950	67015	Circular Carbide Scriber
PT27949	67016	Depth Gage Attachment
PT27946	67017	Holder for Dovetail Indicators
PT62011	67018	Replacement Battery Pack, NiMH 6V
PT62015	67002	Power Supply Charger for USA and Canadian Configuration
PT62130	67003	Power Supply Charger for United Kingdom Configuration
PT62131	67004	Power Supply Charger for European Configuration
2000SCM	69907	Cable to 7612 or 7613 Multiplexer
2000SCKB	69908	USB cable to PC (In focused window)
2000SCU	29728	Cable to PC Running Data Collection SPC Software - USB

Electronic Height Gages

3751 Electronic Height Gage (without output)

0-6"/150MM

This height gage is light, portable and easy to use for vertical measurements within its range.

3751 Electronic Height Gage (0-6"/150mm Range)		
Cat. No.	**EDP**	**Description**
3751AZ-6/150	12221	Height Gage, in Case
Accessories and Cables for 3751 Electronic Height Gage		
Part No.	EDP	Description
PT99492	65650	One 3-Volt Batteries, CR2032
PT08680A	51383	Depth Attachment for 6" (150mm) Height Gages
947	56756	Wood Case Only

3751AZ-6/150

Readability Features

- Easy-to-read LCD .32" high characters

Accuracy and Long Life Design Features

- Hardened, stainless steel bar for long life
- Depth attachment PT08680A available for measuring depth of holes, slots, and recesses
- Fine adjustment thumb roll for precision measurements
- Rounded nose scriber cuts clean, sharp lines with smoothness and less pressure
- Lock to hold the slide in position
- Hardened, ground, and lapped base with finger grooves provides ease of movement
- Easy access to single long-life battery, 3-volt CR2032
- Vertical bar is back from the edge of the nose for better stability
- Scriber can reference zero from the bottom of the base to get the full 6" (150mm) usable range
- Linear Accuracy: ±.001" (± 0.02mm)
- Resolution: .0005" (0.01mm)

Action Features with Three Control Buttons

- Inch-millimeter conversion
- Zero at any position
- Manual ON/OFF plus a built in automatic OFF after 5 minutes of nonuse

Electronic Height Gages

3754 Electronic Height Gages

The 3754 Electronic Height Gage is a full featured, versatile and economic solution for most height measurement applications. All measuring information from these tools can be entered directly into Starrett Data Collection Systems for analysis, data collection and hard copy documentation. It is available in 0-12" and 0-24" ranges.

Features

- Large (.380"/9.65mm), easy to read LCD display reads to .0005" or 0.01mm
- Large positive keypad
- Relative scale
- Fine adjust
- Furnished with two (2) 3-volt batteries (CR2032) and carbide tip scriber
- Improved battery cover

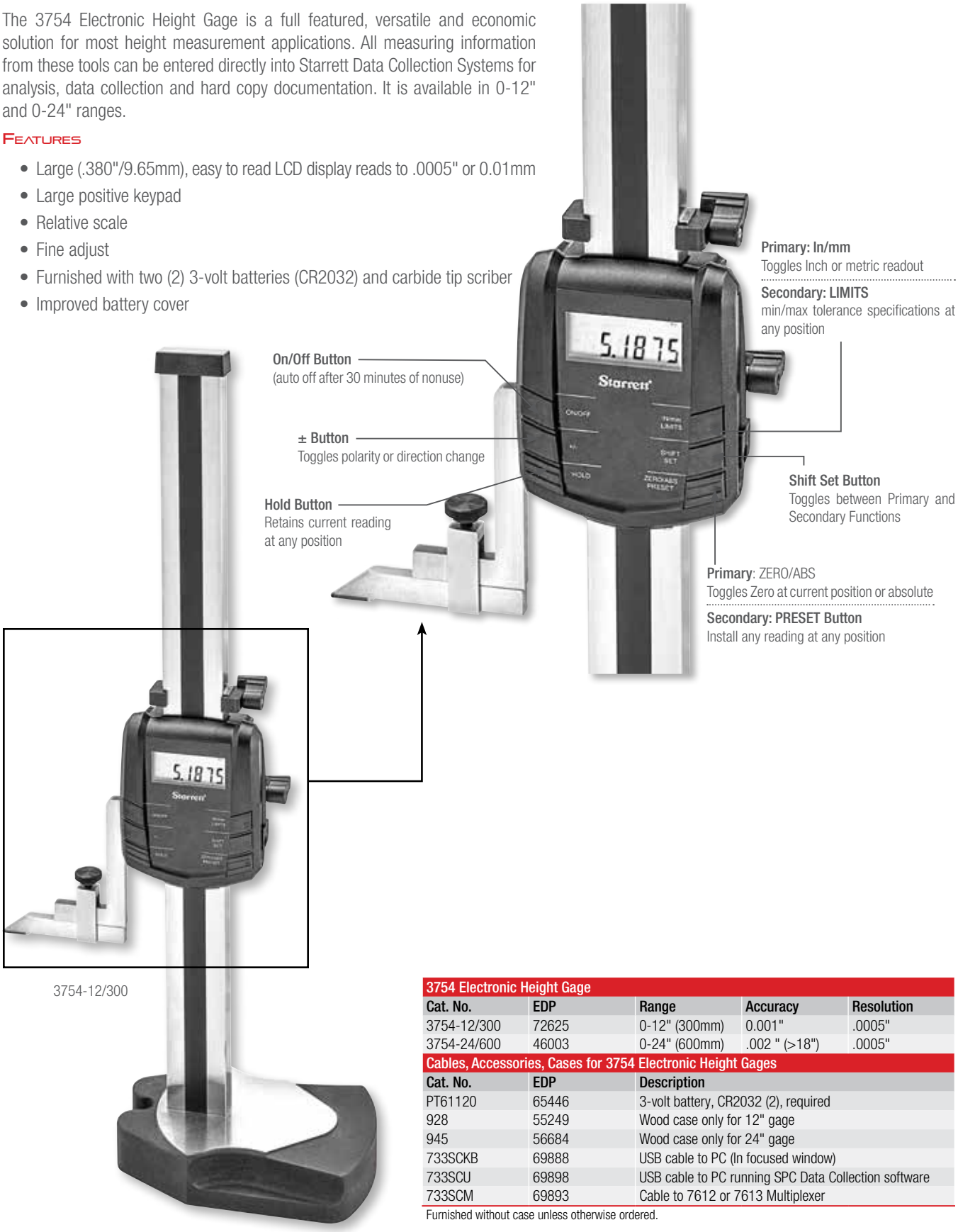

3754-12/300

3754 Electronic Height Gage				
Cat. No.	**EDP**	**Range**	**Accuracy**	**Resolution**
3754-12/300	72625	0-12" (300mm)	0.001"	.0005"
3754-24/600	46003	0-24" (600mm)	.002 " (>18")	.0005"

Cables, Accessories, Cases for 3754 Electronic Height Gages		
Cat. No.	**EDP**	**Description**
PT61120	65446	3-volt battery, CR2032 (2), required
928	55249	Wood case only for 12" gage
945	56684	Wood case only for 24" gage
733SCKB	69888	USB cable to PC (In focused window)
733SCU	69898	USB cable to PC running SPC Data Collection software
733SCM	69893	Cable to 7612 or 7613 Multiplexer

Furnished without case unless otherwise ordered.

How to Read a Starrett 50-Division Vernier Height Gage Graduated in Inches and Millimeters (Direct Reading)

Inch Reading

- Refer to the left side bar graduations and the inch vernier plate. Inches are numbered in sequence over the full range of the bar. Each bar graduation is .050". Every second graduation between the inch lines is numbered and equals .100".
- The vernier plate is divided into 50 parts, each representing .001". Every fifth line is numbered – 5, 10, 15 … 45, 50 – for easy counting.
- To read the gage, first count how many inches and how many .050" lines lie between the zero line on the bar and the zero line on the vernier plate and add them.
- Then count the number of graduations on the vernier plate from its zero line to the line that coincides with a line on the bar. Multiply the number of vernier plate graduations you counted by .001" and add this figure to the number of inches and .050" lines you counted on the bar. This is your total reading.

Example

★ In the photo, the vernier plate zero line is five inches (5.000") plus .750" beyond the zero line on the bar, or 5.750". The 25th graduation on the vernier plate coincides with a line on the bar (as indicated by stars). 25 x .001 (.025") is therefore added to the 5.750" bar reading, and the total reading is 5.775".

Millimeter Reading

- Refer to the right side bar graduations and millimeter vernier plate. Each bar graduation is 1.00mm. Every tenth graduation is numbered in sequence – 10mm, 20mm, 30mm, etc. – over the full range of the bar. This provides for direct reading in millimeters.
- The vernier plate is divided into 50 parts, each representing 0.02mm. Every fifth line is numbered in sequence – 0.10mm, 0.20mm, 0.30mm … 0.80mm, 0.90mm – providing for direct reading in hundredths of a millimeter.
- To read the gage, first count how many millimeters lie between the zero line on the bar and the zero line on the vernier plate.
- Then find the graduation on the vernier plate that coincides with a line on the bar and note its value in hundredths of a millimeter. Add the vernier plate reading in hundredths of a millimeter to the number of millimeters you counted on the bar. This is your total reading.

Example

★ In the photo, the vernier plate zero line is 146 millimeters beyond the zero line on the bar, and the 0.68mm graduation on the vernier plate coincides with a line on the bar (as indicated by stars). 0.68 millimeters is therefore added to the 146 millimeter bar reading, and the total reading is 146.68 millimeters.

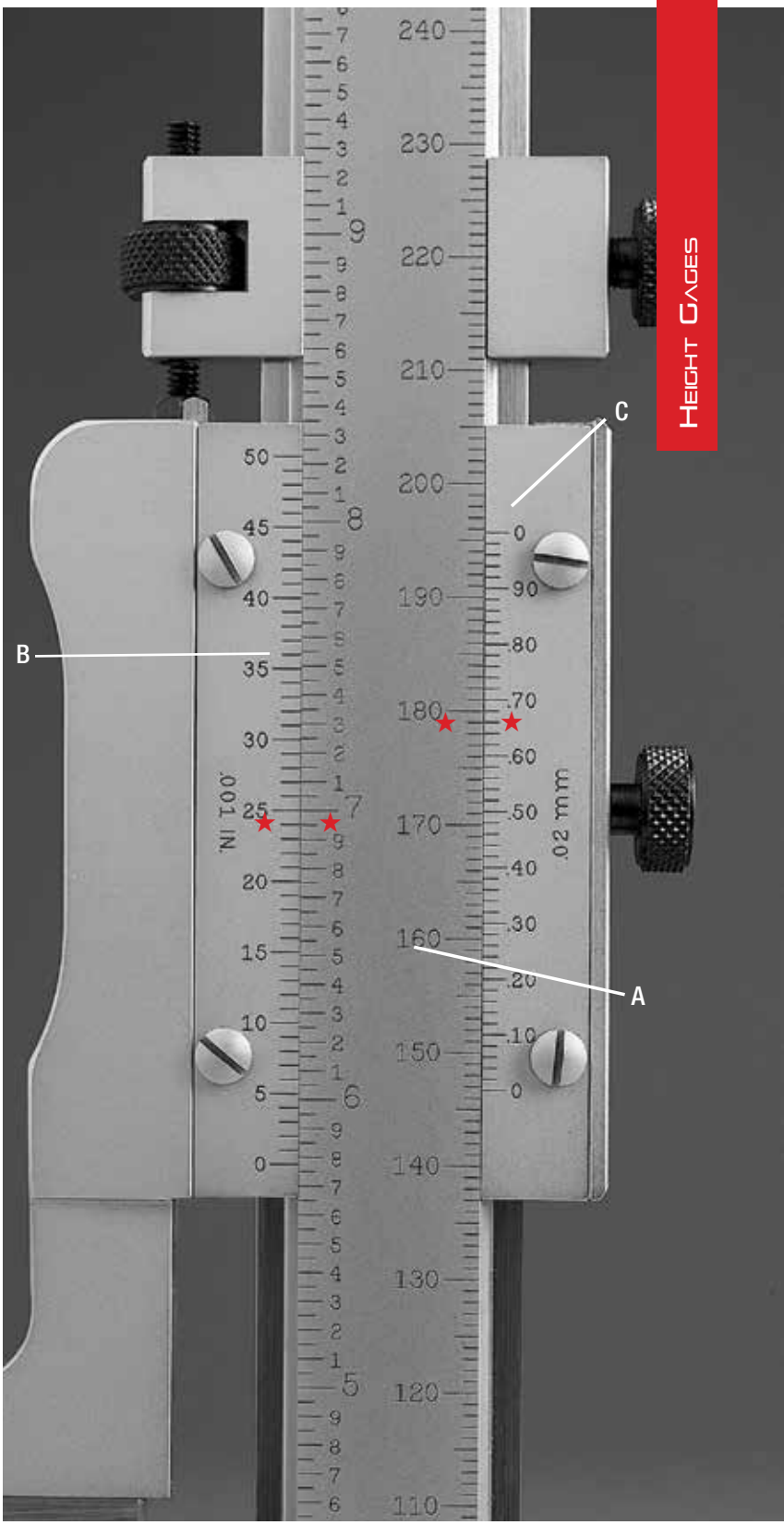

Open-face long Vernier with 50 widely spaced graduations for easy reading. Flush-fitting Vernier and master bar eliminates parallax.

A. Master Bar
B. Inch Vernier Plate
C. Millimeter Vernier Plate

Vernier Height Gages

254, 254M Master Vernier Height Gages

0-72"/0-900MM

254EM Master Vernier Height Gages

0-24"/0-600MM

This Master Vernier Height Gage is an accurate, rugged and reliable tool that gives precise and dependable measurements over long ranges. It has an easy-to-read vernier, is stronger, and is offered in greater ranges than other height gages.

Readability Features

- Long, 50-division vernier scales permits half as many bar graduations as single vernier tools. These widely spaced graduations provide easy reading to .001" or 0.02mm
- Flush fitting of the vernier scales to the main scale eliminates parallax
- Vernier scales are adjustable
- Black lines and figures against Starrett satin chrome finish make reading easy
- Scriber and base are designed for direct reading from zero (bottom of base)

Ease-of-Handling Features

- Quick-adjust release on the slide allows for fast positioning
- Extremely fine adjustments by a knob on the base isolating the column and slide from external pressures
- Additional remote fine adjustment located on top of the bar for sizes 36" (900mm) and larger
- Special master bar design and the balanced design and weight of the base eliminates vibration
- Master bars on models up to 24" and 600mm are hardened and stabilized
- Base is hardened, ground, and lapped square with the bar and has finger grooves to provide ease of movement
- Vertical bar is positioned near the center of the base for balance and stability
- Versatile tool will scribe lines, mount dial indicators or electronic probes, and accept depth attachments
- Tool can also be used with our 359 Protractor for checking angles

254 Master Vernier Height Gages (.001" Graduation)			
Cat. No.	**EDP**	**Range**	**Approximate Base Dimensions**
254Z-12	51219	0-12"	5-7/8" x 3-7/8"
254Z-18	51220	0-18"	7-1/2" x 4-1/2"
254Z-24	51221	0-24"	
254Z-36	51222	0-36"	10" x 6-1/2"
254Z-48	51223	0-48"	
254Z-60	56183	0-60"	
254Z-72	56184	0-72"	
254M Master Vernier Height Gages (0.02mm Graduation)			
Cat. No.	**EDP**	**Range**	**Approximate Base Dimensions**
254MZ-300	56214	0-300mm	150mm x 95mm
254MZ-450	56215	0-450mm	190mm x 115mm
254MZ-600	56216	0-600mm	
254MZ-900	56217	0-900mm	250mm x 165mm
254EM Master Vernier Height Gages (.001"/0.02mm Graduation)			
Cat. No.	**EDP**	**Range**	**Approximate Base Dimensions**
254EMZ-12	51224	0-12"/300mm	5-7/8" x 3-7/8"
254EMZ-18	51225	0-18"/450mm	7-1/2" x 4-1/2"
254EMZ-24	51226	0-24"/600mm	
Accessories for 254, 254M and 254EM Master Vernier Height Gages			
Part No.	**EDP**	**Description**	
PT22357	12295	Auxilliary Straight Carbide Scriber	
PT28131	67007	Auxilliary Circular Carbide Scriber	
PT05409A	51227	Depth Gage Attachment	

Hardened bars on all sizes through 24" and 600mm
Furnished with Auxilliary Straight Carbide Scriber. Shown with optional Auxilliary Circular Carbide Scriber.

Quick-adjusting screw release allows rapid slide movement to desired area, then precisely position with the fine adjustment knob

Precise positioning with fine-adjustment knob on the base isolates column and slide from external pressures

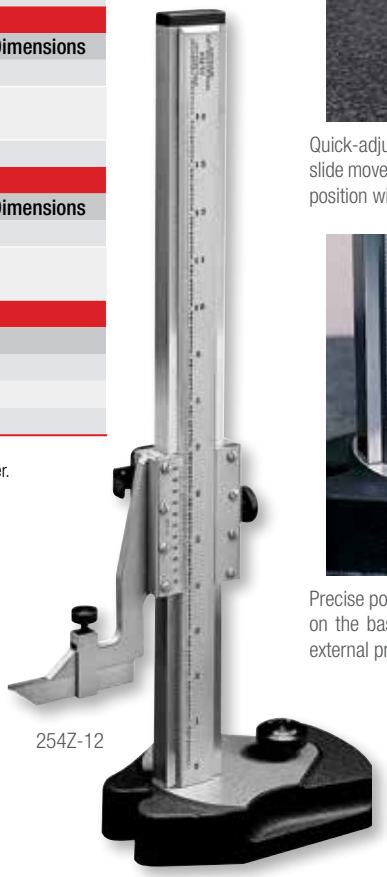

254Z-12

Vernier Height Gages

255, 255M Vernier Height Gages

0-18"/0-300MM

255EM Vernier Height Gages

0-18"/0-450MM

This tool is the "baby brother" of the 254 Master Vernier Height Gage. It is essentially the same tool, but a much lighter version for normal use where heavy duty applications are not practical. The 18" and 450mm models weigh 3-1/4 lb (1.5kg). No other height gage features this favorable combination of design, weight and accuracy.

Readability Features

- Long, 50-division vernier scales that can be read to .001" or 0.02mm without a magnifying glass
- Flush-fitting of the vernier scales to the main scale eliminates parallax
- Easy-reading sharp black lines and figures against Starrett satin chrome finish background
- The scriber and the base are designed so that the gage will read directly from zero

Ease-of-Handling Features

- Slides easily for quick adjustment and has a screw type adjusting nut on the bar for precise positioning
- The design of the hardened and stabilized bar plus the balanced design and weight of the base eliminate vibration
- The base is hardened, ground, and lapped and is hand shaped for sure grip and easy movement
- The vertical bar is positioned near the center of the base for balance and stability
- Ability to scribe lines, measure with dial indicators or electronic probes and accept depth attachments
- The auxiliary scriber is a circular carbide scriber – cuts sharp, clean lines smoothly – rotatable for wear

255 Vernier Height Gages (.001" Graduation)					
Cat. No.	**EDP**	**Range**	**Bar Approximate (Width x Thickness)**	**Base Approximate (Length x Width)**	**Description**
255Z-12 255-12	51229 51230	0-12"	15/16" x 7/32"	4-7/16" x 2-9/32"	In Case Without Case
255Z-18 255-18	51231 51232	0-18"	15/16" x 7/32"	4-7/16" x 2-9/32"	In Case Without Case
255M Vernier Height Gages (0.02mm Graduation)					
Cat. No.	**EDP**	**Range**	**Bar Approximate (Width x Thickness)**	**Base Approximate (Length x Width)**	**Description**
255MZ-300 255M-300	56218 56219	0-300mm	24mm x 5.5mm	113mm x 58mm	In Case Without Case
255EM Vernier Height Gages (.001"/0.02mm Graduation)					
Cat. No.	**EDP**	**Range**	**Bar Approximate (Width x Thickness)**	**Base Approximate (Length x Width)**	**Description**
255EMZ-18 255EM-18	65160 65161	0-18"/450mm	15/16" x 7/32" (24mm x 5.5mm)	4-7/16" x 2-9/32" (113mm x 58mm)	In Case Without Case

Accessories for 255, 255M and 255EM Vernier Height Gages		
Part No.	**EDP**	**Description**
PT13791	71460	Straight Scriber
PT27710	67187	Carbide Scriber (3/16" x 25/64" x 2-3/4")
PT08962A	51233	Depth Gage Attachment

Furnished with Straight Scriber.

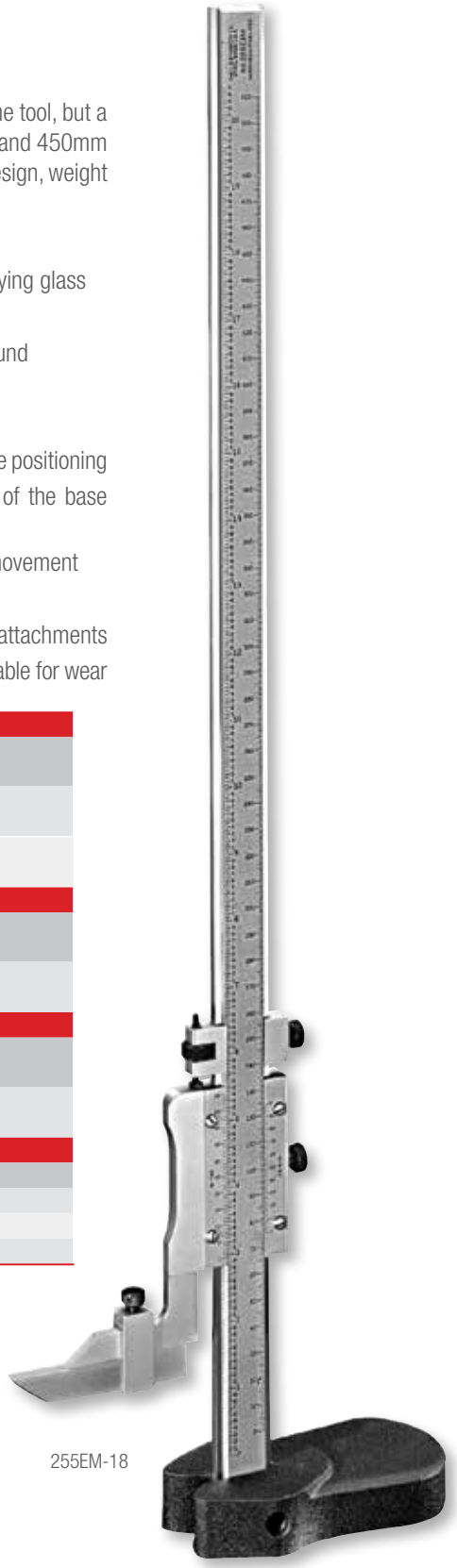

255EM-18

Dial Height Gages

3250 Dial Height Gages

0-6"/0-150MM

The compact 3250 Dial Height Gage is a very useful tool for machinists and inspectors. Applications include scribing lines for layout, height measurement (with or without dial test indicator), and depth measurement (with optional attachment). It is simple to use, reliable, accurate, and fits into most toolboxes.

3250 Height Gages

Cat. No.	EDP	Range	Dial Grads	Description
3250Z-6	69865	0-6"	.001"	Dial Height Gage, English
3250MZ-150	69861	0-150mm	0.20mm	Dial Height Gage, Metric
PT08680A	51383			Depth Attachment

Features & Specifications

- Sharp, clear dial graduations of .001" or 2mm in one revolution
- Sharp, black graduations on the satin chrome finish bar every .100" or 1mm
- Fine adjustment thumb roll for precision measurements
- Vertical bar set back from the edge for better stability
- Hardened, ground, and lapped base with finger grooves for control and ease of movement
- Base clearance allows the gage to measure full gage range of 0 - 6" or 150mm
- Dial lock screw
- Lock to hold the slide in position
- The auxiliary scriber has a rounded nose for cutting clean, sharp lines with smoothness and less pressure
- Hardened, stainless steel bar, rack, gears, scriber, and scriber carrier
- Positive spring-loaded double pinion anti-backlash control
- Includes metal case

3250-6

3250-6 in case

Digi-Chek™ Height Gages

DHG DIGI-CHEK™ II Height Master

RANGES UP TO 85" AND 2150MM

These are the world's fastest and most precise height masters, ideal for those who need the highest degree of accuracy over an extremely long vertical range.

DIGI-CHEK II Height Master (1-85" Range)		
Cat. No.	**EDP**	**Capacity**
DHG 25.	93265	1-25"
DHG 37.	93266	1-37"
DHG 49.	93267	1-49"
DHG 61.	93268	1-61"
DHG 73.*	93269	1-73"
DHG 85.*	93270	1-85"
DIGI-CHEK II Height Master (25-2150mm Range)		
Cat. No.	**EDP**	**Capacity**
DHG 625.	93271	25-625mm
DHG 1025.	93272	25-1025mm
DHG 1225.	93273	25-1225mm
DHG 1550.	93274	25-1550mm
DHG 1800.*	93640	25-1800mm
DHG 2150.*	93275	25-2150mm

* Setup charge extra depending on location.

Optional Equipment for DIGI-CHEK II Height Master		
Cat. No.	**EDP**	**Description**
HG 525.60 (Inch)	92579	Reverse Reading Blocks
HG 501.3M (Millimeter)	91486	
HG 525.61 (Inch)	92577	1" or 25mm base blocks for use with reverse reading blocks to set dial bore gages
HG 501.4M (Millimeter)	91487	
CS 9133.	92320	Finished wood case for reverse reading and base block

Specifications for DIGI-CHEK II Height Master		
Description	**Inch System**	**Metric System**
Tolerance (Stack)	expressed in µin	expressed in µm
Maximum:	2.5L + 10 (in inches)	.0025L + .25 (in mm)
Minimum:	-10	- .25
Parallelism: Gage Surfaces to Base and Each Other	15 µin	0.4 µm
Resolution	10 µin or 20 µin	0.5 µm or 1.0 µm
Repeatability of Readout	±20 µin	0.5 µm or 1.0 µm
Digital Readout	1/2" high figures	12.5mm
Readout Pedestal Height	38"	970mm
Power Supply	Switchable: 115 V 60 Cycle or 220 V 50 Cycle	
Certificate of Calibration (Extra Cost)	expressed in µin	expressed in µm
Uncertainty of Calibration of Stack	10 + 2.0L (in inches)	.25 + .002L (in mm)
Uncertainty of Calibration of Readout	±30 µin	±0.75 µm

µ = .000001 x unit of measure
The accuracy of the surface that supports the gage must be taken into account when determining the accuracy of any measurements.

- Can be used in the laboratory or on the shop floor
- Lower inspection costs by saving time – within 10 seconds the tool can be set into position
- The gage block stack is free-standing, so it will adapt to temperature differences in a reasonable time period
- 1" or 25mm range of adjustment
- Reverse reading block allows readings from the underside of the master gage blocks
- The large, remote digital readout can be placed in the most convenient location and adjusted for best readability
- The housing is heavy and extremely stable with hardened and lapped three-point bearings
- Standard equipment: pedestal stand for readout unit, DIGI-CHEK II plastic dust cover and wood shipping/storage case

Simple, two step operation in less than 10 seconds.

1. Set rapid positioner (A) to within .005" (0.15mm) (3 seconds).
2. Final setting (5 seconds).

Digi-Chek™ Height Gages

258, 258M Digi-Chek™ Height Gages

.100"-24.100"/2-602MM

These gages combine the accuracy of Starrett-Webber Gage Blocks with a precision micrometer head and digital readout.

258 DIGI-CHEK Height Gages (.100"-24.100" Range)						
Cat. No.	EDP	Range	Graduation Scales	Digital Readout	Micrometer Head	Gage Accuracy
DHG12-258	93005	.100"-12.100"	Inches	.001"	.0001"	±.0002"
DHG18-258	93006	.100"-18.100"		.001"	.0001"	±.0002"
DHG24-258	93357	.100"-24.100"		.001"	.0001"	±.0002"
258M DIGI-CHEK Height Gages (2-602mm Range)						
Cat. No.	EDP	Range	Graduation Scales	Digital Readout	Micrometer Head	Gage Accuracy
DHG300-258	93007	2mm-302mm	Millimeters	0.01mm	0.002mm	±.005mm
DHG450-258	93008	2mm-452mm		0.01mm	0.002mm	±.005mm
DHG600-258	93358	2mm-602mm		0.01mm	0.002mm	±.005mm

Finished wood case for 12" (300mm) and 18" (450mm) also available, at additional cost.
These finished wood cases are NOT suitable for shipping. Use suggested shipping materials.
Certificate of Calibration available at additional cost.
Questions and repair regarding Digi-Chek gages should be referred to the Starrett-Webber Division, Tel.: 440-835-0001.
The accuracy of the surface that supports the gage must be taken into account when determining the accuracy of any measurements.

DGH12-258 with digital display

DGH12-258 with analog display

Readability Features

- Satin chrome scales mounted beside the gage block column for quick reference to the nearest 1" or 25mm reading
- Digital readout reads in .001" or 0.01mm and has a range of 1" or 25mm
- Reads directly from the micrometer head to .0001" or 0.002mm. The micrometer head (our 469) has black figures on the satin chrome thimble. The graduations are staggered for easy counting.
- Both the micrometer head and digital readout are mounted on top of the gage, directly in line with the operator's vision

Ease-of-Handling Features

- The micrometer head has a speeder knob for rapid positioning
- Both over and under heights can be checked directly from the gage blocks in a single setting. Because reference surfaces are provided on the top and bottom of each block, adjacent blocks are in the exact same plane. This eliminates the need to add or subtract block thickness.
- Readings can also be taken from either left, center, or right of the gage block column
- Parts can be checked from .100" or 2mm in height
- The gage block column design permits wringing a 1" block between two blocks in the column. This is convenient for setting and checking other gages such as inside micrometers, end measuring rods, dial bore gages, etc.

Accuracy and Long-Life Features

- Gage is housed in a heavily flanged frame for stability and the base has three-point hardened, ground, and lapped bearing pads, making it virtually tip-proof. Gage blocks are assembled in a free-standing system that allows the blocks to conform to temperature variations independently of the frame, thereby reading the same as the workpiece.
- The highly accurate micrometer spindle is one piece, with hardened and stabilized measuring threads
- A 10" riser block is available for increased height capacity

Height Gage Accessories

Depth Gage Attachments for Height Gages

These attachments replace standard scribers and measure the depths of holes and slots, recesses; inside of jigs, fixtures; and over high projections.

They have adjustable rods which are held in the desired position by a knurled binding nut. The ends have a slight radius for point contact on the work.

Right: PT08680A
Middle: PT08962A
Left: PT05409A

Depth Gage Attachments for Height Gages			
Part No.	EDP	Rod Length	Fits Starrett Height Gage No./Size
PT08962A	51233	6" (150mm)	255 8", 12", 18", 300mm, 450mm
PT05409A	51227	8" (200mm)	254 12", 18", 24", 300mm, 450mm, 600mm and all Metric and English 259, 180 and 240, 3752 120 (300mm) and 240 (600mm), 755 240 (600mm)
PT08680A	51383	6" (150mm)	751

258RRB, 258RRBM Reverse Reading Blocks for 258 Digi-Chek™ Height Gage

Used on 258 DIGI-CHEK™ Height Gages for the precise calibration of working gages and for setting dial bore gages. The block fits in alternate inch positions, its tongue entering the odd numbers and its groove entering the even numbers of the gage block stack.

258RRB and 258RRBM Reverse Reading Blocks		
Cat. No.	EDP	Description
HG 258.RRB	92433	Fits 12", 18" and 24" Gages
HG 258.RRBM	92434	Fits 300mm, 450mm and 600mm Gages

258RRB

258R, 258MR Riser Blocks for 258 Digi-Chek™ Height Gage

Increases the range of Inch reading 258 DIGI-CHEK™ Height Gages by 10" and metric reading 258 DIGI-CHEKs™ by 250mm. Heavily flanged for rigidity and stability. Both top and base have three ground and lapped pads to match the pads on the DIGI-CHEK™ base. Retaining plate prevents the DIGI-CHEK™ from being pushed or sliding off the pads. Attractive black wrinkle finish. If desired, riser blocks can be stacked one on top of another.

258R Riser Blocks (10" Blocks)			
Cat. No.	EDP	Accuracy	For:
HG 258.R	99865	±.000040"	12" Gage
HG 258.RA	99866		18" Gage
258MR Riser Blocks (250mm Blocks)			
Cat. No.	EDP	Accuracy	For:
HG 258.MR	99867	±0.001mm	300mm Gage
HG 258.MRA	99868		450mm Gage

258R

Height Gage Accessories

252 Height Transfer Gages

0-48"/0-1200MM

The 252 Height Transfer Gage is ideal for use with test indicators or electronic amplifiers to accurately transfer height settings from gage blocks, height gages and other standards.

252 Height Transfer Gages

Cat. No.	EDP	Range	Fine Adjustment (Approximate)	Base Size - L x W (Approximate)	Gage Rod Dimension
252Z-14	55890	0-14" (350mm)	3/8" (9.5mm)	5-3/4" x 3-1/2" (145 x 90mm)	9" L x .375" Dia. (225 x 9.5mm) with steps
252Z-24	51216	0-24" (600mm)		7-1/2" x 4-1/2" (190 x 115mm)	
252Z-48	51217	0-48" (1200mm)		9" x 6" (225 x 150mm)	

Larger sizes available on special order.
Starrett 708, 709, 711, 650 Test Indicators; 25, 81, 196, 655, 656 Dial Indicators and supplementary attachments also available.
Gage furnished with 9" (225mm) Rod and PT06784-A Gage Holding Rod in wood case.

Pictured with 717 Gage Amplifier and 715-12 lever probe.

Accuracy and Long-Life Features

- Extreme rigidity provides the vibration-proof stability necessary to permit precise repeat readings with indicators of the highest amplification
- Extremely rigid, rectangular box-type hollow column mounted integrally on a heavy base
- Adjusting mechanism is located in the base so the column and indicator are isolated and not affected by external factors, such as heat or hand pressure

Ease-of-Operation Features

- Hand-fitting base design for sure-grip handling and easy movement
- Bottom of the base has three ground and lapped pads for stability and smooth movement on the surface plate
- Adjustable slide, incorporating a snug for holding test indicators or electronic gage heads, has rapid vertical manual adjustment
- Thumb screw allows slide to be locked
- Knob on base allows fine vertical adjustment of the slide unit relative to the fixed column. This permits the slide with its test indicator to be quickly and precisely adjusted to the desired setting.

Tool and Gaging Holders

- A snug on the slide provides two holes (.375" [9.5mm] and .156" [4mm]) for holding gage rods or scribers. A 9" (225mm) rod furnished with the gage is especially useful for reaching confined areas or reaching heights greater than the range of the gage.
- The rod has a major diameter of .375" (9.5mm) and stepped diameters of 1/4" (3.2mm) and 7/32" (5.5mm) at one end and 5/16" (8mm) at the opposite end
- 708 and 709 Test Indicators can be mounted on this rod using PT22428 swivel clamp. 196 Universal Back-Plunger Indicators can be mounted using Starrett snugs, Part PT18718 or PT18724 (snugs not furnished).
- PT06784-A Gage Holding Rod is included to accommodate the 715-1 Gaging Head when the Transfer Gage is used with the 717 Electronic Gage. A wire retaining clip keeps electronic gage head cables from deflecting the gage-holding rod.
- 25, 81, 655 and 656 Dial Indicators also can be used on the height gage by means of a PT06784-A Gage Rod (furnished)
- Other useful attachments (extra) are surface gage spindles (57C or 57D, 12" [300m]) and 18" [450mm]) – which are extremely useful for scribing and layout

Height Gage Accessories

NEW!

Straight Scribers for Starrett Height Gages*

All steel scribers are hardened to approximately HRC 62 and have a rounded tip which cuts sharp, clear lines smoothly, with less pressure, on any material.

Straight Scribers for Starrett Height Gages				
Part No.	EDP	Point	Size	Fits Starrett Height Gage No./Size
PT14343	71511	Hardened Tool Steel	1/4 x 1/2 x 3" (6.4 x 12.7 x 75mm)	254 12", 18", 24", 300mm, 450mm, 600mm 254 Metric and English 259 18" and 24"
PT13816	52367		1/4 x 1/2 x 6" (6.4 x 12.7 x 150mm)	
PT13817	52368		1/4 x 1/2 x 10" (6.4 x 12.7 x 250mm)	
PT16566	72288	Hardened Tool Steel	5/8 x 3/8 x 3-5/8"	254 36", 48", 60", 72",900mm
PT13791	71460	Hardened Tool Steel	3/16 x 25/64 x 2-3/4" (4.8 x 10 x 69.9mm)	255 8", 12", 18", 300mm, 450mm
PT22357	12295	Carbide	1/4 x 7/16 x 3" (6.4 x 11.1 x 75mm)	3752

3259-AC Digital Height Gage Scriber Carrier Holder

Scriber carrier for use with 3259 Height Gages to allow attachment of standard quarter inch by half inch tall accessories.

3259-AC

3259-AC Digital Height Gage Scriber Carrier Holder		
Cat. No.	EDP	Description
3259-AC	69859	Digital height gage scriber carrier holder

Stem-Mount Indicator Attachment for Height Gages

This attachment replaces the standard scriber and provides a way to mount dial indicators or LVTD style probes having 3/8" diameter shafts onto your height gage. By using the lower stem of the indicator as an attachment point, the indicator can be used to guarantee the amount of down pressure on the part is the same as the original set zero position.

PT99441

Stem-Mount Indicator Attachment for Height Gages		
Part No.	EDP	Description
PT99441	52991	Stem-mount indicator attachment

Circular Carbide Scribers*

This circular scriber cuts a sharper, cleaner line with less pressure than any other scriber. It resists breakage and chipping but can be rotated for wear.

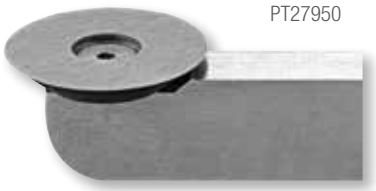

PT27950

Circular Carbide Scribers				
Part No.	EDP	Point	Size	Fits Starrett Height Gage No./Size
PT27724	67185	Circular Carbide	1/4 x 1/2 x 3" (6.4 x 12.7 x 75mm)	254 12", 18", 24", 300mm, 450mm, 600mm 254 Metric and English 259 18", 24"
PT27708	67186		1/4 x 1/2 x 6" (6.4 x 12.7 x 150mm)	
PT27710	67187	Circular Carbide	3/16 x 25/64 x 2-3/4" (4.8 x 10 x 69.9mm)	255 8", 12", 18", 300mm, 450mm
PT27950	67015	Circular Carbide	1/4" (6.4mm) Diameter Shank	2000, 2001 Altissimo
PT28131	67007	Circular Carbide	1/4 x 7/16 x 3" (6.4 x 11.1 x 75mm)	3752, 752

Indicator Attachment

DOVETAIL STYLE

Replaces standard scriber. Provides means to attach dovetail equipped test indicators or electronic probes to height gages. Allows indicator to be used to ensure the down pressure on the part is the same as the original set zero position.

PT99454

Dovetail Style Indicator Attachment		
Part No.	EDP	Description
PT99454	68713	Indicator attachment, dovetail style

*Starrett Originals

PRECISION MAKES THE DIFFERENCE

PURE PRECISION.

Introducing the HDV300 Video-based measurement system. The power of an optical comparator, meets the precision of digital video.

Starrett®

(978) 249-3551 • starrett.com

Follow us!

DEPTH GAGES

Depth Gages

5004 Electronic Depth Gages

0-24"/0-600MM

- Ideal for large part measurement up to 24" (600mm)
- Three movable bridge attachments provide additional large part measurement capacity

5004 Electronic Depth Gages			
Cat. No.	**EDP**	**Range/Size**	**Description**
5004BZ-12/300	14583	0-12" (0-300mm)	Electronic depth gage
5004BZ-16/400	14584	0-16" (0-400mm)	Electronic depth gage
5004BZ-20/500	14585	0-20" (0-500mm)	Electronic depth gage
5004BZ-24/600	14586	0-24" (0-600mm)	Electronic depth gage
5004BZ-32/800	14587	0-32" (0-800mm)	Electronic depth gage
Accessories for 5004 Depth Gages			
Part No.	**EDP**	**Range/Size**	**Description**
PT06133	12825	16" (400mm)	Movable bridge attachment for use with 5004 Depth Gages
PT06134	12826	20" (500mm)	Movable bridge attachment for use with 5004 Depth Gages
PT06135	12827	24" (600mm)	Movable bridge attachment for use with 5004 Depth Gages
PT06136	12828	1.024" (26mm) overall length	Offset attachment for use with 5004 Depth Gages
Smart Cables for 5004 Depth Gages			
Cat. No.	**EDP**	**Description**	
798SCKB	69889	USB cable to PC (In focused window)	
798SCU	73321	SmartCable USB for 798, 5004B	
798SCM	69894	Connect to 7612, 7613 Gage Mux	

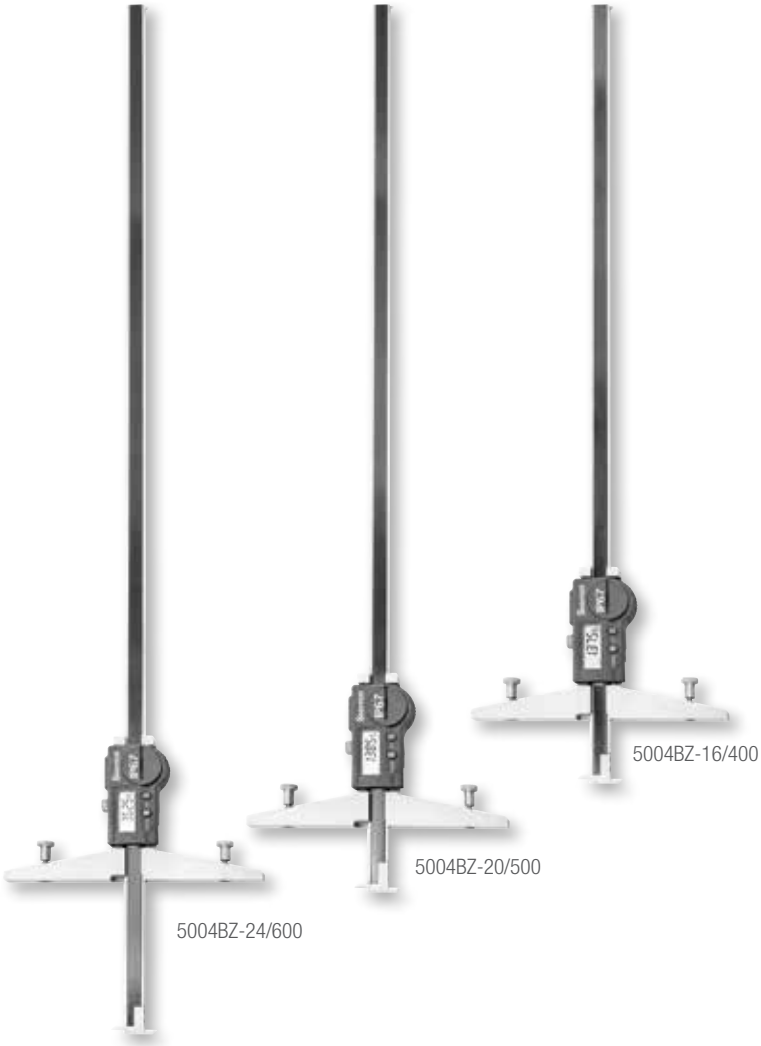

Features and Specifications

- Hardened stainless steel construction
- Coolant resistant
- Mode and Set buttons control a wide range of functions: On/Off, Absolute/Relative display, Inch/Metric display, Preset and Hold
- RS232 data transmission port
- Furnished with one CR2032 lithium battery that will provide over a year of life with normal use
- Protective wooden case
- Resolution: 0.0005"/0.01mm
- Includes offset attachment PT06136
- IP67 protection

5004BZ with PT06133

IP PROTECTION

An IP number is composed of two numbers, the first referring to protection against solid objects and the second against liquids.

First number 6: Totally protected against dust

Second number 7: Protection against submersion in water under standardized conditions of pressure for 30 minutes

Depth Gages

3753A Electronic Depth Gages

0-12"/0-300MM

The 3753 is light and easy to use for depth measurements within its range.

3753 with 180 extension

Readability Features

- Clear, easily-read numbers, properly sized for the tool

Design Features for Accuracy and Long Life

- Linear accuracy: ±.001" (±0.03mm)
- Resolution: .0005" (0.01mm)
- Exclusive Starrett-designed microprocessor chip
- Hardened stainless steel body and slide for long life
- Fine adjustment thumb roll for precision measurements
- Lock to hold the slide in position
- Hardened base is 3-15/16" (99mm) long, but optional base extensions of 7" and 12" (175 and 300mm) are available. Spacing between holes is 2-3/4" (70mm).
- A hook attachment is furnished with the gage, making it possible to take readings from the edge of a workpiece to edges of slots, grooves, shoulders, and other I.D. length dimensioning. The removable hook has the screw permanently attached to prevent loss.
- One-year minimum battery life with furnished 3-volt battery, CR2032

Action Features with Three Control Buttons

- Inch/millimeter conversion
- Zero at any position
- Manual ON/OFF plus a built in automatic OFF after 15 minutes of nonuse

3753 shown with
optional 3648-180 base extension attachment

3753A Electronic Depth Gages		
Cat. No.	**EDP**	**Description**
3753A-6/150	12258	0-6"/150mm Range, Depth Gage in Case
3753A-8/200	12259	0-8"/200mm Range, Depth Gage in Case
3753A-12/300	12260	0-12"/300mm Range, Depth Gage in Case
Accessories for 3753A Electronic Depth Gages		
Cat. No.	**EDP**	**Description**
3648-180	12261	180mm Base Extension
3648-260	12262	260mm Base Extension
3648-320	12263	320mm Base Extension
PT99492	65650	Two 3-Volt Batteries, CR2032

Depth Gages

3753B Electronic Depth Gages

0-12"/0-300MM

The 3753B Electronic Depth Gage is a versatile, easy-to-use tool for measuring depth, slot width, small sections and other applications.

3753B Electronic Depth Gages		
Cat. No.	**EDP**	**Description**
3753B-6/150	12690	0-6"/150mm Range, Depth Gage in Case
3753B-8/200	12692	0-8"/200mm Range, Depth Gage in Case
3753B-12/300	12694	0-12"/300mm Range, Depth Gage in Case
Accessories for 3753B Electronic Depth Gages		
Cat. No.	**EDP**	**Description**
3648-180	12261	180mm Base Extension
3648-260	12262	260mm Base Extension
3648-320	12263	320mm Base Extension
PT63388	72517	Computer Interface Cable to PC (USB)
PT99492	65650	Two 3-Volt Batteries, CR2032
798SCKB	69889	USB cable to PC (In focused window)
798SCU	73321	SmartCable USB for 798, 5004B
798SCM	69894	To 7612 or 7613

Features and Specifications

- Hardened, stainless steel bar for long life
- Removable hook attachment for measurements from the edge of a work piece to the inside or outside edge of slots, grooves, etc.
- Lock to hold the slide in position
- Fine adjustment thumb roll for precision measurements
- Large, easy to read LCD, .310" character height
- IP67 level of protection against coolant, water, dirt and dust
- Induction type linear encoder system
- Patented non-contact RS-232 data output
- CR2032 3-volt battery (>1 year batter life under normal use)
- Inch/mm conversion
- Zero at any position
- Automatic off after 30 minutes of nonuse without loss of position upon reactiviation
- Linear Accuracy: ±.001" (0.03mm)
- Resolution: .0005" (0.010mm)

3753B-6/150

3753B-12/300

IP PROTECTION

An IP number is composed of two numbers, the first referring to protection against solid objects and the second against liquids.

First number 6: Totally protected against dust

Second number 7: Protection against submersion in water under standardized conditions of pressure for 30 minutes

Depth Gages

450, 450M Dial Depth Gages

0-12"/0-300MM

These depth gages are ideal for the individual mechanic. They are light, reliable and accurate for measurements to .001" or 0.02mm and will fit into most toolboxes.

450 Dial Depth Gages (.001" Graduation)			
Cat. No.	**EDP**	**Range**	**Description**
450-6	56766	0-6"	6" Gage without Case
450-12	56768	0-12"	12" Gage without Case
450M Dial Depth Gages (0.02mm Graduation)			
Cat. No.	**EDP**	**Range**	**Description**
450M-300	64276	0-300mm	300mm Gage without Case
Accessories for 450 and 450M Dial Depth Gages			
Cat. No.	**EDP**	**Description**	
PT22287	65861	7"/175mm Base Extension	
PT22288	65862	12"/300mm Base Extension	
450ZZ-6	56776	6" Case Only	
450ZZ-12	56777	12" Case Only	

Readability Features

- Sharp, easy-to-read dial graduations of .001-.100" or 0.02-2mm in one revolution
- Sharp, black graduations on the satin chrome finished bar, every .100" or 1mm

Ease-of-Handling and Versatility Features

- Lock screw for dial bezel
- Lock screw for holding the measuring rod in position
- Optional base extensions of 7" and 12" (175 and 300mm) are available to increase the base span on both models
- Removable hook attachment permits readings from the edge of a workpiece to edges of slots, shoulders, etc.

Accuracy and Long-Life Features

- Hardened, stainless steel base, measuring bar, rack and gears
- Positive split gear anti-backlash control

Left: 6" model
Below: 12"/300mm base extension

Depth Gages

448, 448ME Vernier Depth Gages

0-12"/0-300MM

These are easy-to-use, very accurate depth gages. They are designed for measuring the depths of holes, slots, and recesses and for inspecting jig, fixtures and die work. They are also ideal for measuring from a plane surface to toolmakers' buttons for locating center distances. Readings are in .001" and 0.02mm.

- Heads are hardened, ground and lapped
- Measuring blades are hardened and ground and have accurate and sharp machine divided graduations
- All English graduations read to .001", with the bar being graduated in .025" increments
- All metric graduations read to 0.02mm, with the bar being graduated in 0.5mm increments
- Screw type adjusting nut allows for fine measuring adjustment
- Slide lock nut to hold measurement position
- Vernier plates are adjustable

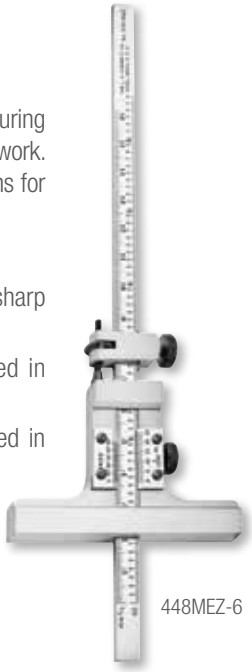

448MEZ-6

Inch Reading/Graduation – .001"				
Cat. No.	**EDP**	**Range**	**Blades Furnished**	**Base Length x Width**
448Z-6	52306	0-6"	One (6")	
448Z-12	52308	0-12"	One (12")	2-3/4 x 1/4"
448Z-612	52310	0-12"	Two (6" and 12")	
Inch and Millimeter Reading/Graduation – .001" and 0.02mm – Both Edges				
Cat. No.	**EDP**	**Range**	**Blades Furnished**	**Base Length x Width**
448MEZ-6	52312	0-6" (150mm)	One (6"/150mm)	
448MEZ-12	52314	0-12" (300mm)	One (12"/300mm)	2-3/4 x 1/4" (70 x 6.35mm)
448MEZ-612	52316	0-12" (300mm)	Two (6"/150mm and 12"/300mm)	

237, 237M Steel Rule Depth Gages

0-6"/0-150MM

These very handy depth gages can be used to quickly obtain measurements in 64th of an inch or 1/2mm by simply adjusting the rule to the required depth.

- The gage consists of a nicely finished, hardened steel head and an accurate, machine divided, tempered steel rule. These rules are either our 610N (6") or our 635N (150mm) models.
- Gage can be smoothly adjusted to the required measurement and then locked into position by a knurled nut
- Base is cut out on one side, adjacent to the rule, permitting easier readings and more accurate measurements
- 6" hook rule (236HC, EDP 51077) also available, permitting easier readings from the edge of a workpiece to the edges of slots, shoulders, etc. Graduated in 32nds, 64ths.

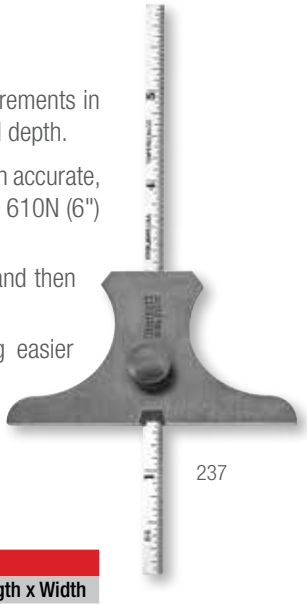

237

237 Steel Rule Depth Gages (0-6" Range)			
Cat. No.	**EDP**	**Graduation**	**Head Length x Width**
237	51080	32nds, 64ths	2-5/8 x 1/8"
237M Steel Rule Depth Gages (0-150mm Range)			
Cat. No.	**EDP**	**Graduation**	**Head Length x Width**
237M	51081	mm, 1/2mm	66 x 3mm

Depth Gages

236, 236H Combination Steel Rule Depth and Angle Gages

0-6"

236

This depth gage has an added feature permitting its use as a protractor for measuring angles. It is a simple, handy tool that is a welcome addition to any machinist's toolbox.

- The head is graduated both left and right to 30, 45, and 60 degrees. The rule can be set to any of these angles by swinging the rule until the line on the turret coincides with the desired angle.
- Head is made of hardened steel, ground, and nicely polished – 2-5/8" (66mm) long and 1/8" (3mm) wide
- One side of the base is cut out to permit easier and more accurate readings
- The center of the head is recessed so that the tool will lay flat to permit more accurate measurements
- Tempered rule has been accurately machined divided, is smoothly fitted to the head, and can be locked in position by a knurled nut.

236H

These versatile gages can be used for calipering, as a depth gage by simply reversing the rule, as a protractor, and as a hook rule when removed from the tool.

Features are the same as the 236 except that a hook rule and an extra 6" (150mm) long rod are furnished with this gage. The rod has a 5/64" (2mm) diameter so it can measure the depth of small holes, slots, and recesses that the rule will not enter.

236 and 236H Combination Steel Rule Depth and Angle Gages (0-6" Range)

Cat. No.	EDP	Graduation	Angle Degrees	Description
236	51074			6" Combination Gage
236HA	51075	32nds, 64ths	30, 45, 60	6" Combination Gage with Hook Rule
236HB	51076			6" Combination Gage with Hook Rule and Rod
236HC	51077	32nds, 64ths	None	6" Hook Rule Only*
236HD	51078	None	None	6" Rod Only

Also available on request with C610N-6 satin chrome rule.
* Hook rule only for 236, 236H, 237, 493 and 493B.

Above: 236HB (with hook rule and rod)
Left: 236

Depth Gages

Dial Depth Gages

These depth gages are direct reading tools, referencing from their hardened and ground bases. All bases are 2-1/2" (64mm) long. They are quicker and more convenient to use than any other type of depth gage within their ranges and accuracy. Electronic Indicators can be furnished by special order.

640, 640M Dial Depth Gages

0-1/2"/0-10MM

640 Dial Depth Gages

The contact is slightly up into the base at rest. In action, the inspector sets the contact at zero, which is usually at the bottom of the base. Then the top button is pushed down to contact the work and the measurement is taken.

640

640R Dial Depth Gages

These gages are the same as the 640 except they have reverse movement (no push button) and can easily be used with one hand. Simply set on zero and apply the contact to the work and read the measurement.

640 Dial Depth Gages				
In Case Cat. No.	EDP	Range	Graduation	Dial Reading
640JZ 640RJZ	52705 52709	0-1/2"	.0005"	0-50
640MJZ 640MRJZ	55997 56001	0-10mm	0.01mm	0-100

643 Dial Depth Gage

0-.125"

This gage has a knife-edge base and a needle point contact which has been hardened and ground. The knife-edge base has a cutout so the conical point can be precisely positioned for close work. Point is 1/2" (12.7mm) long with a 40º included angle.

In action, the inspector gently pushes against a surface plate or other calibrated surface. If needed, rotate the bezel dial's zero indication with the needle. Zero is then set and can be locked via the locking screw.

643

643 Dial Depth Gages						
In Case Cat. No.	EDP	Without Case Cat. No.	EDP	Range	Graduation	Dial Reading
643JZ	52714	643J	52715	0-.125"	.0005"	0-25-0

Electronic version available from Special Order Division.

Depth Gages

644, 644M Dial Depth Gages

0-3"/0-75MM

These gages are for longer ranges, and are accurate and simple to use. Put the contact on the work to be measured and push the gage head down until the base stops at the reference point and take your reading.

Furnished with three rounded-end contact points to cover the range. Flat end contact points are also available on special order.

The zero setting can be checked with the shortest contact in place by pushing down on a flat surface.

644J

644 Dial Depth Gages						
In Case		Without Case				
Cat. No.	EDP	Cat. No.	EDP	Range	Graduation	Dial Reading
644JZ	52718	644J	52719	0-3"	.001"	0-100
644MJZ	56027	644MJ	56028	0-75mm	0.01mm	0-100

648 Depth Gage Bases

Depth gage base with 25SC38 Stem Collet to fit 3/8" (9.5mm) stem dia. (as per AGD). Split bushings for adapting stem diameter are available but not included.

648-4

648 Depth Gage Bases		
Cat. No.	EDP	Base Size
648-4	65850	4" (100mm)
648-6	65851	6" (150mm)
648-8	65852	8" (200mm)

648 Depth Gage Bases will also accommodate the 644 Dial Depth Gage.

Depth Gages

642, 642M Top Reading Dial Depth Gages

0-8.6"/0-215MM

This dial depth gage uses the back-plunger indicator to provide an upward-facing dial for easier readout. The operator selects the extension and contact point required, zeros the tool on a master and then reads any deviation of the work directly on the dial.

- Indicator does not have to be repositioned to get the full range available
- Choice of 2-1/2" (60mm) or 4" (100mm) base
- Two contacts and five extensions extend the range to 8.6" or 215mm
- Charts are supplied showing combinations of contacts and extensions required to achieve certain lengths

Above: 642AZ side view
Below: top view

642 Top Reading Dial Depth Gages*

Cat. No.	EDP	Range	Graduation	Dial Indicator Range	Approx. Base Length
642Z	65103	0-8.6"	.001"	.200"	2-1/2"
642AZ	65104				4"
642MZ	65105	0-215mm	0.01mm	5mm	60mm
642MAZ	65106				100mm

*With maximum extension added and contact options

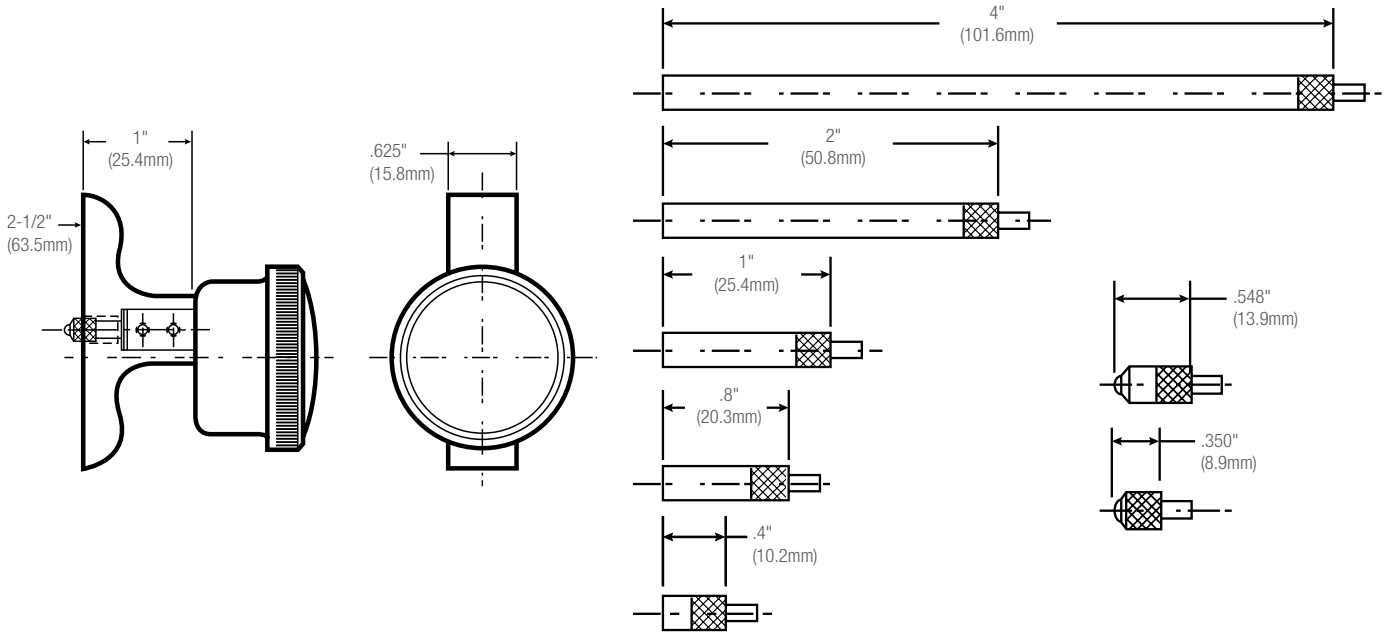

DIAL AND ELECTRONIC INDICATORS AND GAGES

Test Indicator Snugs and Split Bushings Usage Guide

Dove Tail Style Snugs:

PT22428: 3/32-1/4" (2.4-6.3mm) inch hole on one side and standard female dove connection on the other. For use with 708, 709 and 811 Test Indicators. Allows connection to 657AA, 657A, 657T Magnetic Base and PT017762 Holding Rod for 252 Height Stand and PT11770A Tool Post Holder or 711-49 Height Gage Attachment.

Round Connection Sungs:

657S: 1/4" hole on both ends

PT18718: 3/32-1/4" hole on one end 5/16" on the other

PT18724: 3/32-1/4" hole on one end 3/8" on the other

657H: 3/8" inch hole on both ends

665D: 3/8" inch hole on one end .465" (11.8mm) on the other. Includes 665L (.375" bushing)

PT16846 (not shown): 3/4" inch hole on both ends

Universal Style Snugs:

58S: 3/32-1/4" hole allows connection to 1/4", 5/16", 3/8" (6.3, 8, 9.5mm)

Universal Drum Style Snugs:

57S: 5/16" and 3/8" (8, 9.5mm) on one end and 9/64", 5/32", 3/16", 1/4" (3.5, 4, 4.8, 6.3mm) on the opposite

NOTE: 3/8-1/4" bushings can be used with some of the snugs above to change 3/8"-1/4" where required (see PT00764)

Split Bushings:

657R: outside .312" (7.9mm), inside .250" (6.3mm), length 1.000" (25.4mm)

PT00764: .375" (9.5mm) outside, inside .250" (6.3mm), length 1/2" (12.7mm)

80SB: outside .375" (9.5mm), inside .219" (5.5mm), length 1/2" (12.7mm). Used to increase the stem diameter on Starrett 80 miniature indicators to standard .375" diameter.

25MSB: outside .375" (9.5mm), inside .316" (8mm), length 1/2" (12.7mm), converts metric stemmed indicator to standard 3/8" diameter

665L: outside .465 (11.8mm), inside .375" (9.5mm), length 1-1/4" (31.5mm)

25SB: outside .500" (12.7mm), inside .375" (9.5mm), length 1/2" (12.7mm)

657H

PT22428

58S

657R

PT16846

665D

657S
PT18718
PT18724

57S

665L

Best Practices for Test Indicators and Holders

Test indicators are primarily used for testing or checking parts and for machine setups. They are a tool that is indispensable for working as a machinist or toolmaker. They are available in two types – plunger style and the lever style. Both are versatile, but the lever style can be more adaptable to smaller, confined working areas.

Unlike other indicators, the lever style's contact moves in an arc rather than in a straight line. This can cause a slight inaccuracy called "cosine error" if the angle of the lever to the workpiece is too steep. If, for example, a lever was set off an additional 20º, there could be an error of .0006" in a .010" range (0.012 mm in a 0.2mm range).

It is good practice, therefore, to keep your contact at or near 90º to the direction of movement.

Test indicators should always be "loaded" 1/10 to 1/4 of a turn before measuring.

Test indicators are comparative instruments that check and compare to known standards or that are used to zero-out setups.

We have a broad selection of holders shown in this section that allow you to use these indicators to the fullest. We've never seen a job that one of these holders combined with one of our test indicators could not handle.

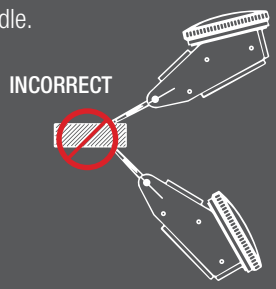

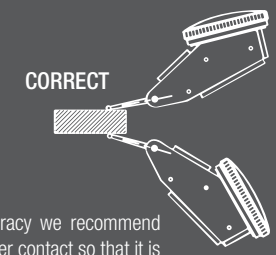

For extreme accuracy we recommend positioning the lever contact so that it is approximately 15º (708/709) or 0º (all other lever styles) from being horizontal with the workpiece

Test Indicators

708, 708M, 709, 709M Dial Test Indicators with Dovetail Mounts

.020", .060"/0.2MM, 0.8MM

These precision test indicators offer an easy to read angled head and the flexibility of three dovetail mounts. Features include:

- Large 1-3/8" (35mm) dial diameter with angled head
- Precision gear-driven design with smooth, jeweled movement
- Replaceable contact point reverses automatically, always maintaining clockwise hand rotation
- Satin chrome finish for durability
- Contacts are frictionally adjustable and replaceable
- Revolution count hand on 708B and 709B models
- Meet or exceed ISO accuracy specification

708BZ R708AZ

709BCZ

Individual Carbide Contact Points‡

Part No.	EDP	Length in	Length mm	Ball Diameter in	Ball Diameter mm	Fits Models
PT23942	65255			.040	1	
PT23914†	64222	13/16	20	.078	2	.0001", .0005", 0.01mm Reading Models
PT23943	65256			.120	3	
PT27024†	66239	1-23/64	34.4	.078	2	.0001", .0005", 0.01mm Reading Models
PT25577†	67294	1-5/64	28.4	.078	2	.0001", .0005", 0.01mm Reading Models
PT23953†	65868	5/8	16	.078	2	0.002mm Reading Models Only

† PT23914, PT27024, PT25577 and PT23953 furnished as standard.
‡ Length of carbide contacts must be the same as contacts normally furnished.

708, 709 Dial Test Indicators with Dovetail Mounts

Cat. No.	EDP	With SLC** Cat. No.	With SLC** EDP	Grad.	Range	Dial Reading	Carbide Contact Point Length	Carbide Contact Point Ball Dia.	Dial Color	Description
708AZ	64212	708AZ W/SLC	66866	.0001"	.010"	0-5-0	13/16" (20mm)	.078" (2mm)	White	Without attachments
R708AZ	64603	R708AZ W/SLC	66867						Red	
B708AZ	64607	B708AZ W/SLC	66868						Black	
708ACZ	64217	708ACZ W/SLC	66869						White	With attachments*
R708ACZ	64604	R708ACZ W/SLC	66870						Red	
B708ACZ	64608	B708ACZ W/SLC	66871						Black	
708BZ	64213	708BZ W/SLC	66874	.0001"	.020"	0-5-0	13/16" (20mm)	.078" (2mm)	White	Without attachments
708BCZ	64218	708BCZ W/SLC	66875							With attachments*
709AZ	64214			.0005"	.030"	0-15-0	13/16" (20mm)	.078" (2mm)	White	Without attachments
R709AZ	64605								Red	
B709AZ	64609								Black	
709ACZ	64219								White	With attachments*
R709ACZ	64606								Red	
B709ACZ	64610								Black	
709ALZ	65857			.0005"	.050"	0-25-0	1-23/64" (34.4mm)	.078" (2mm)	White	Without attachments
709ALCZ	65858									With attachments*
709BZ	64215			.0005"	.060"	0-15-0	13/16" (20mm)	.078" (2mm)	White	Without attachments
709BCZ	64220									With attachments*

708M, 709M Dial Test Indicators with Dovetail Mounts

Cat. No.	EDP	With SLC** Cat. No.	With SLC** EDP	Grad	Range	Dial Reading	Carbide Contact Point Length	Carbide Contact Point Ball Dia.	Dial Color	Description
708MAZ	65864	708MAZ W/SLC	66872	0.002mm	0.2mm	0-100-0	5/8" (16mm)	.078" (2mm)	Yellow	Without attachments
708MACZ	65865	708MACZ W/SLC	66873							With attachments*
709MAZ	64216			0.01mm	0.8mm	0-40-0	13/16" (20mm)	.078" (2mm)	Yellow	Without attachments
709MACZ	64221									With attachments*
709MALZ	67092			0.01mm	1.0mm	0-50-0	1-5/64" (28.4mm)	.078" (2mm)	Yellow	Without attachments
709MALCZ	67093									With attachments*

*Attachments include dovetail body clamp (PT22429/EDP 72441), tool post holder (PT11770A/EDP 71361), swivel post snug with dovetail indicator clamp (PT22428/EDP 72440), and snug and rod unit (Inch: PT22430/EDP 72442 or Millimeter: PT27171/EDP 66457).
** Includes redemption card for Standard Letter of Certification

Test Indicators

811, 811M Dial Test Indicators with Swivel Head

.060", 0.8MM

These are some of the most versatile and unique indicators available, the swivel head feature allows positioning to suit your line of sight from horizontal to vertical and at any angle up to 90º.

- Two positioning mounts work with dovetail test indicator accessories
- Contacts are frictionally adjustable and replaceable
- Contact point reverses, always maintaining clockwise hand rotation
- Contacts also available individually in steel, carbide, and different sizes
- Smooth, jeweled movement
- Large, 1-3/8" (35mm) dial diameter for increased readability
- Inch reading indicators are available with white, red, or black dials – metric indicators with yellow dials

811-5PZ R811-1PZ B811-5PZ

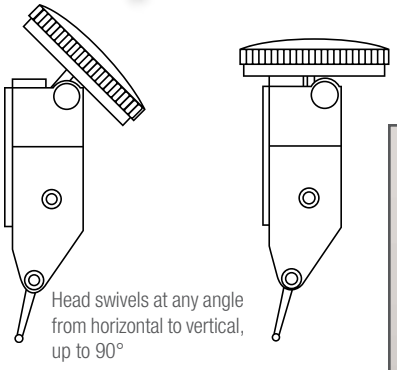

Head swivels at any angle from horizontal to vertical, up to 90°

Individual Contact Points for 811 and 811M Dial Test Indicators with Swivel Head

Part No.	EDP	Length in	Length mm	Ball Diameter in	Ball Diameter mm	Material	Fits 811 Models
PT23062 PT23062X	72451 72452	5/8	16	.032	0.8	Steel Carbide	.0005" and 0.01mm reading only
PT22315 PT22315X	72443 72453	5/8	16	.078	2	Steel Carbide	.0005" and 0.01mm reading only
PT23064 PT23064X	72454 72455	1-5/16	33	.032	0.8	Steel Carbide	.001" reading only
PT23011 PT23011X	72444 72456	1-5/16	33	.078	2	Steel Carbide	.001" reading only

811, Dial Test Indicators with Swivel Head

Cat. No.	EDP	Grad.	Range	Dial Reading	Steel Contact Points Length	Steel Contact Points Ball Diameter	Dial Color	Description
811-5PZ B811-5PZ R811-5PZ	57080 63262 63266	.0005"	.030"	0-15-0	5/8" (16mm)	.078" (2mm)	White Black Red	In case without attachments
811-5CZ B811-5CZ R811-5CZ	57079 63261 63265	.0005"	.030"	0-15-0	5/8" (16mm)	.078" (2mm)	White Black Red	In case with attachments*
811-1PZ B811-1PZ R811-1PZ	57082 63264 63268	.001"	.060"	0-30-0	1-5/16" (33mm)	.078" (2mm)	White Black Red	In case without attachments
811-1CZ B811-1CZ R811-1CZ	57081 63263 63267	.001"	.060"	0-30-0	1-5/16" (33mm)	.078" (2mm)	White Black Red	In case with attachments*

811M Dial Test Indicators with swivel head

Cat. No.	EDP	Grad.	Range	Dial Reading	Steel Contact Points Length	Steel Contact Points Ball Diameter	Dial Color	Description
811-MPZ 811-MCZ	57084 57083	0.01mm	0.8mm	0-40-0	5/8" (16mm)	.078" (2mm)	Yellow	In case without attachments In case with attachments*

*Attachments include dovetail body clamp (PT22429/EDP 72441), tool post holder (PT11770A/EDP 71361), swivel post snug with dovetail indicator clamp (PT22428/EDP 72440), and snug and rod unit (Inch: PT22430/EDP 72442 or Millimeter: PT27171/EDP 66457).

Test Indicators

Attachments for 708, 709, and 811 Test Indicators

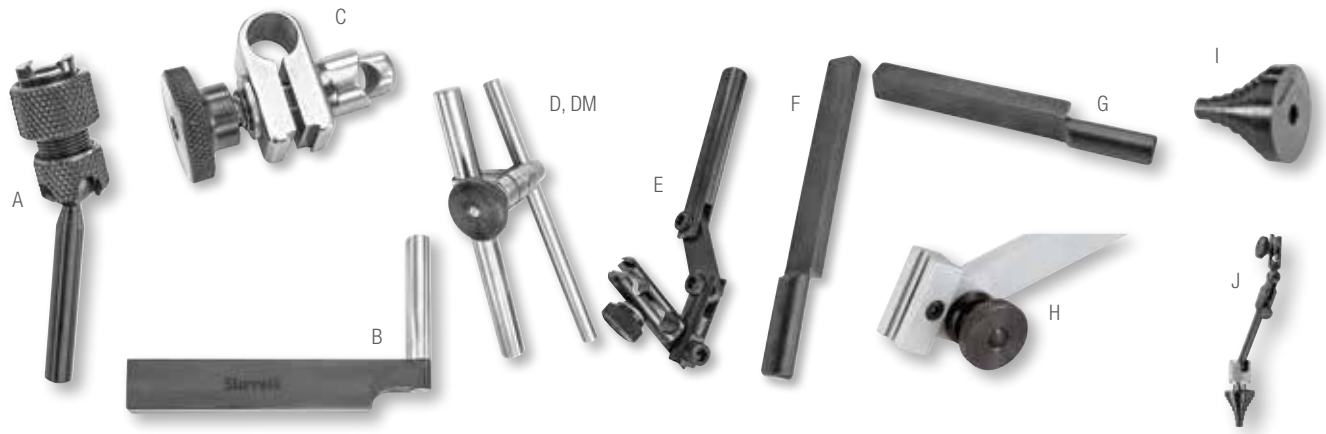

A. Dovetail Body Clamp

PT22429. 3/16" (4.8mm) diameter rod. For use in chucks, collets or surface gage snugs.

B. Tool Post Holder

PT11770A. 1/4" x 1 5/16" (6.3 x 33mm) post and 1/4" x 1/2" (6.3 x 12.7mm) shank. For use in tool posts or in height gages.

C. Swivel Post Snug with Dovetail Indicator Clamp

PT22428. Will fit over spindles and posts 3/32-1/4" (2.4-6.3mm). Can be used directly on our 252 Height Transfer Gage and our 657 Magnetic Base Holders. It is frequently used on the 1/4" (6.3mm) rod of the Snug and Rod Unit PT22430.

D. Snug and Rod Unit

PT22430. This unit consists of a snug (PT18724) with two 4" (100mm) long rods, one a 1/4" (6.3mm) diameter, the other a 3/8" (9.5mm) diameter. It is generally used with an indicator attached to PT22428 Swivel Post Snug which slides onto the 1/4" (6.3mm) diameter rod.

The 3/8" (9.5mm) rod will fit into the 252 and 657H Gage Holders. It also has the ability to be held in chucks and adjusted to a wide range of heights and diameters.

DM. Metric Snug and Rod Unit

PT27171. This unit consists of a snug with two 100mm (4") long rods, one having a 6mm (.236") diameter, the other an 8mm (.315") diameter.

E. Indicator Axial Support

PT26007. This triple-hinged indicator holder is designed to mount dovetail indicators (such as our 708, 709, and 811 Indicators). By using a rod through the 3/16" (4.7mm) mounting hole, it will also accommodate test indicators such as our 711 Indicator. Overall length is approximately 5-1/4" (133mm), shank size is 3/8" (9.5mm).

F. Height Gage Attachment

711-49. 1/8" x 5/16" (3 x 8mm) shank. This is used for 250, 750, 751 Height Gages, and 995 Planer and Shaper Gage.

G. Height Gage Attachment

711-35. 3/16" x 3/8" (4.8 x 9.5mm) shank. This is used for 255 Height Gage.

H. Indicator Attachment

PT99454 dovetail clamping style. Replaces standard scriber. Provides means to attach dovetail equipped test indicators or electronic probes to height gages. Allows indicator to be used to ensure that the down pressure on the part is the same as the original set zero position.

I. and J. Collet Adapters

PT28315 (I.)– To be used with a 3/16" (4.7mm) diameter attachment for indicators such as PT22429 dovetail body clamp and PT07104F long and short arm attachments. PT28316 (J.)– Swivel Post Collet Adapter, for use on any dovetail test indicator.

Attachments for 708, 709, and 811 Test Indicators

Photo Key	Part No.	EDP	Description
A*	PT22429	72441	Dovetail Body Clamp
B*	PT11770A	71361	Tool Post Holder
C*	PT22428	72440	Swivel Post Snug with Clamp
D*	PT22430	72442	Snug and Rod Unit
DM	PT27171	66457	Metric Snug and Rod Unit
E	PT26007	65101	Indicator Axial Support
F	711-49	52941	Height Gage Attachment
G	711-35	52942	
H	PT99454	68713	Indicator Attachment, dovetail style
I	PT28315	68847	Collet Adapter
J	PT28316	68848	

* Furnished with all sets having "C" in the catalog number

Test Indicators

711, 711M Last Word® Dial Test Indicators

.030", 0.7MM

The venerable Last Word Dial Test Indicator is among the most versatile available. Their small size and variety of attachments will handle all jobs with ease and accuracy. A very useful feature is the shaded dial – when used with a mirror, such as in a jig bore application, the operator will always know what the correct reading is.

Individual Contact Points (Fit All 711 Models)

Part No.	EDP	Length in	Length mm	Ball Diameter in	Ball Diameter mm	Material
PT07137	70945	5/32	4	.035	0.9	Steel
PT07136	70944			.062	1.6	
PT07087	70912			.120	3	
PT07137X	52964	5/32	4	.035	0.9	Carbide
PT07136X	52965			.062	1.6	
PT07087X	52966			.120	3	

Other features include:

- Ideal for precise measurements in all machining, layout, and inspection work
- Smooth, jeweled lever action
- Positive reversing switch
- Hard chrome-plated ratchet contact point
- Swiveling tubular body
- Easy reading dials, half yellow for clarity
- Variety of attachments available to suit the application.
- Indicators having "C" in the catalog number are furnished with 3 interchangeable steel contact points. All other indicators are furnished with one interchangeable steel contact point, PT07087. Carbide points available as listed.

711 Last Word® Dial Test Indicators

Cat. No.	EDP	Grad.	Range	Dial Reading	Steel Contact Points Length	Steel Contact Points Ball Diameter	Description
711FSAZ	52925	.001"	.030"	0-15-0	5/32" (4mm)	One: .120" (3mm)	Indicator with universal shank complete with long and short arm, body clamp
711FSBZ	52927						Indicator with gooseneck shank
711FSZ	52929						Indicator with body clamp only
711GPSZ	52944						Indicator with universal friction holder with shank
711GCSZ	52943	.001"	.030"	0-15-0	5/32" (4mm)	Three: .035" (0.9mm) .062" (1.6mm) .120" (3mm)	Indicator complete with all attachments*
711HSAZ	52951	.0005"	.030"	0-15-0	5/32" (4mm)	One: .120" (3mm)	Indicator with universal shank complete with long and short arm, body clamp
711HSZ	52953						Indicator with body clamp only
711LPSZ	52958						Indicator with universal friction holder with shank
711LCSZ	52957	.0005"	.030"	0-15-0	5/32" (4mm)	Three: .035" (0.9mm) .062" (1.6mm) .120" (3mm)	Indicator complete with all attachments*

711M Last Word® Dial Test Indicators

Cat. No.	EDP	Grad.	Range	Dial Reading	Steel Contact Points Length	Steel Contact Points Ball Diameter	Description
711MFSAZ	52926	0.01mm	0.7mm	0-35-0	5/32" (4mm)	One: .120" (3mm)	Indicator with universal shank complete with long and short arm, body clamp
711MFSZ	52930						Indicator with body clamp only
711MGPSZ	52946						Indicator with universal friction holder with shank
711MGCSZ	52945	0.01mm	0.7mm	0-35-0	5/32" (4mm)	Three: .035" (0.9mm) .062" (1.6mm) .120" (3mm)	Indicator complete with all attachments*

*Attachments include 3 contact points – body clamp – universal friction holder with shank – universal shank complete with long and short arm – double-jointed attachment – height gage attachment – surface gage attachment – coupling with 3/16" (4.8mm) hole.

711LPSZ Indicator with Universal Friction Holder and Shank

711FS-GS

Test Indicators

Attachments for 711 Last Word® Dial Test Indicators

A. Body Clamp

PT07101F Permits the indicator to be held by its body and clamped to any diameter rod from 1/8-1/4" (3-6mm). It also attaches the universal shank to the indicator with the addition of PT07104F Long and Short Arm.

B. Universal Friction Holder

with shank 711EA – This inserts in place of the end plug at the top of the indicator body. The shank has a 3/16" (4.8mm) diameter which will fit into chucks and also into the snugs of our 57 and 257 Surface Gages.

C. Universal Shank

PT07103A. This shank includes PT07104F (the long and short arm) to go into the body clamp. With its shank size of 1/4" x 1/2" (6.4 x 12.7mm), this can be used in a lathe tool post or for 254 Height Gage.

D. Gooseneck Shank

PT07107A. 1/4" x 1/2" (6.4 x 12.7mm) shank can be used on tool posts and on the same height gages as the PT07103A Universal Shank. It is attached by unscrewing the body clamp and replacing it with the gooseneck shank.

E. Double-Jointed Attachment

PT13301. This attachment has a 3/8" (9.5mm) diameter at one end and a 1/4" (6.3mm) diameter at the other end and will fit into chucks and collets, (such as in a jig borer) and hold the indicator by the body clamp, giving it greater depth and diameter range.

F. Long and Short Arm

PT07104F. This is used with the universal shank to attach it to the body clamp. It has a 3/16" (4.8mm) diameter and arms with 13/16" and 1-3/16" (20mm and 30mm) lengths.

G. Coupling with 3/16" (4.8mm) hole

PT05116. Coupling slips over the long and short arm PT07104F and the shank of 711EA Universal Friction Holder to permit offset.

H. Height Gage Attachment

PT24706 – This inserts in place of the end plug at the top of the indicator body. The 3/16" x 11/32" (4.8 x 8.7mm) shank fits 255 12", 18" and 24" Height Gages.

I. Height Gage Attachment

711-49. 1/8" x 5/16" (3 x 8mm) shank. This is used for 250, 750, 751 Height Gages and 995 Planer and Shaper Gage.

J. Height Gage Attachment

711-35. 3/16" x 3/8" (4.8 x 9.5mm) shank. This is used for 255 Height Gage.

K. Indicator Axial Support

PT26007. This triple-hinged indicator holder is designed to mount dovetail indicators (such as our 708, 709, and 811 indicators). By using a rod through the 3/16" (4.7mm) mounting hole, it will also accommodate test indicators such as our 711 indicators. Overall length is approximately 5 1/4" (133mm), shank size is 3/8" (9.5mm).

L. Surface Gage Attachment

PT05119. Fits in place of the ball shank of the 711EA Attachment. Allows 711G and L Indicators to be used on holders with smaller clamp hole.

M. Tool Post Holder

PT11770A. 1/4" x 1 5/16" (6.3 x 33mm) post and 1/4" x 1/2" (6.3 x 12.7mm) shank. For use in tool posts or in height gages

N. Rubber Dust Guard

PT09764. Protects the indicators' working parts by sealing out dust, powder, and other foreign matter under adverse gaging conditions.

O. Collet Adapter

PT28315. To be used with a 3/16" (4.7mm) diameter attachment for indicators such as PT22429 dovetail body clamp and PT07104F long and short arm attachments.

Attachments for 711 Last Word Dial Test Indicators

Photo Key	Part No.	EDP	Description
A*	PT07101F	70924	Body Clamp
B*	711EA	52924	Universal Friction Holder with Shank
C*	PT07103A	52939	Universal Shank Complete with Long and Short Arm
D	PT07107A	52937	Gooseneck Shank
E*	PT13301	71441	Double-Jointed Attachment
F*	PT07104F	70929	Long and Short Arm
G*	PT05116	70556	Coupling with 3/16" (4.8mm) Hole
H*	PT24706	65064	Height Gage Attachment
I	711-49	52941	
J	711-35	52942	
K	PT26007	65101	Indicator Axial Support
L*	PT05119	70557	Surface Gage Attachment
M	PT11770A	71361	Tool Post Holder
N	PT09764	71290	Rubber Dust Guard
O	PT28315	68847	Collet Adapter

*Furnished with all sets having "C" in the catalog number

Test Indicators

3808, 3809, 3908 and 3909 Dial Test Indicators

These dial test indicators are offered with choices of dial size, range and include accessories.

All 3808 and 3809 models have 1-1/4" (32mm) dial faces while 3908 and 3909 models offer a larger 1-9/16" (40mm) dial face.

Each inch reading and metric reading 3808, 3809, 3908 and 3909 is offered with a choice of two Graduation/Range/Reading configurations. Features include:

- Precision gear-driven design with smooth, jeweled movement
- Frictionally adjustable contact point reverses automatically, always maintaining clockwise hand rotation
- Meets or exceeds ANSI/ASME accuracy specifications
- High contrast, easy-to-read dials with white background for inch and yellow for metric

3808, 3809, 3908 and 3909 Inch Reading Indicators

Cat. No.	EDP	Grad.	Range	Dial Reading	Dial Diameter	Description
3808A	12331	.0001"	.008"	0-4-0	1-1/4"	Indicator, two dovetail clamps, case*
3808AC	12303					Indicator with accessories, case**
3908A	12488	.0001"	.008"	0-4-0	1-9/16"	Indicator, two dovetail clamps, case*
3908AC	12636					Indicator with accessories, case**
3809A	12333	.0005"	.030"	0-15-0	1-1/4"	Indicator, two dovetail clamps, case*
3809AC	12305					Indicator with accessories, case**
3909A	12527	.0005"	.030"	0-15-0	1-9/16"	Indicator, two dovetail clamps, case*
3909AC	12669					Indicator with accessories, case**

*Indicator, .078" contact point, 3/8" and 5/32" dovetail clamps and case
**Indicator, .078" contact point, 3/8" and 5/32" dovetail clamps, .156" swivel post holder, tool post holder, contact wrench and case

3909A

3808, 3809, 3908 and 3909 Metric Reading Indicators

Cat. No.	EDP	Grad.	Range	Dial Reading	Dial Diameter	Description
3808MA	12332	0.002mm	0.2mm	0-100-0	32mm	Indicator, two dovetail clamps, case*
3808MAC	12304					Indicator with accessories, case**
3908MA	12520	0.002mm	0.2mm	0-100-0	40mm	Indicator, two dovetail clamps, case*
3908MAC	12656					Indicator with accessories, case**
3809MA	12334	0.01mm	0.8mm	0-40-0	32mm	Indicator, two dovetail clamps, case*
3809MAC	12307					Indicator with accessories, case**
3909MA	12563	0.01mm	0.8mm	0-40-0	40mm	Indicator, two dovetail clamps, case*
3909MAC	12673					Indicator with accessories, case**

*Indicator, 2mm contact point, 9.5mm and 4mm dovetail clamps and case
**Indicator, 2mm and 4mm contact points, 9.5mm and 4mm dovetail clamps, 4mm swivel post holder, tool post holder, contact wrench and case

3909MA

Back Plunger Indicators

650, 651 Back-Plunger Dial Indicators

.200"

These workhorse back plunger indicators feature AGD (American Gage Design) stem holding fixtures and the great variety of AGD contact points. These very versatile indicators have the following features:

- 650 Indicators have a 3" (75mm) deep hole attachment that connects directly with the main spindle for positive action. Attachment is convenient to use when checking internal dimensions of a workpiece. When not needed, the attachment can be easily removed and the hole capped.
- 651 Indicators are identical to the 650 indicators except they cannot accept the deep hole attachment
- Both models have large 1-11/16" (43mm) diameter bezels with easy-to-read dial numbers and graduations
- Smooth and accurate operation due to their sturdy, basic design
- Hardened, stainless steel AGD stem .375" (9.5mm) diameter
- Shank dimension 1/4" (6.3mm) diameter, 3-3/16" (80mm) long
- With their .375" (9.5mm) AGD stem diameter, the 650 and 651 can be used with our 670 Hole Attachment and our 671 Universal Attachment
- Adjustable dials to set zero at any point opposite the hand
- Inch reading dials have white faces and millimeter reading dials are yellow
- Three different styles of contact points are furnished with each indicator

650, 651 Back Plunger Dial Indicators							
With Deep Hole Attachment		Without Deep Hole Attachment					
Cat. No.	EDP	Cat. No.	EDP	Grad.	Range	Dial Reading	Description
650A1Z	64475	651A1Z	64483	.001"	.200"	0-100	Indicator with 3 contact points, 3 attachments*, in case
650B1	64477	651B1	64485				Indicator with 3 contact points only
650A5Z	64474	651A5Z	64484	.001"	.200"	0-50-0	Indicator with 3 contact points, 3 attachments*, in case
650B5	64476	651B5	64486				Indicator with 3 contact points only
650, 651 Back Plunger Dial Indicators							
With Deep Hole Attachment		Without Deep Hole Attachment		Grad.	Range	Dial Reading	Description
Cat. No.	EDP	Cat. No.	EDP				
650MA1Z	65261	651MA1Z	65263	5mm	0.01mm	0-100	Indicator with 3 contact points, 3 attachments*, in case
650MB1	65262	651MB1	65264			Yellow Dial Face	Indicator with 3 contact points only

* Attachments include clamp, tool post holder and snug (PT18718).

Individual Contact Points Only		
Photo	Part No.	EDP
	PT01761	75263
	PT06632-5	70793
	PT06632-6	70794

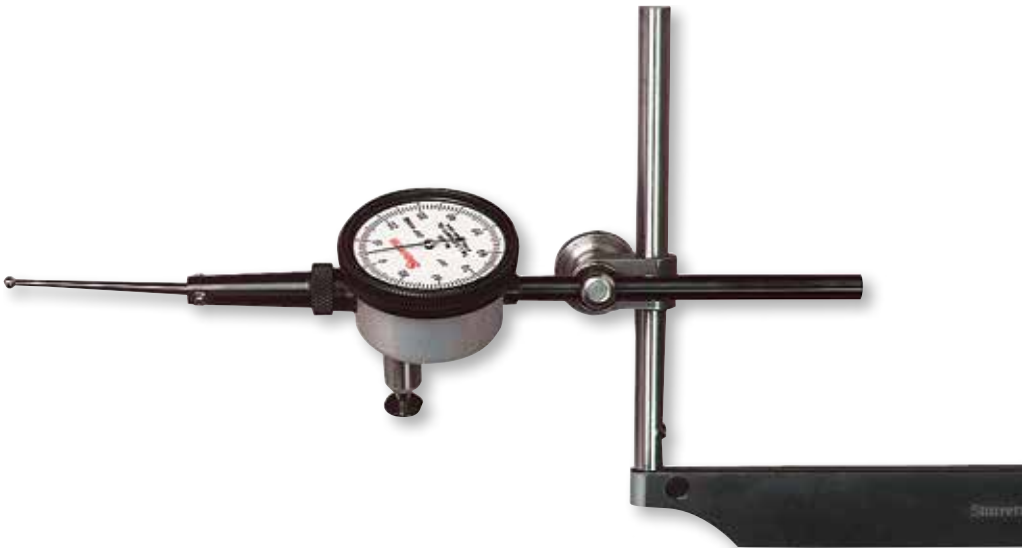

Back Plunger Indicators

196, 196M Universal Back Plunger Dial Indicators

.200", 5MM

Our 196 Indicator is one of the most versatile indicators available … and it is the "granddaddy" of them all. Over the years this tool has been improved by methods and materials, but the basic design is unchanged. The design has withstood the test of time and beaten all challengers because it is:

- Accurate and reliable
- Simple to operate
- Rugged, with few moving parts
- Smooth in operation

While there is a need for indicators with finer graduations, such as our 708 Indicators, this indicator with graduations to .001" and 0.02mm will handle by far the majority of jobs. Shank diameter is 1/4" (6.3mm). Antimagnetic models are also available: (inch reading) 196A6Z and 196B6.

For full use, the operator first chooses the proper contact from the three hardened contact points that come with each model. Then the contact should be brought against the work with enough pressure to give the hand one full turn. Set the hand at zero by rotating the dial with the knurled bezel. This provides one full rotation of the hand both to the right and left of zero, showing a rise or drop in the work and the amount of that variation.

196R, 196MR

PT05471

PT05472

PT05473

Left: 196MB1
Below: 196B1

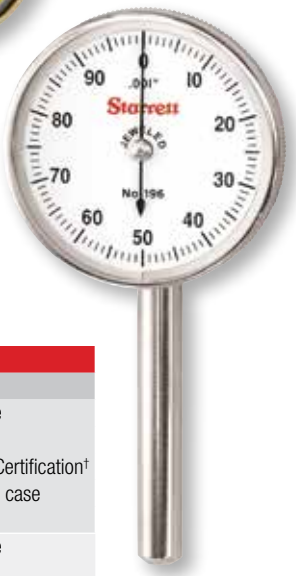

Contact Points and Adapters Only for 196 and 196M Universal Back Plunger Dial Indicators		
Catalog/Part No.	**EDP**	**Description**
196R	50711	Adapter**
196MR	67457	Adapter (metric threads)
PT05471	70617	Hardened steel contact point
PT05472	70618	
PT05473	70619	

** For Contact Points with #4-48 Thread, see AGD Contact Listings.

196 Universal Back Plunger Dial Indicators (1/4" Shank Diameter)					
Cat. No.	**EDP**	**Grad.**	**Range**	**Dial Reading**	**Description**
196A1Z	50697	.001"	.200"	0-100	Indicator with 3 contact points, adapter, 4 attachments* in case
196B1	50699				Indicator with 3 contact points and adapter only
196B1 W/SLC	66865				Indicator with 3 contact points, adapter, and Standard Letter of Certification†
196A6Z	50701				Antimagnetic Indicator with 3 contact points, 4 attachments* in case
196B6	50702				Antimagnetic Indicator with 3 contact points only
196A5Z	50714	.001"	.200"	0-50-0	Indicator with 3 contact points, adapter, 4 attachments* in case
196B5	50717				Indicator with 3 contact points and adapter only
196M Universal Back Plunger Dial Indicators (6.3mm Shank Diameter)					
Cat. No.	**EDP**	**Grad.**	**Range**	**Dial Reading**	**Description**
196MA1Z	65251	0.02mm	5mm	0-100 Yellow Dial Face	Indicator with 3 contact points, adapter, 4 attachments* in case
196MB1	65252				Indicator with 3 contact points and adapter only
196MA5Z	65253	0.02mm	5mm	0-50-0 Yellow Dial Face	Indicator with 3 contact points, adapter 196R, 4 attachments* in case
196MB5	65254				Indicator with 3 contact points and adapter only

* Attachments include clamp, tool post holder, snug and hole attachment.
† Includes redemption card for Standard Letter of Certification (SLC).

Back Plunger Indicators

Attachments for 650, 651, 196 and 196M Back Plunger Dial Indicators and Universal Dial Indicators

A. Clamp

PT99437 With a 1-5/16" (33mm) flat or round capacity – 5/16" (8mm) post (PT03709-1/2) used with PT18718 Snug.

B. Tool Post Holder

PT99438 3/8" x 3/4" x 6" (9.5 x 19 x 150mm) with upright spindle (PT03820-0) 5/16" dia. x 4-1/2" length (8 x 114mm). Use with PT18718 Snug.

C. Snug Complete

PT18718. Post hole has a 5/16" diameter† and 3/32-1/4" holding capacity. Can be used on our 252 Height Transfer Gage, 57 and 257A and B Surface Gages, on 657A Magnetic Base and Swivel Post Assembly.

D. Snug Complete

PT18724. Post hole has a 3/8" diameter (9.5mm) and 3/32-1/4" (2.4-6.3mm) holding capacity. Can be used with our 57 and 257C and D Surface Gages or 657AA Magnetic Base with upright post.

E. Universal Snug

57S With spindle hole diameters 5/16", 3/8" (8, 9.5mm) and gripping hole diameters 9/64", 5/32", 3/16", 1/4" (3.5, 4, 4.8, 6.3mm).

F. Universal Snug

58S. With spindle hole diameters 1/4", 5/16", 3/8" (6.3, 8, 9.5mm). Gripping hole diameters range from 3/32-1/4" used on holders with smaller clamp hole.

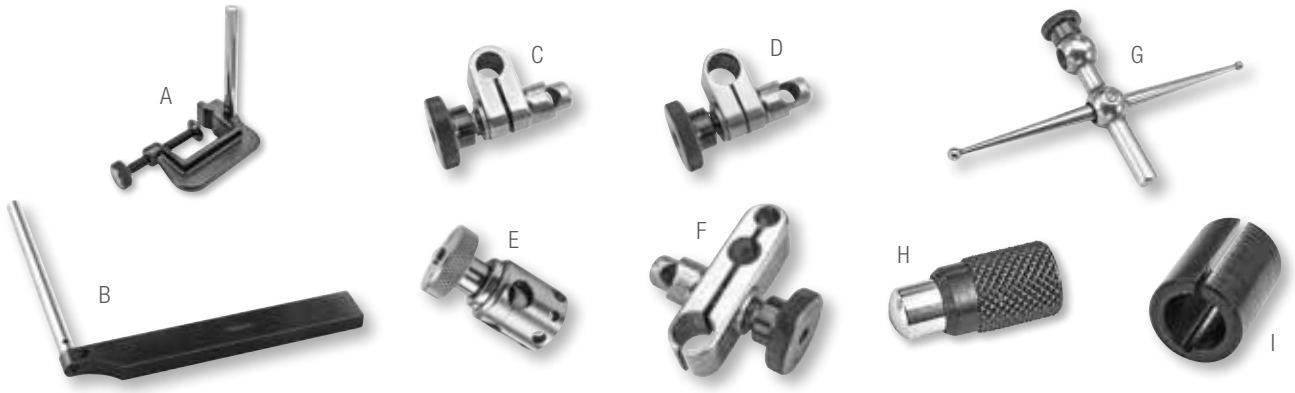

Attachments for 650, 651, 196 and 196M Back Plunger Dial Indicators and Universal Dial Indicators			
Photo Key	**Cat./Part No.**	**EDP**	**Description**
A*	PT99437	64492	Clamp
B*	PT99438	64493	Tool Post Holder
C*	PT18718	50709	Snug Complete
D	PT18724	50710	Snug Complete - 1/4" and 3/8" Holes
E	57S	50296	Universal Snug
F	58S	56613	
G*	196F	50706	Hole Attachment for 196 and 196M Only
H	PT08726A	66052	Shock Absorbing Anvil for 196 and 196M Only
I	PT00764	68850	Split Bushing for 196 and 196M Only

*Attachments marked with an asterisk (*) are furnished with all sets having "A" in the catalog number.
†For snug with 8mm post hole diameter and 2.4-6.3mm holding capacity, order PT27171, EDP 66457.

Attachments for 196 and 196M Only

G. Hole Attachment

196F. allows indicator be used over obstructions and inside holes to a depth of approximately 1-5/8" (40mm).

H. Shock Absorbing Anvil

PT08726A.

I. Split Bushing

PT00764. Allows attachment of 196 Indicator to 660 Magnetic Base.

Dial Indicators

Mechanical Dial Indicators and Attachments

Electronic Indicators/Indicator Holders

Accurate, rugged, versatile, convenient to use and inexpensive – for these reasons and more, mechanical dial indicators with bottom plungers are the measurement workhorses of industrial production.

Electronic indicators have an unmatched ability for the accurate recording of a great amount of measurement data which is used in a variety of Statistical Process Control (SPC) operations.

The first part of this section shows our complete line of mechanical/analog dial indicators – over 180 models to give you the widest selection in the industry. Our comparison guide, following these introduction pages, has all the significant specifications to help you make your selection.

Comparing AGD Design Specifications with Others

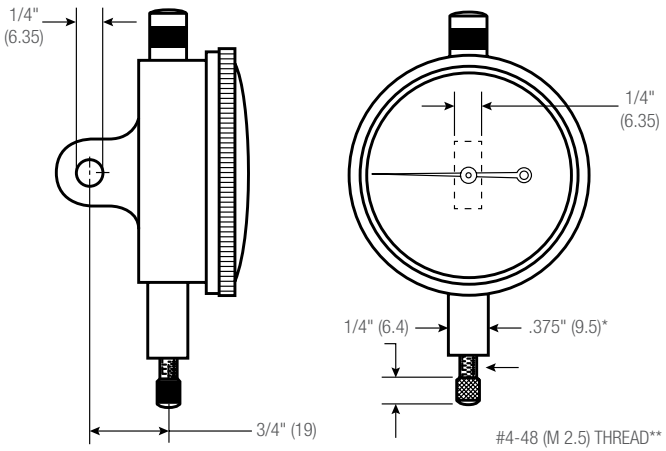

*There are two major differences between American Gage Design and other specifications. The first is the stem diameter. AGD specifies .375" (9.5mm) and some other standards specify an 8mm (.315") diameter. International specifications allow for either one and we can furnish both diameters. The .375" (9.5mm) diameter provides a little more protection for the rack when clamped on the stem – 8mm stems are available on any model, please specify when ordering.

** The other difference is the contact thread. AGD specifies a #4-48 thread. Other standards specify a metric thread, #M2.5.

Application Specification Factors

1. Regular analog styles with indicating hands are more readable than digital styles when the measurements are being visually monitored by an operator.
2. Select the dial size that gives you the readability you need. We offer five regular dial sizes which will fit most applications that have both space limitations and readability requirements.
3. Choose the accuracy and readout you need – don't select a .0001" (or 0.001mm) readout if .001" (or 0.01mm) will do your job.
4. Electronic styles are best when the measurement data needs to be collected, printed out or stored for future use.
5. Consider any special features you may need – inch or millimeter reading, special shockless movement, antimagnetic, long range, long stem, special backs, special contacts, special holders, etc. If you don't see what you need, please contact our Special Order Department. Even though we have a broad line of indicators to tackle most jobs, we also do a lot of special design, catering to the specific needs of our customers – challenge us!
6. Starrett indicators are made to American Gage Design Specifications (AGD). These specifications were developed in 1945 at the request of the U.S. Commerce Department through the National Bureau of Standards – now the National Institute of Standards and Technology (NIST). These specifications provide the dimensions to allow interchangeability between indicators of different manufacturers in fixturing. As you will see, these dimensions pertain to sizes for space consideration and for holding. Other countries have made their own design specifications which we can also furnish. However, the AGD design is probably more widely used, simply because it was the first standard created.
7. Basically, all dial indicators used worldwide fall into the following size ranges which relate to bezel diameters. Size 0 is a smaller dial indicator, having its own dimensions. Sizes 1 through 4 are AGD sizes. These sizes and the AGD dimensions are essentially the same for all manufacturers, except as noted.
8. Accuracy – All indicators should be "loaded" 1/8-1/4 of a turn before testing or measuring. Starrett dial indicators meet or exceed all known performance specifications. Most accuracies are specified plus or minus one graduation over the full range. This basically means a 2-1/2 turn range. Longer ranges have slightly wider tolerances. Starrett indicators are at least that accurate, but we are better than that in the final critical measuring zone of "10 o'clock to 2 o'clock" from zero.

   AGD specifies 2-1/3 turn indicators to cover any particular range. The reason for this is that in an effort to get the most out of the indicator, the operator "loads" it to about 1-1/3 turns and sets zero on his master. The indicator will now show the accurate deviation for a full revolution, plus or minus.

Dial Indicators

Design Features

- Rugged and simple unit construction with a "universally fitting" design as shown
- One gear unit assembly fits AGD Group 2 (our 25 Indicators), AGD Group 3 (our 655 Indicators) and AGD Group 4 (our 656 Indicators)
- The gear unit is constructed of a massive single bridge and plate assembly with a hardened stainless steel gear train
- All gear trains are fully jeweled for sensitivity, smoothness and life. (We do provide 1/2" and 1" range models with plain bronze bearings)
- The case is light but sturdy, with a hardened, precision stainless steel rack that rides in bronze bushings. Size Groups 0 and 1 indicators are of similar construction but smaller in size.
- Hardened stainless steel bottom stems can be held in fixtures without cramping rack action
- Easy readability with the best, balanced style of graduation and number combination. (Too thick and accuracy suffers; too thin and readability suffers)
- Balanced and tapered hands are easy to follow
- Special non-shock mechanism (can be furnished on most styles) is ideal for when an indicator may be subjected to repeated and excessive shocks

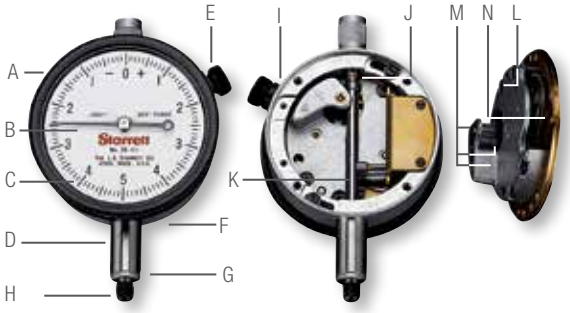

A. Sharp bezel serrations for positive grip
B. Non-reflecting white eggshell finish on dial (millimeter models have yellow dials)
C. Unbreakable crystal
D. Hardened stainless steel stem
E. Positive-acting clamp locks bezel in position
F. No-glare satin finish on case
G. .375" mounting diameter (all AGD models)
H. Interchangeable contact point
I. Four screw holes for 90º rotation of back
J. Direct acting compression spring eliminates side friction
K. Hardened stainless steel rack and spindle
L. Massive bridge for rigid bearing support
M. Replaceable low friction jewel bearings
N. Hardened stainless steel gears and pinions

Dials, Accessories and Options

Balanced or Continuous Dials – Starrett AGD indicators are furnished with a balanced dial (plus on right). A continuous dial (reading clockwise) may also be ordered.

Plus and Minus Graduations – Plus and minus readout – black figures read clockwise, red figures read counterclockwise, or colors reversed – are available on some 81 Dial Indicators.

Revolution Counters – All AGD indicators with 2-1/2 revolutions can be furnished with double dial and count hand at a slight additional cost. Intermediate and long-range indicators have revolution counters

Special Dials – Starrett dial indicators can be furnished with any standard dial

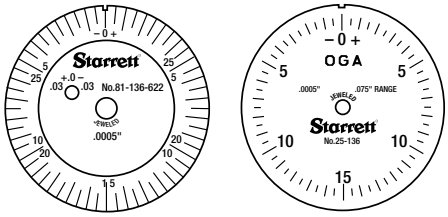

Far Left: Dial with Plus and Minus Graduations
Left: Dial with Special Trademark Imprint

marked with your company name or trademark. No charge when the indicators are purchased in lots of 25 or more. For quantities under 25, there is an additional charge. Prices are available on request.

Antimagnetic Mechanism – An antimagnetic mechanism can be furnished on most 81, 25, 655, 656, 196B6 Dial Indicators. This mechanism is desirable when the indicator is used near a magnetic chuck or a similar magnetic field which would disturb its operation. See individual listings for availability.

Attachments and Accessories – A variety of attachments and accessories are provided for mounting dial indicators on machine tools, inspection equipment and special fixtures, including:

- Backs
- Contact Points
- Dust Guard
- Hole Attachments
- Special Non-shock mechanism
- Spindle Travel Controls
- Stem and Back Mounting Accessories
- Tolerance and Maximum Reading Hands

Gear Unit + Case Assembly = Complete Indicator

Dial Indicators

80 Miniature Dial Indicators and Accessories

ANSI GROUP 0

RANGES UP TO .100"

1-1/4" BEZEL, 7/32" STEM

Similar in design to AGD dial indicators, these miniatures are built for gaging dimensions in tight places. Equipped with high precision, low friction movements, they are made in four models, all with frictionally adjustable bezels for quick, positive zero setting. No-glare, white eggshell finish dials. Black bezel, silver finish on case. Furnished with balanced dial, jeweled bearings and lug-on-center back.

80SB split bushing available .219" to 3/8".

Dimensions with lug-on-center back

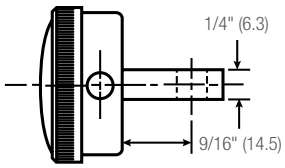

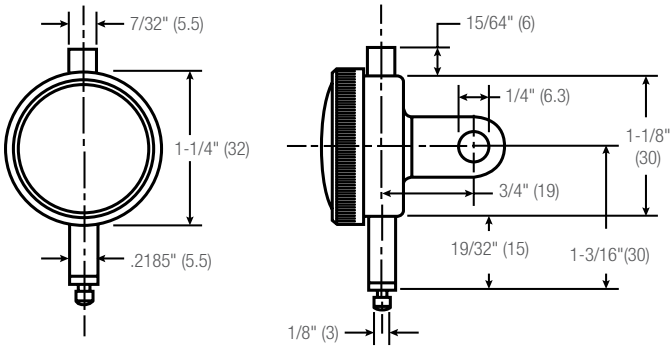

Free drafting template available for this size.
Write The L. S. Starrett Co. at:
121 Crescent Street
Athol, MA 01331.

80 Miniature Dial Indicators					
Cat. No.	EDP	Graduation	Range One Rev.	Total	Dial Reading
80-114J	55891	.0001"	.004"	.010"	0-2-0
80-111J	67714		.010"	.025"	0-5-0
80-134J	55892	.0005"	.020"	.050"	0-10-0
80-144J	55893	.001"	.040"	.100"	0-20-0

80-114J

80-134J

80-144J

Contact Points

The regular contact point is furnished standard on all 80 Dial Indicators. Button, cone and flat contact points are available individually, as listed. All have #0-80 thread.

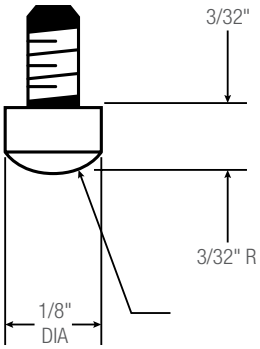

PT25044 Regular Contact Point
(Standard on all 80 Dial Indicators)

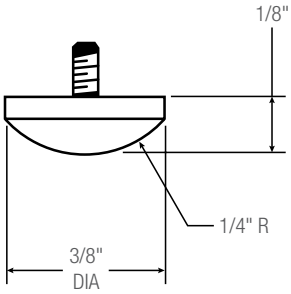

PT25159 Button Contact Point

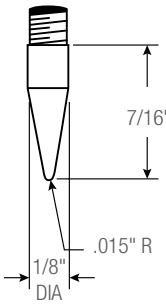

PT25161 Cone Contact Point

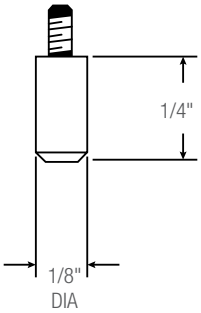

PT25160 Flat Contact Point

80-111J

Backs

The lug-on-center back is furnished standard on all 80 Dial Indicators.

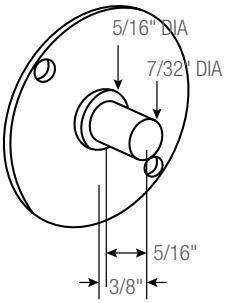

PT25158 Post-Type Lug Back

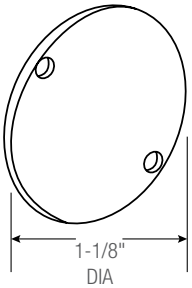

PT25079 Flat Back

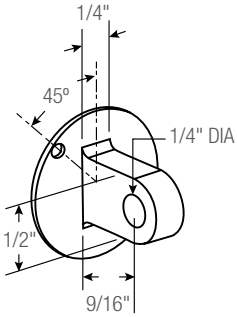

PT25053 Lug-on-Center Back
(Standard on all 80 Dial Indicators)

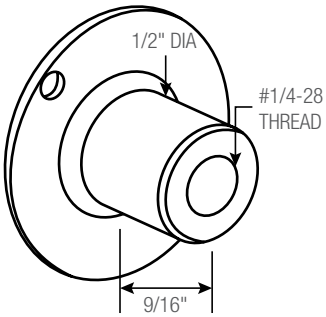

PT25071 Screw-Type Lug Back

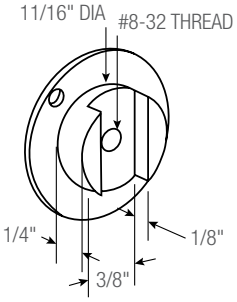

PT25157 Adjustable Bracket Back

NOTE: Contact points and backs can be ordered individually. Order by part number/EDP number.

Part No.	EDP	Description
PT25044	72023	Regular Contact Point
PT25159	72024	Button Contact Point
PT25161	72025	Cone Contact Point
PT25160	72026	Flat Contact Point
PT25079	72028	Flat Back
PT25071	72030	Screw-Type Lug Back
PT25053	72027	Lug-on Center Back
PT25157	72029	Adjustable Bracket Back
PT25158	72031	Post-Type Lug Back

Dial Indicators

81, 25, 655 and 656 AGD Dial Indicators

This comparison table is an aid to help you find the indicator with the specific graduations and ranges you are looking for. Refer to the following pages for the exact catalog number and EDP number.

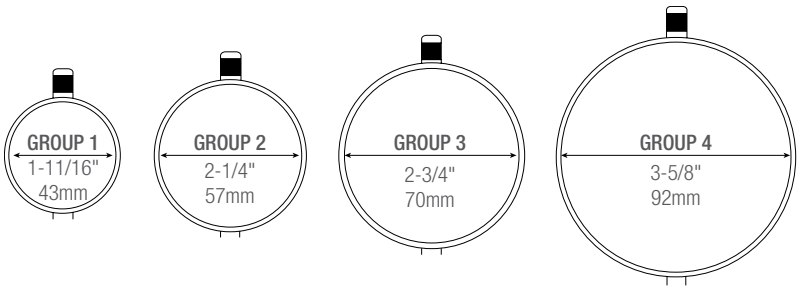

81, 25, 655 and 656 AGD Dial Indicators (White Dials Furnished Standard)

Graduation	Range One Rev.	Total	Dial Reading	Group 1 81 Indictators	Group 2 25 Indicators	Group 3 655 Indicators	Group 4 656 Indicators
.00005"	.006"	.015"	0-3-0 0-6		25-109 25-209		656-109 656-209
.0001"	.006"	.015"	0-3-0		25-116		
.0001"	.008"	.020"	0-4-0 0-8		25-118 25-218	655-118	656-118
.0001"	.010"	.025"	0-5-0 0-10	81-111 81-211	25-111 25-211	655-111 655-211	656-111 656-211
.0001"	.010"	.025"	0.1 –0.10 –0.10 0.1	81-111-624* 81-111-630*			
.0001"	.010"	.200"	0-5-0 0-10		25-511* 25-611*	655-511* 655-611*	656-511* 656-611*
.0001"	.020"	.400"	0-10-0 0-20				656-517* 656-617*
.00025"	.010"	.025"	0-5-0 0-10	81-124 81-224	25-124 25-224	655-124 655-224	656-124 656-224
.00025"	.020"	.050"	0-10-0 0-20	81-128 81-228	25-128 25-228	655-128 655-228	656-128 656-228
.00025"	.030"	.075"	0-15-0 0-30			655-129 655-229	656-129 656-229
.0005"	.020"	.050"	0-10-0 0-20	81-134 81-234	25-134 25-234	655-134 655-234	656-134 656-234
.0005"	.030"	.075"	0-15-0 0-30	81-136 81-236	25-136 25-236	655-136 655-236	656-136 656-236
.0005"	.030"	.075"	0.3 –0.30 –0.30 0.3	81-136-622* 81-136-623*			
.0005"	.040"	.100"	0-20-0 0-40	81-138 81-238	25-138 25-238	655-138 655-238	656-138 656-238
.0005"	.050"	.125"	0-25-0 0-50	81-131 81-231	25-131 25-231	655-131 655-231	656-131 656-231
.0005"	.050"	.500"	0-50		25-431*†		
.0005"	.050"	1.000"	0-50		25-631*†		

* With revolution counter on dial
† With top lift mechanism

AGD Design Specifications: Bezel Diameters

Design	Size Group	Minimum Diameter in	Minimum Diameter mm	Maximum Diameter in	Maximum Diameter mm
	0	1"	25mm	1-3/8"	35mm
AGD	1	1-3/8"	35mm	2"	50mm
	2	2"	50mm	2-3/8"	60mm
	3	2-3/8"	60mm	3"	75mm
	4	3"	76mm	3-3/4"	95mm

81, 25, 655 and 656 AGD Dial Indicators (White Dials Furnished Standard)							
Graduation	Range One Rev.	Total	Dial Reading	Group 1 81 Indictators	Group 2 25 Indicators	Group 3 655 Indicators	Group 4 656 Indicators
.001"	.020"	.050"	0-10-0 0-20	81-142 81-242	25-142 25-242	655-142 655-242	656-142 656-242
.001"	.030"	.075"	0-15-0 0-30	81-143 81-243	25-143 25-243	655-143 655-243	656-143 656-243
.001"	.030"	.075"	+0.30, –0.30 –0.30, +0.30	81-143-628* 81-143-629*			
.001"	.040"	.100"	0-20-0 0-40	81-144 81-244	25-144 25-244	655-144 655-244	656-144 656-244
.001"	.050"	.125"	0-25-0 0-50	81-145 81-245	25-145 25-245	655-145 655-245	656-145 656-245
.001"	.100"	.250"	0-50-0 0-100	81-141 81-241	25-141 25-241	655-141 655-241	656-141 656-241
.001"	.100"	.500"	0-50-0 0-100		25-341/5*† 25-441/5*†	655-341/5* 655-441/5*	656-341/5* 656-441/5*
.001"	.100"	1.000"	0-50-0 0-100		25-341*† 25-441*†	655-341*† 655-441*†	656-341*† 656-441*†
.001"	.100"	2.000" 3.000" 4.000" 5.000" 6.000" 7.000" 8.000" 9.000" 10.000" 11.000" 12.000"	0-100		25-2041* 25-3041* 25-4041* 25-5041*	655-2041* 655-3041* 655-4041* 655-5041*	656-2041* 656-3041* 656-4041* 656-5041* 656-6041* 656-7041* 656-8041* 656-9041* 656-10041* 656-11041* 656-12041*

81, 25, 655 and 656 AGD Dial Indicators (Yellow Dials Furnished Standard)							
Graduation	Range One Rev.	Total	Dial Reading	Group 1 81 Indictators	Group 2 25 Indicators	Group 3 655 Indicators	Group 4 656 Indicators
0.001mm	0.1mm	0.25mm	0-50-0 0-100		25-151* 25-251*		
0.002mm	0.2mm	0.5mm	0-10-0 0-20	81-161 81-261	25-161 25-261	655-161 655-261	656-161 656-261
0.01mm	1mm	2.5mm	0-50-0 0-100	81-181 81-281	25-181 25-281	655-181 655-281	656-181 656-281
0.01mm	1mm	10mm	0-50-0 0-100		25-381*† 25-481*		
0.01mm	1mm	25mm	0-50-0 0-100		25-781*† 25-881*†	655-881*†	656-881*†
0.01mm	1mm	50mm	0-100		25-2081*	655-2081*	
0.01mm	1mm	75mm	0-100		25-3081*	655-3081*	
0.01mm	1mm	100mm	0-100		25-4081*	655-4081*	
0.01mm	1mm	125mm	0-100		25-5081*	655-5081*	

* With revolution counter on dial
† With top lift mechanism

Dial Indicators

Starrett Dial Numbering and Line Styles for Dial Indicators

These next three pages include all Starrett dial styles. (Actual size not shown.) Refer to the graduation, then range, and catalog number below the dial and then see the following pages for the specific dial reading and other indicator information. Most of the dials shown have balanced styles. Continuous dials have the same graduations, but have consecutive numbers instead. For most indicators, the first number after the base catalog number signifies dial style. The number "1" signifies balanced dials (example: 25-109) and number "2" signifies continuous dials (example: 25-209).

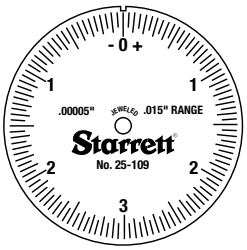

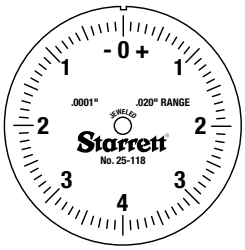

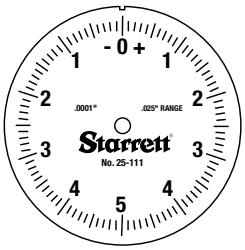

.00005" Graduation	
Total Range	.015"
Cat. No.	25-109 656-109

.0001" Graduation			
Total Range	.015"	.020"	.025"
Cat. No.	25-116	25-118 655-118 656-118	25-111 80-111 81-111 655-111 656-111

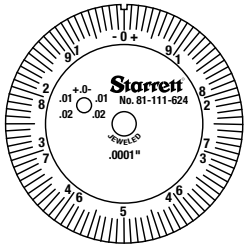

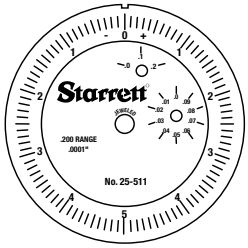

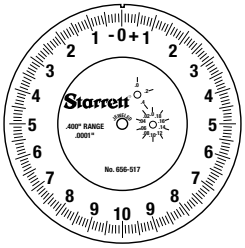

.0001" Graduation			
Total Range	.025"	.200"	.400"
Cat. No.	81-111-624 (with double row figures)	25-511 655-511 656-511	656-517

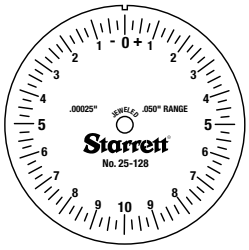

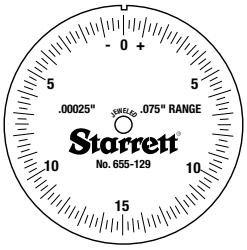

.00025" Graduation			
Total Range	.025"	.050"	.075"
Cat. No.	81-124 25-124 655-124 656-124	81-128 25-128 655-128 656-128	655-129 656-129

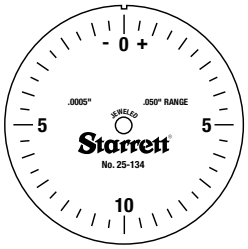

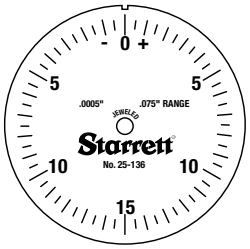

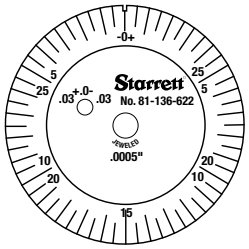

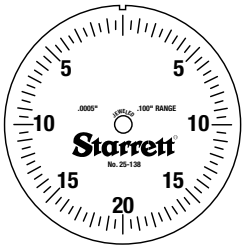

.0005" Graduation				
Total Range	.050"	.075"	.075"	.100"
Cat. No.	81-134 25-134 655-134 656-134	81-136 25-136 655-136 656-136	81-136-622 (with double row figures)	81-138 25-138 655-138 656-138

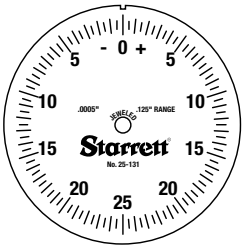

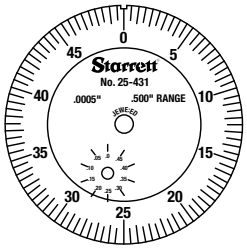

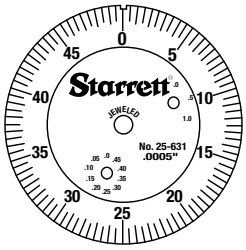

.0005" Graduation			
Total Range	.125"	.500"	1.000"
Cat. No.	81-131 25-131 655-131 656-131	25-431	25-631

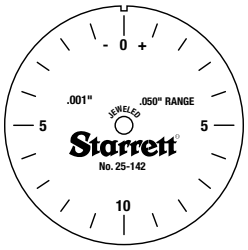

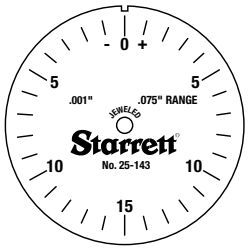

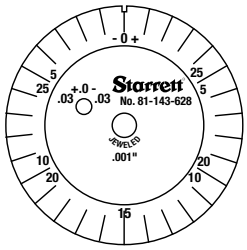

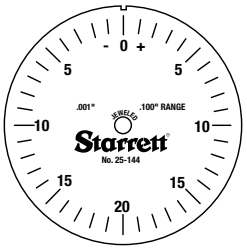

.001" Graduation				
Total Range	.050"	.075"	.075"	.100"
Cat. No.	81-142 81-144 *25-142 *655-142 *656-142	81-143 25-143 655-143 656-143	81-143-628 (with double row figures)	 *25-144 *655-144 *656-144

* Also on long range models.

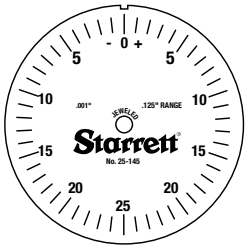

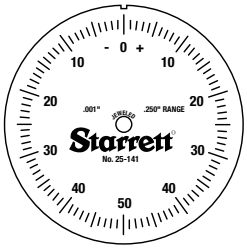

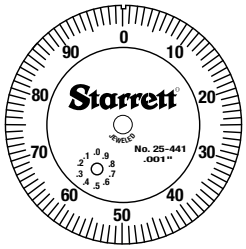

.001" Graduation			
Total Range	.125"	.250"	.500", 1.000"
Cat. No.	81-145 *25-145 *655-145 *656-145	81-141 *25-141 *655-141 *656-141	25-441, 25-441/5 655-441, 655-441/5 656-441, 656-441/5

* Also on long range models.

Dial Indicators

Starrett Dial Numbering and Line Styles for Dial Indicators

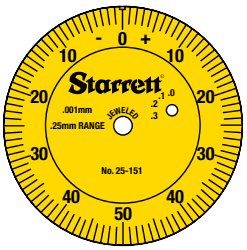

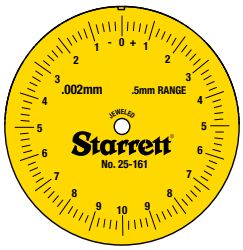

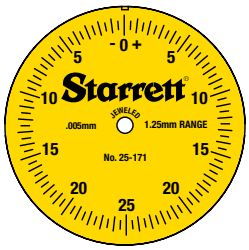

0.001mm Graduation	
Total Range	.25mm
Cat. No.	25-151

0.002mm Graduation	
Total Range	0.5mm
Cat. No.	No.81-161 25-161 655-161 656-161

0.005mm Graduation	
Total Range	1.25mm
Cat. No.	25-171

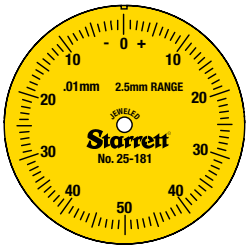

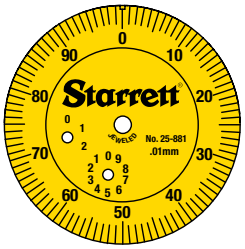

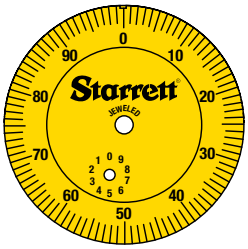

0.01mm Graduation				
Total Range	2.5mm	25mm	10mm	50, 75, 100, 125mm
Cat. No.	81-181 25-181 655-181 656-181	25-881 655-881 656-881	25-381	25-2081 25-3081 25-4081 25-5081

Dial Indicators

81 Dial Indicators

AGD GROUP 1

RANGES UP TO .250" AND 2.5MM

These Indicators have a shockless, hardened steel gear train and jewel bearings. They are furnished with a lug-on-center back. Antimagnetic and special non-shock mechanisms are options available for all models. For more information on these and other attachments, accessories and contact points, refer to the end of the AGD Dial Indicator listings. For dial styles, see previous pages.

If lift lever is desired, indicator must be ordered with case stem cap.

81-141J

81-161J

81 Dial Indicators					
Cat. No.	EDP	Graduation	Range One Rev.	Total	Dial Reading
81-111J 81-211J	53378 53414	.0001"	.010"	.025"	0-5-0 0-10
81-124J 81-224J	53384 53416	.00025"	.010"	.025"	0-5-0 0-10
81-128J 81-228J	53386 53418	.00025"	.020"	.050"	0-10-0 0-20
81-134J 81-234J	53390 53422	.0005"	.020"	.050"	0-10-0 0-20
81-136J 81-236J	53392 53424	.0005"	.030"	.075"	0-15-0 0-30
81-138J 81-238J	53398 53426	.0005"	.040"	.100"	0-20-0 0-40
81-131J 81-231J	53388 53420	.0005"	.050"	.125"	0-25-0 0-50
81-142J 81-242J	53402 53430	.001"	.020"	.050"	0-10-0 0-20
81-143J 81-243J	53404 53432	.001"	.030"	.075"	0-15-0 0-30
81-144J 81-244J	53408 53434	.001"	.040"	.100"	0-20-0 0-40
81-145J 81-245J	53410 53436	.001"	.050"	.125"	0-25-0 0-50
81-141J 81-241J	53400 53428	.001"	.100"	.250"	0-50-0 0-100

81 Dial Indicators						
Cat. No.	EDP	Graduation	Range One Rev.	Total	Dial Reading	Stem Dia.
81-161J 81-161J-8	56043 64643	0.002mm	0.2mm	0.5mm	0-10-0	.375" (8mm)
81-261J 81-261J-8	56045 64644	0.002mm	0.2mm	0.5mm	0-20	.375" (8mm)
81-181J 81-181J-8	53412 64645	0.01mm	1.0mm	2.5mm	0-50-0	.375" (8mm)
81-281J 81-281J-8	53438 64646	0.01mm	1.0mm	2.5mm	0-100	.375" (8mm)

Dial Indicators

81 Dial Indicators with Double Row Figures

AGD GROUP 1
RANGES UP TO .075"

These indicators have the exact same features as our 81 Dial Indicators on the previous page, except the dials have double-row figures, as illustrated, and they cannot be specified with a special non-shock mechanism.

If lift lever is desired, indicator must be ordered with case stem cap.

81-111-624J

81 Dial Indicators with Double Row Figures

Cat. No.	EDP	Graduation	Dial Reading	Figures Direction	Color	Range One Rev.	Range Total
81-111-624J	53380	.0001"	-10 –0-10	Clockwise Counter-clockwise	Black Red	.010"	.025"
81-111-630J	53382	.0001"	-10 –0-10	Counter-clockwise Clockwise	Black Red	.010"	.025"
81-136-622J	53394	.0005"	-30 –0-30	Clockwise Counter-clockwise	Black Red	.030"	.075"
81-136-623J	53396	.0005"	-30 –0-30	Counter-clockwise Clockwise	Black Red	.030"	.075"
81-143-628J	53406	.001"	-30 –0-30	Clockwise Counter-clockwise	Black Red	.030"	.075"
81-143-629J	66666	.001"	-30 –0-30	Counter-clockwise Clockwise	Black Red	.030"	.075"

Other models with double-row figures can be furnished by request.

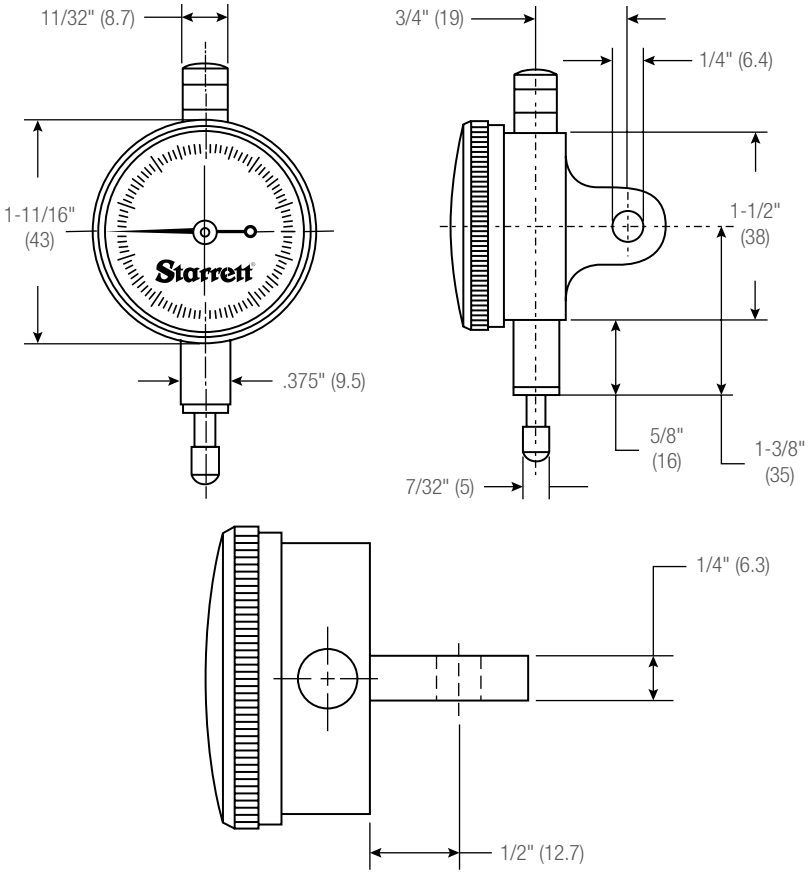

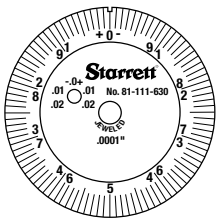

81-111-630J

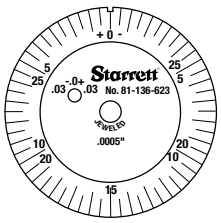

81-136-623J

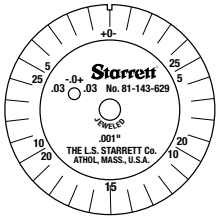

81-143-629J

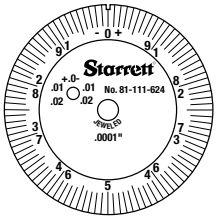

81-111-624J

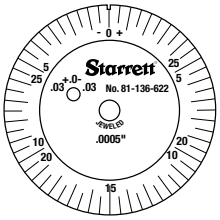

81-136-622J

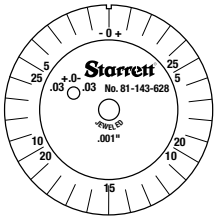

81-143-628J

Free drafting template available for this size.
Write The L. S. Starrett Co. at:
121 Crescent Street
Athol, MA 01331

Dial Indicators

25 Dial Indicators

AGD GROUP 2

RANGES UP TO 1" AND 25MM

These indicators have a shockless, hardened steel gear train and jewel bearings, except where noted. They are furnished with a lug-on-center back. Antimagnetic mechanism is optional for all models. Special non-shock mechanism is available for all models except 25-109, 25-209 and 25-116. For more information on these and other attachments, accessories and contact points, refer to the end of the AGD Dial Indicator listings. For dial styles, see previous pages.

If lift lever is desired, indicator must be ordered with case stem cap.

25 Dial Indicators with Jewel Bearings

Cat. No.	EDP	Graduation	Range One Rev.	Total	Dial Reading	Stem Dia.
25-151J 25-151J-8	67644 68646	0.001mm	0.1mm	0.25mm	0-50-0	.375" (9.5mm)
25-251J 25-251J-8	68118 68647	0.001mm	0.1mm	0.25mm	0-100	.375" (9.5mm)
25-161J 25-161J-8	53250 64651	0.002mm	0.2mm	0.5mm	0-10-0	.375" (9.5mm)
25-261J 25-261J-8	53281 64652	0.002mm	0.2mm	0.5mm	0-20	.375" (9.5mm)
25-171J	68643	0.005mm	0.5mm	1.25mm	0-25-0	.375"
25-181J 25-181J-8	53252 64653	0.01mm	1.0mm	2.5mm	0-50-0	.375" (9.5mm)
25-281J 25-281J-8	53283 64654	0.01mm	1.0mm	2.5mm	0-100	.375" (9.5mm)
25-381J 25-381J-8	53289 64655	0.01mm	1.0mm	10mm	0-50-0	.375" (9.5mm)
25-481J 25-481J-8	53297 64656	0.01mm	1.0mm	10mm	0-100	.375" (9.5mm)
25-781J 25-781J-8	53305 64657	0.01mm	1.0mm	25mm	0-50-0	.375" (9.5mm)
25-881J 25-881J-8	53307 64658	0.01mm	1.0mm	25mm	0-100	.375" (9.5mm)

25-111J

25-161J

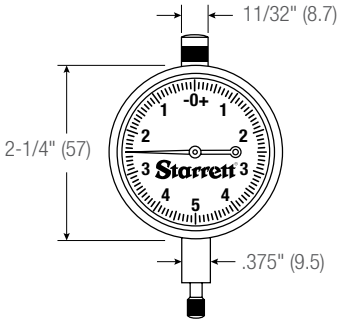

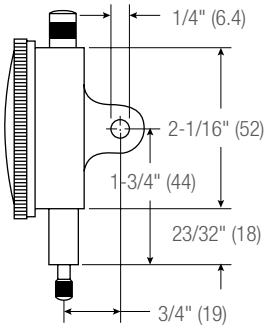

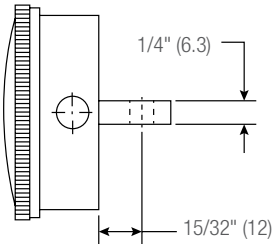

Free drafting template available for this size.
Write The L. S. Starrett Co. at:
121 Crescent Street
Athol, MA 01331.

25 Dial Indicators with Jewel Bearings

Cat. No.	EDP	Graduation	Range One Rev.	Total	Dial Reading
25-109J 25-209J	53222 53254	.00005"	.006"	.015"	0-3-0 0-6
25-116J	53225	.0001"	.006"	.015"	0-3-0
25-118J 25-218J	53226 53257	.0001"	.008"	.020"	0-4-0 0-8
25-111J 25-211J	53223 53255	.0001"	.010"	.025"	0-5-0 0-10
25-511J 25-611J	53299 53301	.0001"	.010"	.200"	0-5-0 0-10
25-124J 25-224J	53228 53259	.00025"	.010"	.025"	0-5-0 0-10
25-128J 25-228J	53230 53261	.00025"	.020"	.050"	0-10-0 0-20
25-134J 25-234J	53234 53265	.0005"	.020"	.050"	0-10-0 0-20
25-136J 25-236J	53236 53267	.0005"	0.03	.075"	0-15-0 0-30
25-138J 25-238J	53238 53269	.0005"	.040"	.100"	0-20-0 0-40
25-131J	53232	.0005"	.050"	.125"	0-25-0
25-231J 25-431J 25-631J	53263 53292 53304	.0005"	.050"	.125" .500" 1.000"	0-50
25-142J 25-242J	53242 53273	.001"	.020"	.050"	0-10-0 0-20
25-143J 25-243J	53244 53275	.001"	.030"	.075"	0-15-0 0-30
25-144J 25-244J	53246 53277	.001"	.040"	.100"	0-20-0 0-40
25-145J 25-245J	53248 53279	.001"	.050"	.125"	0-25-0 0-50
25-141J 25-241J	53240 53271	.001"	.100"	.250"	0-50-0 0-100
25-341/5J	53285	.001"	.100"	.500"	0-50-0
25-441/5J 25-441/5J W/SLC*	53293 66864	.001"	.100"	.500"	0-100
25-341J	53287	.001"	.100"	1.000"	0-50-0
25-441J 25-441/J W/SLC*	53295 66863	.001"	.100"	1.000"	0-100

25 Dial Indicators with Jewel Bearings

Cat. No.	EDP	Graduation	Range One Rev.	Total	Dial Reading
25-341/5P 25-441/5P	53286 53294	.001"	.100"	.500"	0-50-0 0-100
25-341P 25-441P	53288 53296	.001"	.100"	1.000"	0-50-0 0-100

* Includes redemption card for Standard Letter of Certification.

25-441J with top lift

656-129J case stem cap design required for use with lift lever
See page 171

Dial Indicators

253 Dial Indicator Sets

INCH AND MILLIMETER READING

These sets provide in one handy, compact kit three 25 Dial Indicators to handle most gaging jobs at a minimum cost. Sets are ideal for tool and die shops, machine shops and toolrooms having occasional work where a heavy investment in dial indicators would not be practical. The indicators are furnished with jewel bearings.

253 Dial Indicator Sets

Cat. No.	EDP	Description
S253Z	51218	Set of 3 Inch Reading Dial Indicators: 25-111J, 25-131J and 25-441J
S253MZ	56283	Set of 3 Millimeter Reading Dial Indicators: 25-161J, 25-181J and 25-881J

Sets furnished in attractive, protective case.

655 Dial Indicators

AGD GROUP 3

RANGES UP TO 1" AND 25MM

These indicators have a shockless, hardened steel gear train and jewel bearings. They are furnished with a lug-on-center back. Antimagnetic and special non-shock mechanisms are options available for all models. For more information on these and other attachments, accessories and contact points, refer to the end of the AGD Dial Indicator listings. For dial styles, see previous pages.

If lift lever is desired, indicator must be ordered with case stem cap.

655 Dial Indicators

Cat. No.	EDP	Graduation	Range One Rev.	Total	Dial Reading	Stem Dia.
655-161J 655-161J-8	53533 64659	0.002mm	0.2mm	0.5mm	0-10-0	.375" (9.5mm)
655-261J 655-261J-8	53603 64660	0.002mm	0.2mm	0.5mm	0-20	.375" (9.5mm)
655-181J 655-181J-8	53535 64661	0.01mm	1.0mm	2.5mm	0-50-0	.375" (9.5mm)
655-281J 655-281J-8	53605 64868	0.01mm	1.0mm	2.5mm	0-100	.375" (9.5mm)
655-881J 655-881J-8	56229 64869	0.01mm	1.0mm	25mm	0-100	.375" (9.5mm)

655 Dial Indicators

Cat. No.	EDP	Graduation	Range One Rev.	Total	Dial Reading
655-118J	53507	.0001"	.008"	.020"	0-4-0
655-111J 655-211J	53505 53537	.0001"	.010"	.025"	0-5-0 0-10
655-511J 655-611J	53615 53617	.0001"	.010"	.200"	0-5-0 0-10
655-124J 655-224J	53509 53539	.00025"	.010"	.025"	0-5-0 0-10
655-128J 655-228J	53511 53541	.00025"	.020"	.050"	0-10-0 0-20
655-129J 655-229J	53513 53543	.00025"	.030"	.075"	0-15-0 0-30
655-134J 655-234J	53517 53587	.0005"	.020"	.050"	0-10-0 0-20
655-136J 655-236J	53519 53589	.0005"	.030"	.075"	0-15-0 0-30
655-138J 655-238J	53521 53591	.0005"	.040"	.100"	0-20-0 0-40
655-131J 655-231J	53515 53585	.0005"	.050"	.125"	0-25-0 0-50
655-142J 655-242J	53525 53595	.001"	.020"	.050"	0-10-0 0-20
655-143J 655-243J	53527 53597	.001"	.030"	.075"	0-15-0 0-30
655-144J 655-244J	53529 53599	.001"	.040"	.100"	0-20-0 0-40
655-145J 655-245J	53531 53601	.001"	.050"	.125"	0-25-0 0-50
655-141J 655-241J	53523 53593	.001"	.100"	.250"	0-50-0 0-100
655-341/5J 655-441/5J	53607 53611	.001"	.100"	.500"	0-50-0 0-100
655-341J 655-441J	53609 53613	.001"	.100"	1.000"	0-50-0 0-100

655-111J

655-161J-8

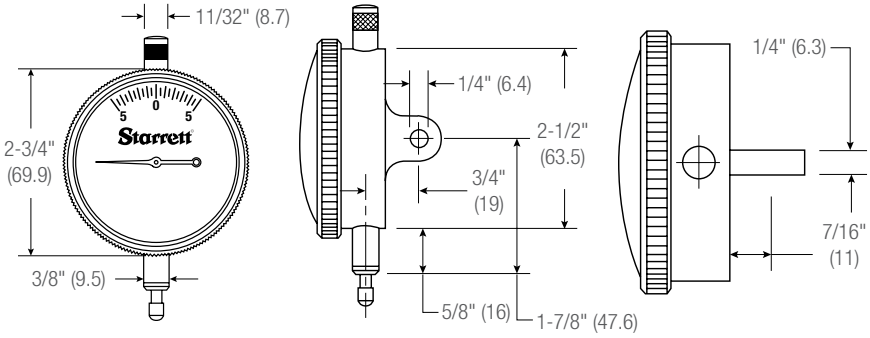

655-131J with top lift

655-341J with stem cap

Dial Indicators

656 Dial Indicators

AGD GROUP 4

RANGES UP TO 1" AND 25MM

These indicators have a shockless, hardened steel gear train and jewel bearings. They are furnished with a lug-on-center back. Antimagnetic mechanism is optional for all models. Special non-shock mechanism is available for all models except 656-109 and 656-209. For more information on these and other attachments, accessories and contact points, refer to the end of the AGD Dial Indicator listings. For dial styles, see previous pages.

If lift lever is desired, indicator must be ordered with case stem cap.

656 Dial Indicators

Cat. No.	EDP	Graduation	Range One Rev.	Total	Dial Reading	Stem Dia.
656-161J 656-161J-8	53690 64870	0.002mm	0.2mm	0.5mm	0-10-0	.375" (9.5mm)
656-261J 656-261J-8	53779 64871	0.002mm	0.2mm	0.5mm	0-20	.375" (9.5mm)
656-181J 656-181J-8	53692 64872	0.01mm	1.0mm	2.5mm	0-50-0	.375" (9.5mm)
656-281J 656-281J-8	53781 64873	0.01mm	1.0mm	2.5mm	0-100	.375" (9.5mm)
656-881J 656-881J-8	56234 64874	0.01mm	1.0mm	25mm	0-100	.375" (9.5mm)

656 Dial Indicators

Cat. No.	EDP	Graduation	Range One Rev.	Total	Dial Reading
656-109J 656-209J	53661 53694	.00005"	.006"	.015"	0-3-0 0-6
656-118J	53664	.0001"	.008"	.020"	0-4-0
656-111J 656-211J	53662 53695	.0001"	.010"	.025"	0-5-0 0-10
656-511J 656-611J	53791 53795	.0001"	.010"	.200"	0-5-0 0-10
656-517J 656-617J	53793 53797	.0001"	.020"	.400"	0-10-0 0-20
656-124J 656-224J	53666 53697	.00025"	.010"	.025"	0-5-0 0-10
656-128J 656-228J	53668 53699	.00025"	.020"	.050"	0-10-0 0-20
656-129J 656-229J	53670 53701	.00025"	.030"	.075"	0-15-0 0-30
656-134J 656-234J	53674 53705	.0005"	.020"	.050"	0-10-0 0-20
656-136J 656-236J	53676 53707	.0005"	.030"	.075"	0-15-0 0-30
656-138J 656-238J	53678 53709	.0005"	.040"	.100"	0-20-0 0-40
656-131J 656-231J	53672 53703	.0005"	.050"	.125"	0-25-0 0-50
656-142J 656-242J	53682 53713	.001"	.020"	.050"	0-10-0 0-20
656-143J 656-243J	53684 53715	.001"	.030"	.075"	0-15-0 0-30
656-144J 656-244J	53686 53717	.001"	.040"	.100"	0-20-0 0-40
656-145J 656-245J	53688 53719	.001"	.050"	.125"	0-25-0 0-50
656-141J 656-241J	53680 53711	.001"	.100"	.250"	0-50-0 0-100
656-341/5J 656-441/5J	53783 53787	.001"	.100"	.500"	0-50-0 0-100
656-341J 656-441J	53785 53789	.001"	.100"	1.000"	0-50-0 0-100

656-111J

656-161J-8

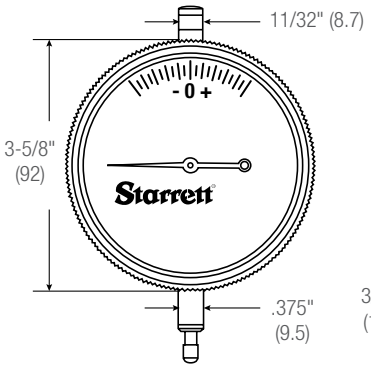

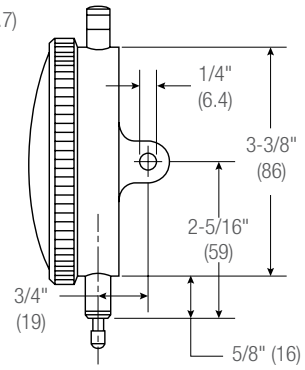

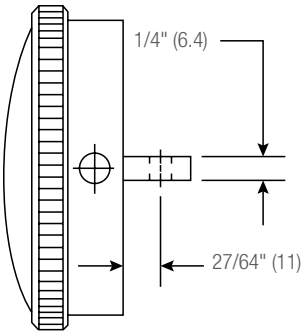

Free drafting template available for this size.
Write The L. S. Starrett Co. at:
121 Crescent Street
Athol, MA 01331.

656-441J with top lift

656-129J stem cap required for use with lift lever

See page 170

Dial Indicators

25, 655, 656 Dial Indicators with Long Range

2-5" RANGES

These indicators have a shockless, hardened steel gear train and are furnished with jewel bearings and lug-on-center backs unless otherwise ordered.

- Conforms to AGD specifications except for range
- Stem cap supplied as standard – top lift available when specified
- Furnished with continuous reading double dial with direct reading count hands

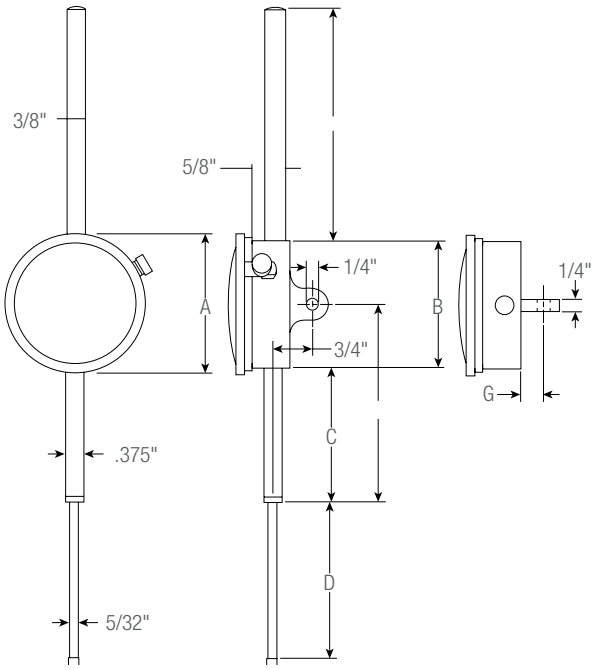

25, 655, 656 Dial Indicators with Long Range

Cat. No.	EDP	Graduation	Range	Dial Reading	Revs. of Hand	AGD Group	Bezel Diameter
25-2041J	53309					2	2-1/4"
655-2041J	53619	.001"	2.000"	0-100	20	3	2-3/4"
656-2041J	53799					4	3-5/8"
25-3041J	53310					2	2-1/4"
655-3041J	53620	.001"	3.000"	0-100	30	3	2-3/4"
656-3041J	53800					4	3-5/8"
25-4041J	53311					2	2-1/4"
655-4041J	53621	.001"	4.000"	0-100	40	3	2-3/4"
656-4041J	53801					4	3-5/8"
25-5041J	53312					2	2-1/4"
655-5041J	53622	.001"	5.000"	0-100	50	3	2-3/4"
656-5041J	53802					4	3-5/8"

Not available with special non-shock mechanism. For other attachments, accessories and contact points, refer to the end of the AGD Dial Indicator listings.

Approximate Dimensions

Cat. No.	A	B	C	D	E	F	G
25-2041J	2-1/4"	2-1/16"	1-13/16"	2-1/16"	3-3/32"	2-7/8"	15/32"
655-2041J	2-3/4"	2-1/2"	1-5/8t"	2-1/16"	3-3/32"	2-7/8"	7/16"
656-2041J	3-5/8"	3-3/8"	1-1/4"	2-1/16"	3-3/32"	3"	27/64"
25-3041J	2-1/4"	2-1/16"	2-13/16"	3-1/16"	4-9/16"	3-7/8"	15/32"
655-3041J	2-3/4"	2-1/2"	2-5/8"	3-1/16"	4-9/16"	3-7/8"	7/16"
656-3041J	3-5/8"	3-3/8"	2-1/4"	3-1/16"	4-9/16"	4"	27/64"
25-4041J	2-1/4"	2-1/16"	3-13/16"	4-1/16"	6"	4-7/8"	15/32"
655-4041J	2-3/4"	2-1/2"	3-5/8"	4-1/16"	6"	4-7/8"	7/16"
656-4041J	3-5/8"	3-3/8"	3-1/4"	4-1/16"	6"	5"	27/64"
25-5041J	2-1/4"	2-1/16"	4-13/16"	5-1/16"	7-1/4"	5-7/8"	15/32"
655-5041J	2-3/4"	2-1/2"	4-5/8"	5-1/16"	7-1/4"	5-7/8"	7/16"
656-5041J	3-5/8"	3-3/8"	4-1/4"	5-1/16"	7-1/4"	6"	27/64"

25-2041J

Dial Indicators

25, 655 Metric Dial Indicators with Long Range

50-125MM RANGES

These indicators have a shockless, hardened steel gear train and are furnished with jewel bearings and lug-on-center backs unless otherwise ordered.

- Conforms to AGD specifications except for range
- Furnished with continuous reading double dial
- Direct readout accomplished by (1) graduated top tube which indicates each 10mm of spindle travel, (2) revolution counter which indicates each 1mm full turn of the indicator hand, and (3) indicator hand which shows each 0.01mm of spindle movement

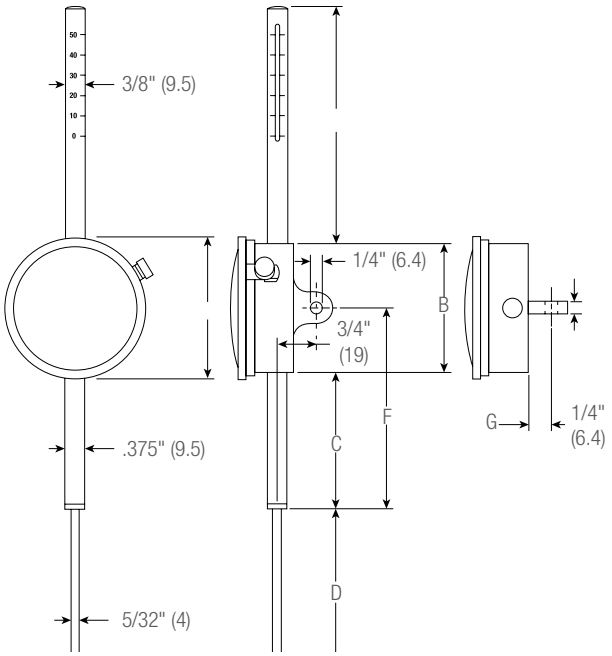

25, 655 Metric Dial Indicators with Long Range

Cat. No.	EDP	Graduation	AGD Group	Stem Diameter	Range	Dial Reading	Revs. of Hand
25-2081J	56225	0.01mm	2	.375" (9.5mm)	50mm	0-100	50
655-2081J	56230		3				
25-3081J	56226	0.01mm	2	.375" (9.5mm)	75mm	0-100	75
655-3081J	56231		3				
25-4081J	56227	0.01mm	2	.375" (9.5mm)	100mm	0-100	100
655-4081J	56232		3				
25-5081J	56228	0.01mm	2	.375" (9.5mm)	125mm	0-100	125
655-5081J	56233		3				

Not available with special non-shock mechanism. For contact points, attachments and accessories, refer to the end of the AGD Dial Indicator listings.

Approximate Dimensions Inch and Millimeter

Cat. No.	A	B	C	D	E	F	G
25-2081J	2-1/4" (57mm)	2-1/16" (52mm)	1-13/16" (46mm)	2-1/16" (52mm)	3-3/32" (79mm)	2-7/8" (73mm)	15/32" (12mm)
655-2081J	2-3/4" (70mm)	2-1/2" (63.5mm)	1-5/8" (41mm)	2-1/16" (52mm)	3-3/32" (79mm)	2-7/8" (73mm)	7/16" (11mm)
25-3081J	2-1/4" (57mm)	2-1/16" (52mm)	2-13/16" (71mm)	3-1/16" (78mm)	4-9/16" (116mm)	3-7/8" (98mm)	15/32" (12mm)
655-3081J	2-3/4" (70mm)	2-1/2" (63.5mm)	2-5/8" (67mm)	3-1/16" (78mm)	4-9/16" (116mm)	3-7/8" (98mm)	7/16" (11mm)
25-4081J	2-1/4" (57mm)	2-1/16" (52mm)	3-13/16" (81mm)	4-1/16" (103mm)	5-61/64" (151mm)	4-7/8" (124mm)	15/32" (12mm)
655-4081J	2-3/4" (70mm)	2-1/2" (63.5mm)	3-5/8" (92mm)	4-1/16" (103mm)	5-61/64" (151mm)	4-7/8" (124mm)	7/16" (11mm)
25-5081J	2-1/4" (57mm)	2-1/16" (52mm)	4-13/16" (122mm)	5-1/16" (129mm)	7-1/4" (184mm)	5-7/8" (149mm)	15/32" (12mm)
655-5081J	2-3/4" (70mm)	2-1/2" (63.5mm)	4-5/8" (117.5mm)	5-1/16" (129mm)	7-1/4" (184mm)	5-7/8" (149mm)	7/16" (11mm)

655-2081J

Dial Indicators

656 Dial Indicators with Extra Long Range

AGD GROUP 4

6-12" RANGES

These indicators have a shockless, hardened steel gear train and are furnished with jewel bearings and lug-on-center backs unless otherwise ordered.

- Use anywhere a long reach is needed – positioning of stops, measuring travel of slides and cam throws, and use in deep slots or holes
- Conforms to AGD specifications except for range, stems and contact point
- Top stem graduated in 1" increments, called out by red colored pointer
- Furnished with continuous reading double dial with direct reading count hand

656 Dial Indicators with Extra-Long Range

Cat. No.	EDP	Graduation	AGD Group	Dial Diameter	Range	Dial Reading	Revs. of Hand
656-6041J	53803				6.000"		60
656-7041J	53804				7.000"		70
656-8041J	53805				8.000"		80
656-9041J	53806	.001"	4	3-5/8"	9.000"	0-100	90
656-10041J	53807				10.000"		100
656-11041J	53808				11.000"		110
656-12041J	53809				12.000"		120

Not available with special non-shock mechanism. For contact points, attachments and accessories, refer to the end of the AGD Dial Indicator Section

Dimensions

Cat. No.	A	B	C	D
656-6041J	5-1/4"	6-1/16"	8-3/4"	6-15/16"
656-7041J	6-1/4"	7-1/16"	9-3/4"	7-15/16"
656-8041J	7-1/4"	8-1/16"	10-3/4"	8-15/16"
656-9041J	8-1/4"	9-1/16"	11-3/4"	9-15/16"
656-10041J	9-1/4"	10-1/16"	12-3/4"	10-15/16"
656-11041J	10-1/4"	11-1/16"	13-3/4"	11-15/16"
656-12041J	11-1/4"	12-1/16"	14-3/4"	12-15/16"

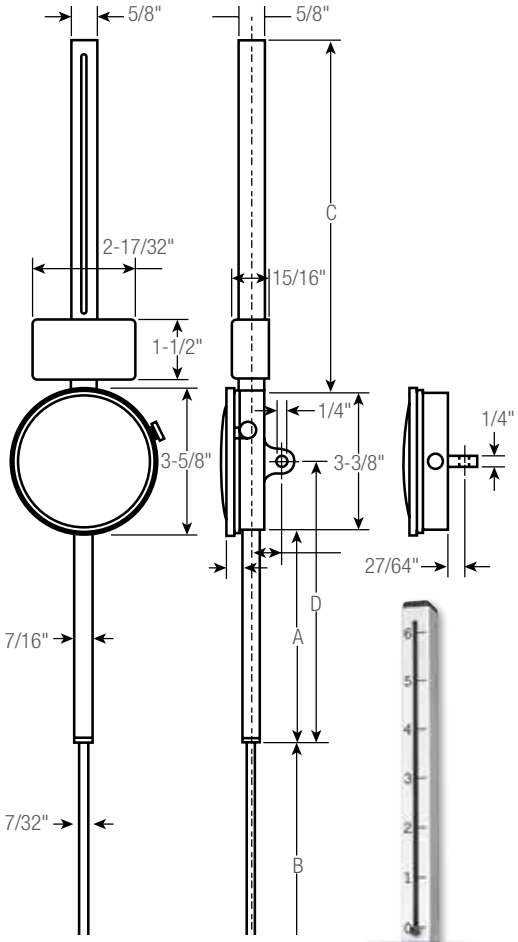

656-6041J

Indicator Backs

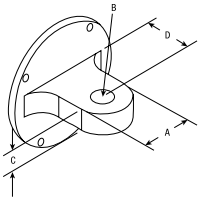

Lug-On-Center

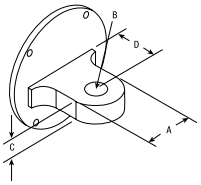

Lug-Off-Center

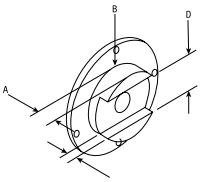

Adjustable Bracket

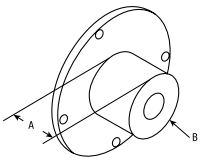

Screw-Type Lug

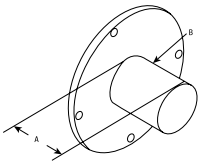

Post-Type Lug

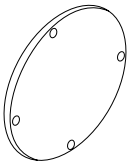
Flat

AGD Dial Indicator Backs

Part No.	EDP	Dimensions A in	A mm	B in	B mm	C in	C mm	D in	D mm	Type	Fits Starrett Indicator Models
PT06836-1 PT07206-1 PT06966-1 PT07317-1	70856 70960 70888 70980	5/8	16	1/4	6.3	1/4	6.3	1/2 15/32 7/16 27/64	12.7 12 11 10.7	Lug-On-Center*	81 25, 2600 655 656
PT06836 PT06608-1 PT06966A PT07317A	70855 70770 71996 71997	5/8	16	1/4	6.3	1/4	6.3	1/2 15/32 7/16 27/64	12.7 12 11 10.7	Lug-Off-Center**	81 25, 2600 655 656
PT06836M	70859	1/4	6.3	7/8	22	1/8	3	1/2	12.7	Adjustable Bracket (#1/4-20 Thread)†	81
PT06608M PT06878M PT06903M	70776 70874 70882	1/4	6.3	1-1/4	32	1/8	3	1/2	12.7	Adjustable Bracket (#1/4-20 Thread)†	25, 2600 655 656
PT24074 PT24076 PT24078 PT24080	72482 72483 72484 72485	1/2	12.7	5/8	16					Screw-Type Lug (#1/4-20 Thread)†	81 25, 2600 655 656
PT06836S PT06608E PT06878E PT06903E	72223 70772 72224 72225	1/2	12.7	5/8	16					Screw-Type Lug (#3/8-24 Thread)†	81 25, 2600 655 656
PT24073 PT24075 PT24077 PT24079	72486 72487 72488 72489	1/2	12.7	5/8	16					Screw-Type Lug (#1/4-28 Thread)†	81 25, 2600 655 656
PT06836F PT06608F PT06878F PT06903F	70857 70773 71992 71994	1-1/4	32	1/2	12.7					Post-Type Lug†	81 25, 2600 655 656
PT06836J PT06608J PT06878J PT06903J	70858 70774 70873 71995									Flat**	81 25, 2600 655 656
PT24921 PT26160	67295 67405									Flat (Plastic)	81 25, 2600

* Regularly furnished on all listed indicators at no extra charge.
** When specified, available on all listed indicators at no extra charge.
† When specified, available at extra charge on all listed indicators. Backs for special requirements are also available; priced on application.

Dial Indicators

647 Dial Comparator Indicators

The 647 Dial Comparator Indicators offer a high degree of security and precision. They are based on a solid and well thought-out construction taking into account the latest technology. They are manufactured by the most up-to-date methods.

647 and 647M Dial Comparator Indicators				
Cat. No.	**EDP**	**Range**	**Graduation**	**Dial Reading**
647	00001	.004"	.00005"	20-0-20
647M	00002	0.1mm	0.001mm	50-0-50

647 and 647M Dial Comparator Indicator Accessories		
Part No.	**EDP**	**Description**
PT15052	00537	Lug-on-center back
PT15053	00538	Lift cable

Features and Specifications

- Effective non-shock mechanism
- Pinions and shafts of the movement are jeweled
- After removal of the safety cap and adjustment screw on top of the case allows simple and safe zero setting of the instrument over the total measuring range
- A safety cap prevents unintentional turning of the fine adjustment screws
- Stem and spindle are made of hardened stainless steel
- The measuring spindles are very sensitive on account of their accurate guides
- Additional overtravel assists with the insertion of work pieces into the measuring device
- The clear scale is shadow free
- The red tolerance markers are easy to recognize and to set
- Furnish with flat back

647

647M

Indicator Backs

Special Indicator Backs

674 Backs with Adjustable Mounting Bracket

For use with gages and gaging fixtures where an adjustable indicator mounting is required. A dovetail with rack and pinion adjustment provides 1-1/8" (28mm) indicator travel. A 1/8" hex wrench is used to adjust and lock the indicator in final position. The bracket has two counter-bored mounting holes (for 1/4" socket head screws), and the back has four screw holes so the indicator back can be rotated.

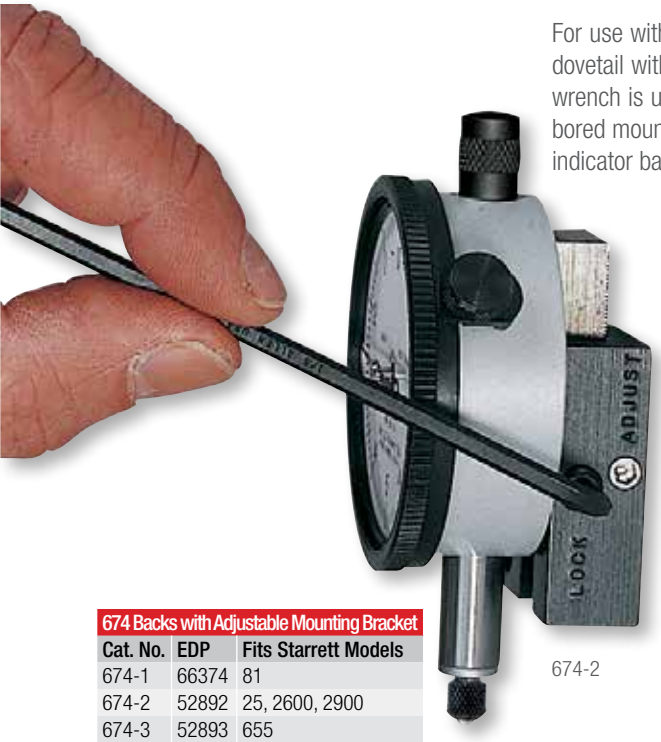

674-2

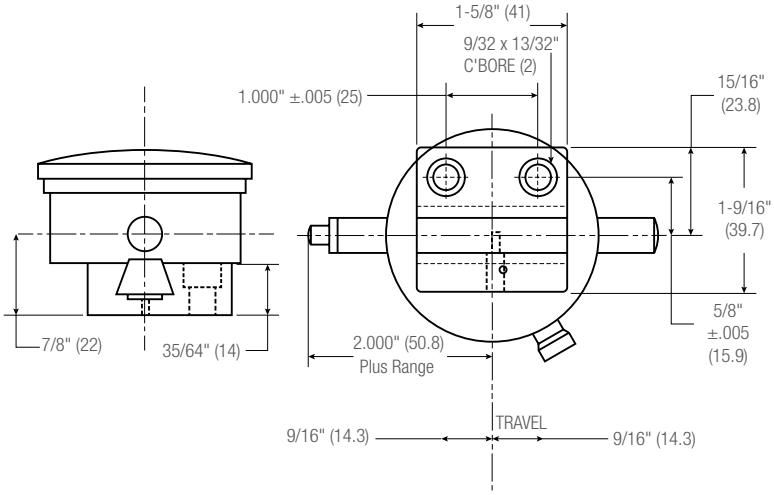

674 Backs with Adjustable Mounting Bracket		
Cat. No.	EDP	Fits Starrett Models
674-1	66374	81
674-2	52892	25, 2600, 2900
674-3	52893	655
674-4	52894	656

676 Magnetic Backs

These magnetic backs provide a quick and easy means of attaching any Starrett AGD indicator to flat, ferrous metal surfaces. A real time-saver for machine, jig and fixture set up. Requires no clamps, rods or snugs. A special 5/16"-24 threaded stud back is provided to replace the standard lug back. The powerful, permanent magnet is then attached to the threaded stud. Anti-magnetic indicators are not required.

676 Magnetic Backs		
Cat. No.	EDP	Fits Starrett Models
676-1	56647	81
676-2	56648	25, 2600, 2900
676-3	56649	655
676-4	56650	656

676-2

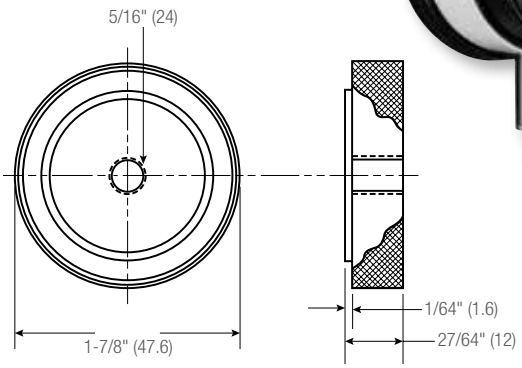

672 Universal Backs

Featuring a universal ball joint attached to the end of a gooseneck shank, these attachments make it possible to position an AGD indicator at any desired setting. The indicator can be rotated 360º and angularly up to 90º and locked in the desired position by tightening a single knurled nut. Straight shank is 3/8" (9.5mm) in diameter.

672 Universal Backs		
Cat. No.	EDP	Fits Starrett Models
672-2	52887	25, 2600, 2900
672-3	52888	655
672-4	52889	656

672-2

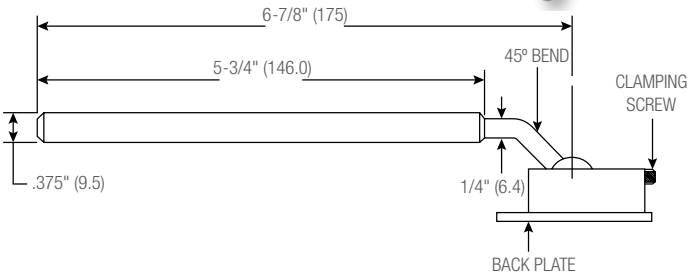

Indicator Accessories

AGD Indicator Attachments and Accessories

670 Indicator Hole Attachment

These hole attachments make it possible to measure the inside of holes and other surfaces that cannot be reached with the regular indicator spindle. Both attachments have a .375" (9.5mm) diameter hole to fit all indicators made to AGD standards and can be securely clamped to the indicator stem. The ball end on the swivel arm which contacts the work is 1/8" (3mm) in diameter.

670 Indicator Hole Attachment

		Range (Approx.)		For Hole Depths to:	
Cat. No.	EDP	in	mm	in	mm
670A	52884	3/8	9.5	13/16	20
670B	52724	9/16	14.3	1-11/16	42

671 Universal Attachment

This Universal Attachment is for use with indicators having standard AGD .375" (9.5mm) stem diameters. It clamps on the indicator stem and its movement is transmitted through the contact point to the indicator. Furnished with two interchangeable arms, one straight for measuring internal surfaces and one angular for measuring at right angles to the indicator spindle.

671 Universal Attachment

		Range (Approx.)	
Cat. No.	EDP	in	mm
671	52886	1/8	3

670A

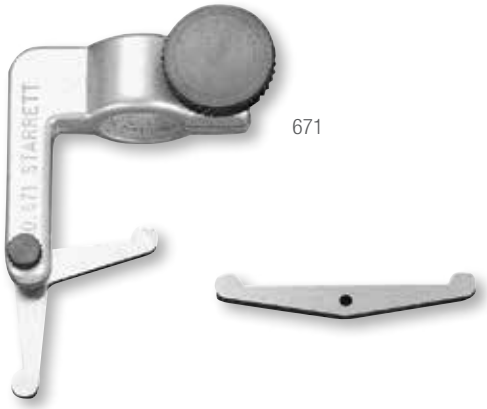

671

Special Non-Shock Mechanism

Starrett dial indicators have hardened, stainless steel gears, pinions and racks for maximum resistance to shock. Where the rack is subject to repeated, severe and/or excessive mechanical shocks, many Starrett AGD dial indicators may be ordered with a special non-shock mechanism. Based on a positive-loaded, split gear assembly, this simple device protects indicator accuracy, prolongs life, and reduces service costs.

When ordering, specify "N/S" after the dial indicator catalog number.

The following indicators are not available with non-shock mechanism: 25-109, 25-209, 2600 and 2700 Indicators; 656-109, 656-209 and all other indicators with 2" (50mm) range and above.

25-111JNS with Special Non-Shock Mechanism

Indicator Accessories

AGD Indicator Contact Points and Accessories

Any of the contact points listed here can also be used with the 650 and 651 Indicators and with the 196 Indicators by using the 196R Adapter.

Extra-Length Regular-Style Contact Points with round or flat ends

1/4-4"/6-100MM

All Starrett AGD indicators are regularly furnished with 1/4" (6.4mm) length interchangeable contact points. Available in standard lengths to 4" (100mm). Diameter is 13/64" (5mm), with a #4-48 screw thread. Made from high grade steel, hardened and ground. Other lengths are also available priced on application. Available with round or flat ends as listed.

Regular-Style Carbide Contact Points with round or flat end

Two round points are available in standard lengths. 1/4" (6.3mm), PT08399-X (EDP 66053) – or – 1/2" (13mm), PT06677-X (EDP 66054). One flat point is available in standard length; 1/4" (6.3mm), PT10453-X (EDP 66068). Interchangeable points have a #4-48 screw thread. Longer lengths can be easily obtained by adding contact point extensions (see next page). Other sizes also available by request.

Extra-Length Contact Points, Regular Style

Rounded End		Flat End		Length	
Part No.	EDP	Part No.	EDP	in	mm
PT07215	70965	PT10453	72048	1/4	6.4
PT01761	75263				
PT06677	70823	PT09560	71260	1/2	13
PT06677A	70824	PT09560A	71261	3/4	19
PT06677B	70825	PT09560B	71262	1	25
PT06677C	70826	PT09560C	71263	1-1/4	32
PT06677D	70827	PT09560D	71264	1-1/2	38
PT06677E	70828	PT09560E	71265	1-3/4	44
PT06677F	70829	PT09560F	71266	2	50
PT06677G	70830	PT09560G	71267	2-1/4	57
PT06677H	70831	PT09560H	71268	2-1/2	63
PT06677J	70832	PT09560J	71269	2-3/4	70
PT06677K	70833	PT09560K	71270	3	75
PT10459	71327			4	100

28 Shock Absorbing Anvil

Anvil replaces the regular contact point on any AGD indicator, protecting its movement against mechanical shock. Any sudden impact telescopes the anvil into the body of the unit against an internal spring. Acts as a solid contact point when the indicator is used normally. Furnished with #4-48 AGD standard screw thread.

Shock Absorbing Anvil

Cat. No.	EDP
28	50199

Flat-End Steel Points

The flat-end contact points have hardened steel contact surfaces, ground flat and lapped. They are furnished with a #4-48 screw thread for use on any AGD Indicator.

Flat-End Steel Points

		Diameter		
Part No.	EDP	in	mm	Style No.
PT06632-17	70804	1/4	6.4	17
PT06632-18	70805	3/8	9.5	18
PT06632-19	70806	1/2	12.7	19
PT06632-20	70808	3/4	19	20
PT06632-21	70807	1	25	21

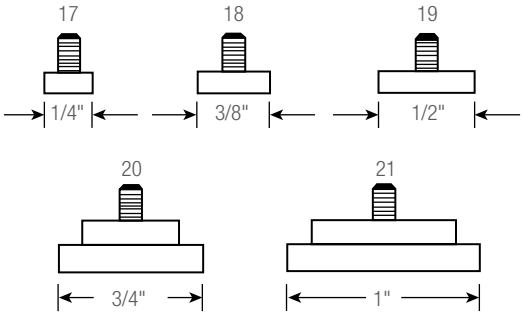

Indicator Accessories

AGD Indicator Special Contact Points and Accessories

Special Form Contact Points

Starrett Special Contact Points are furnished in fourteen shapes. Knurled diameter is approximately 13/64" (5mm). All have #4-48 screw thread and can be used on any AGD indicator. Other special shapes are available on special order.

Carbide, sapphire, diamond or teflon-coated contact points are also available by request.

25W Roller Contact Point

This contact has a small, hardened roller 3/8" (9.5mm) in diameter for continuous gaging of moving material where the material movement is at a slow speed. Contact has #4-48 screw thread and substitutes for the regular contact point provided on Starrett and other AGD indicators. Furnished with a knurled check nut for positioning the contact on the indicator spindle. See drawing (right).

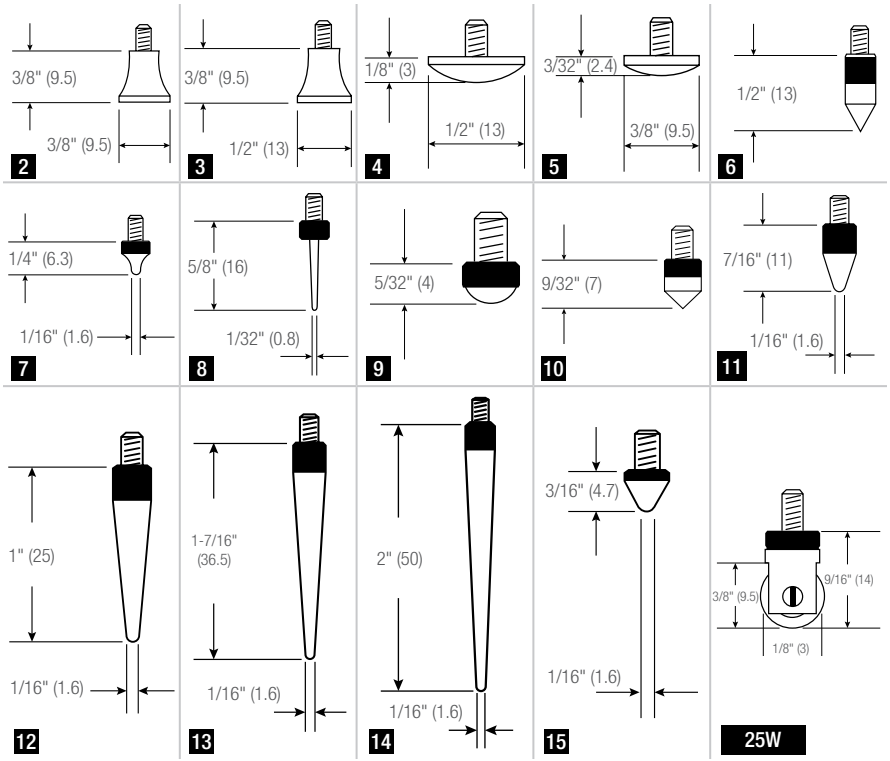

AGD Contact Adapters

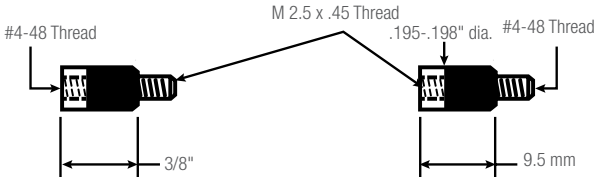

From Metric Racks to Inch Contacts
PT24728

From Inch Racks to Metric Contacts
PT24729

AGD Contact Point Extensions

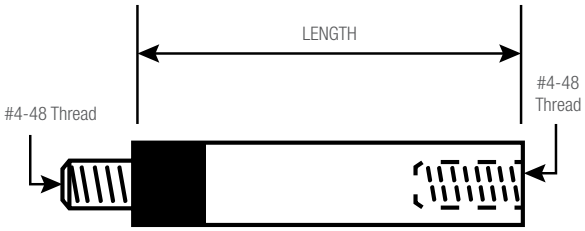

AGD Contact Point Extensions		
Part No.	EDP	Length
PT21697-1/2	64632	1/2"
PT21697-1	64633	1"
PT21697-2	64634	2"
PT21697-3	64635	3"
PT21697-4	64636	4"

25R Contact Point Set

14 points with #4-48 screw thread to fit AGD indicators: a regular 1/4" (6.3mm) long point; 9 special form points; a 28 Shock Absorbing Anvil; and 3 extra long points 1/2", 3/4" and 1" (13, 19, 25mm) long. High grade steel, hardened and ground. All points are mounted on a convenient aluminum ring for safe keeping and easy selection.

Contact Points		
Style No.	Part No.	EDP
2	PT06632-2	70790
3	PT06632-3	70791
4	PT06632-4	70792
5	PT06632-5	70793
6	PT06632-6	70794
7	PT06632-7	70795
8	PT06632-8	70796
9	PT06632-9	70797
10	PT06632-10	70798
11	PT06632-11	70799
12	PT06632-12	70800
13	PT06632-13	70801
14	PT06632-14	70802
15	PT06632-15	70803
	25W	53916
	25R	50153
	PT24728	64963
	PT24729	64964

Indicator Accessories

AGD Indicator Accessories

25SC Split Collets

ENGLISH AND METRIC THREADS

For mounting AGD Indicators with 3/8" (9.5 mm) or 8 mm stems in gaging and work location fixtures, these collets simplify fixture mounting. Screw the collet into the fixture or into our 648 Depth Gage Base, insert the indicator into the collet and tighten it in place with the hexagonal nut. Internal collet fingers grip the stem with equal pressure to eliminate spindle binding. Made of steel with black finish. Overall length of collet and threads is 1".

25SC14

25SC38

25SC Split Collets English Thread				
Cat. No.	**EDP**	**Thread Size**	**Thread Length**	**Hole for Indicator Stem**
25SC14	50155	3/8-24NF	9/32" (7mm)	.375" (9.5mm) Diameter to 1/2" (12.7mm) depth; 1/4" (6.3mm) Diameter through hole
25SC38	50156	1/2-20NF		.375" (9.5mm) Diameter through hole
25SC38B	55995	1/2-32UN		.375" (9.5mm) Diameter through hole
25SC Split Collets Metric Thread				
Cat. No.	**EDP**	**Thread Size**	**Thread Length**	**Hole for Indicator Stem**
25SC8M	64885	M12 x 1.75	7mm	8mm Diameter through hole

Split Bushing Attachment

Split Bushings

Split bushings fit over the indicator stem to increase the overall diameter for mounting in fixtures.

Split Bushings for 80 Miniature Dial Indicators				
			Diameter	
Cat. No.	**EDP**	**Length**	**Inside**	**Outside**
80SB	56008	1/2"	.219"	.375"
Split Bushings for AGD English Indicators				
			Diameter	
Cat. No.	**EDP**	**Length**	**Inside**	**Outside**
25SB	50154	1/2"	.375"	.500"
Split Bushings for AGD Metric Indicators				
			Diameter	
Cat. No.	**EDP**	**Length**	**Inside**	**Outside**
25MSB	56007	12.7mm	8mm	9.5mm

Threaded Stems

Threaded stems on Starrett indicators with a .375" (9.5mm diameter stem up to 1" (25mm) range (except long stem models) are available at additional cost. A threaded stem is often desirable for attaching the indicator to machine tools or fixtures. A 3/8-24 thread is furnished unless otherwise specified.

Threaded Stem Attachment

648 Depth Gage Bases with Stem Collet

Depth gage base with 25SC38 Stem Collet to fit 3/8" (9.5mm) stem dia. (as per AGD). Split bushings for adapting stem diameter are available but not included.

648 Depth Gage Bases with Stem Collet			
		Base Size	
Cat. No.	**EDP**	**in**	**mm**
648-4	65850	4	100
648-6	65851	6	150
648-8	65852	8	200

25LC Range Limit Cap

The Range Limit Cap replaces the stem cap furnished on most 81, 25, 2600, 655 and 656 AGD Indicators, preventing the possible error of a complete revolution. It can be adjusted to limit an indicator's measuring range any amount up to 3/8" (9.5mm).

25LC Range Limit Cap	
Part No.	**EDP**
25LC	50152

Stem Collet

Long Stem Dial Indicators

Starrett 81, 25, 2600, 655 and 656 Indicators through the 1" (25mm) range can be furnished with long stems up to 12" (300mm). These are especially useful for gaging in deep holes or where obstructions prevent the use of regular indicators. Specify stem length from outside case diameter when ordering.

Long stems not available on 80 Miniature Dial Indicators.

Range Limit Cap

Indicator Accessories

Top Lift

Dust Guard

AGD Indicator Accessories

Top Lift

A knurled grip allows the spindle to be manually lifted and returned by spring action to contact the work. Furnished in place of the stem cap on .500", 1.000", 10mm and 25mm range indicators. No extra charge on AGD Indicators up to 1" (25mm) range; over 1" (25mm) range, priced on request. To order, specify "with Top Lift" after the indicator catalog number.

NOTE: Will not fit on 2700 Indicators.

Rubber Dust Guard

Protects the rack of AGD Indicators from foreign matter under adverse gaging conditions. Made in lengths to fit 81, 25, 2600, 655 and 656 Indicators up to 1" (25mm) range.

Rubber Dust Guard		
Part No.	**EDP**	**Indicator Range**
PT09545	71256	.400", .500", 1.000" (10mm, 12.7mm, 25mm)
PT09763	71289	Ranges under .400" (10mm)

AGD Dial Indicator Tolerance Hands

Starrett dial indicators may be ordered with crystal-mounted or bezel-mounted tolerance hands for visually checking limits of a given dimension.

Crystal-mounted hands, both colored red, are positioned under the crystal and are individually adjustable through 360º by turning concentric knurled knobs on the outside of the crystal. Available for all 81, 25, 655 and 656 AGD Dial Indicators.

Bezel-mounted hands, both colored red, rotate inside the bezel. They are mounted outside the crystal and are independently adjustable through 360º. Available for 81 and 25 AGD Indicators only.

Snap-on bezel-mounted hands, two hands colored red, are easily mounted on the outside of the bezel and are adjustable through 360º. Available for 25 AGD Indicators only. Order PT99513 (EDP 66038).

Indicators with snap-on bezel-mounted hands (left), crystal-mounted hands (above), and bezel-mounted hands (right).

Maximum Hand

This red-colored hand records the maximum position reached by the indicator hand within a single revolution. Mounted under the crystal, it has a small nib at its point. The indicator hand contacts the nib, advancing the maximum hand which remains in position when the indicator hand returns to its at-rest position. To reset the maximum hand, turn the knurled knob mounted outside the crystal.

To order Tolerance or Maximum Hands, specify the indicator catalog number followed by the type of hand desired.

Maximum Hand in at-rest position with indicator hand (left), and in recording position (right).

Lever Control

Handy attachment mounts in place of stem cap and is interchangeable on most Starrett 81, 25, 2600, 655 and 656 AGD Indicators up to 1" or 25mm range. Pressing down lever lifts spindle; releasing it lets spindle contact the work. Easy to install in the left or right hand position using a screwdriver and an open end wrench. If ordered on a new indicator, specify left or right hand position. (Furnished at left unless otherwise ordered.)

NOTE: Fits only indicators with a case stem cap.

Lever Control	
Part No.	**EDP**
PT99356	72088

Indicator Testers

716, 716M Indicator Testers

0-1"/0-25MM

With direct reading capability to .0001" or 0.002mm, these gages provide a rapid means for calibrating both AGD and dial test indicators for linearity and repeatability through ranges up to 1" or 25mm. This tester design is unlike others because it can be swung to any position between vertical and horizontal by loosening a large hand knob which fastens the gage assembly to the base.

In addition, the micrometer head can be turned on its axis and its scale positioned to suit the operator's convenience by loosening a single set screw. Tensioned locking screws prevent tipping of both the gage assembly and the indicator holding clamp during set-up and adjustment.

The micrometer head is our 469 super-precision head with reverse reading capability. When testing a 2700 or 2900 Electronic Indicator, a .000050" graduated head is advisable, available on special order.

An indicator mounting attachment holds dovetail mount indicators, AGD indicators with 3/8" (9.5mm) stems and indicators with a holder that has a 3/16" (4.7mm) shank. Unit also has a fine adjustment to zero the indicator.

716MX

716 Indicator Tester (0-1" Range)			
Cat. No.	**EDP**	**Micrometer Head Graduation***	**Description**
716X	67228	.0001"	Tester with carbide faced spindle, indicator mounting and offset attachment
716M Indicator Tester (0-25mm Range)			
Cat. No.	**EDP**	**Micrometer Head Graduation***	**Description**
716MX	67229	0.002mm	Tester with carbide faced spindle, indicator mounting and offset attachment
Accessory for 716, 716M Indicator Testers			
Cat. No.	**EDP**	**Description**	
PT26009	65102	Indicator mounting attachment only	

*Available on special order with resolution to .000050" or 0.001mm.

Dial test indicator held in place by an offset attachment

Checking AGD dial indicator

NEW!

Electronic Indicators

2900 Electronic Indicators

RANGES FROM .5" (12MM) TO 2" (50MM)
AGD GROUP 2

The 2900 Electronic Indicators are available in a choice of configurations to meet a range of requirements. Innovative True Absolute Sensor Technology minimizes the chance of data loss for exceptional reliability. Built with IP67 protection and renowned Starrett quality, they maintain their reliability in hostile shop environments.

Features

- Intuitive design and layout – easy to learn and use
- Positive, tactile-feel button activation
- Long battery life
- CE compliant
- Data output to SPC on all models
- Choice of Basic, Standard and Advanced feature levels
- Fixed ratio measurement systems available
- Compatible with 25 Indicator backs
- Origin set, zero set
- All compatible with 2900 SCM, SCU and SCKB cables
- Counting direction switching (±)

Inch/Metric -.375" Stem - #4-48 UNF Thread

		Range		Resolution		Accuracy		Additional Features									
Cat. No.	EDP	in	mm	in	mm	in	mm	in/mm Cnv.	Limit Set	Value Preset	Reading Hold	Selectable Res.	Ftr. Lock	Max/Min/Runout Value Holding	True Abs. Sensor Tech.	Lug On Ctr. Bck.	CR2032 Btry. (2)
2900-1	09980	.5	12	.00005	0.001	±.00012	±0.003	x							x	x	x
2900-2	09981	.5	12	.0001	0.002	±.00012	±0.003	x							x		
2900-4	09983	.5	12	.0005/.0001/.00005	0.01/0.001	±.00012	±0.003	x	x	x	x	x	x		x	x	x
2900-6	09985	.5	12	.0005/.0001/.00005	0.01/0.001	±.00012	±0.003	x	x	x	x	x	x	x	x	x	x
2900-1-1	09960	1	25	.00005	0.001	±.00012	±0.003	x							x	x	x
2900-2-1	09962	1	25	.0001	0.01	±.00012	±0.003	x							x		
2900-3-1	09963	1	25	.0005	0.01	±0.001	±0.03	x								x	x
2900-4-1	09965	1	25	.0005/.0001/.00005	0.01/0.001	±.00012	±0.003	x	x	x	x	x	x		x	x	x
2900-5-1	09967	1	25	.0005	0.01	±0.001	±0.03	x	x	x						x	x
2900-6-1	09969	1	25	.0005/.0001/.00005	0.01/0.001	±.00012	±0.003	x	x	x	x	x	x	x	x	x	x
2900-1-2	72676	2	50	.00005	0.001	±.00012	±0.003	x							x	x	x
2900-4-2	72677	2	50	.0005/.0001/.00005	0.01/0.001	±.00012	±0.003	x	x	x	x	x	x		x	x	x
2900-6-2	72678	2	50	.0005/.0001/.00005	0.01/0.001	±.00012	±0.003	x	x	x	x	x	x	x	x	x	x

Inch/Metric - 8mm Stem - M2.5 x 0.45 Thread

		Range		Resolution		Accuracy		Additional Features									
Cat. No.	EDP	in	mm	in	mm	in	mm	in/mm Cnv.	Limit Set	Value Preset	Reading Hold	Selectable Res.	Ftr. Lock	Max/Min/Runout Value Holding	True Abs. Sensor Tech.	Lug On Ctr. Bck.	CR2032 Btry. (2)
2900-1ME	09971	.5	12	.00005	0.001	±.00012	±0.003	x							x	x	x
2900-4ME	09976	.5	12	.0005/.0001/.00005	0.01/0.001	±.00012	±0.003	x	x	x	x	x	x		x	x	x
2900-6ME	09979	.5	12	.0005/.0001/.00005	0.01/0.001	±.00012	±0.003	x	x	x	x	x	x	x	x	x	x
2900-1ME-25	09972	1	25	.00005	0.001	±.00012	±0.003	x							x	x	x
2900-3ME-25	09975	1	25	.0005	0.01	±0.001	±0.03	x								x	x
2900-4ME-25	09977	1	25	.0005/.0001/.00005	0.01/0.001	±.00012	±0.003	x	x	x	x	x	x		x	x	x
2900-5ME-25	09978	1	25	.0005	0.01	±0.001	±0.03	x	x	x	x			x		x	x
2900-6ME-25	09991	1	25	.0005/.0001/.00005	0.01/0.001	±.00012	±0.003	x	x	x	x	x	x	x	x	x	x
2900-1ME-50	72679	2	50	.00005	0.001	±.00012	±0.003	x							x	x	x
2900-4ME-50	72681	2	50	.0005/.0001/.00005	0.01/0.001	±.00012	±0.003	x	x	x	x	x	x		x	x	x
2900-6ME-50	72683	2	50	.0005/.0001/.00005	0.01/0.001	±.00012	±0.003	x	x	x	x	x	x	x	x	x	x

Metric Only - 8mm Stem - M2.5 x 0.45 Thread

		Range		Resolution		Accuracy		Additional Features									
Cat. No.	EDP	in	mm	in	mm	in	mm	in/mm Cnv.	Limit Set	Value Preset	Reading Hold	Selectable Res.	Ftr. Lock	Max/Min/Runout Value Holding	True Abs. Sensor Tech.	Lug On Ctr. Bck.	CR2032 Btry. (2)
2900-1M	09986	.5	12		0.001		±0.003								x	x	x
2900-4M	09988	.5	12		0.01/0.001		±0.003		x	x	x	x	x		x	x	x
2900-6M	09990	.5	12		0.01/0.001		±0.003		x	x	x	x	x	x	x	x	x
2900-1M-25	09961	1	25		0.001		±0.003								x	x	x
2900-3M-25	09964	1	25		0.01		±0.03									x	x
2900-4M-25	09966	1	25		0.01/0.001		±0.003		x	x	x	x	x		x	x	x
2900-5M-25	09968	1	25		0.01		±0.03		x	x	x			x		x	x
2900-6M-25	09970	1	25		0.01/0.001		±0.003		x	x	x	x	x	x	x	x	x
2900-1M-50	72680	2	50		0.001		±0.003								x	x	x
2900-4M-50	72682	2	50		0.01/0.001		±0.003		x	x	x	x	x		x	x	x
2900-6M-50	72684	2	50		0.01/0.001		±0.003		x	x	x	x	x	x	x	x	x

*Fixed ratios available with special order. (exception of 2900-5M-25)

Electronic Indicators

2700 Backlight Electronic Indicators

The 2700 Backlight Electronic Indicators are offered in 1", 2" and 4" ranges. The deep backlight color indicates tolerances to read the indicator at far distances, in poor lighting, and with limited operator experience. A CD drive is required to use the software.

Cat. No.	EDP	Range	SPC Output	Accuracy	Resolution
2700-800	72758	1"	x	(±) 2. Res.	.0001"
2700-801	72759	1"	x	(±) 2. Res.	.000050"
2700-802	72760	2"	x	(±) 2. Res.	.0005"
2700-803	72761	2"	x	(±) 2. Res.	.0001"
2700-804	72762	4"	x	(±) 2. Res.	.0005"
2700-805	72763	4"	x	(±) 2. Res.	.0001"

Accessories, Power Source, Cables

Part No.	EDP	Description
PT60646	72592	Cable to SPC computer, not foot switch
2700SCKB	69891	USB cable to PC (In focused window), all 2700 Series
2700SCU	23956	USB Cable, all 2700 Series
2700SCM	69896	SmartCable Gage MUX - all 2700 Series

Backs/Lever*

Part No.	EDP	Description
PT26406	65886	Flat back
PT26407	65887	Offset lug back
PT26411	65891	Adjustable lug back
PT26408	65888	Adjustable back
PT26409	65889	Post-type back
PT26410	65890	Screw bracket back
PT26848	66293	Adjustable mounting bracket back
PT26405	65885	Lifting lever

*Other backs, styles and accessories also available by request.

Features

- Backlight relates a reading to tolerance values
- SPC Cables USB, MTI, RS232
- Inch/metric display
- Analog visual display
- Travel reverse
- Maximum reading hold
- Display/freeze hold
- Single gage simple data collection included
- Floating zero
- Minimum reading hold
- Abs./preset measuring mode
- T.I.R. with low and high storage recall
- Lock combination
- USB/AC power cable included
- Software included
- AC power source

Electronic Indicators

2700 Wisdom Electronic Indicators

The 2700 Wisdom Electronic Indicator is one of the most versatile of the electronic indicators. All indicators feature a glass scale design with an unsurpassed accuracy of ± two resolutions when measuring from a known standard. All have rugged, sealed enclosures as well.

Features

- 8 resolutions and 4 measuring ranges available
- Plus or minus travel direction
- Zero the tool at any position of the spindle
- Rotating bezel
- Auto Off after 10 minutes of non-use
- Three power sources - operate by battery, A/C adapter or through data port
- Output jack allows data transmission

F2730
with storage

F2740IQ

F2720AD

Inch/Metric - .375" Stem - #4-48 UNF Thread							
		Range		Resolution		Accuracy	
Cat. No.	EDP	in	mm	in	mm	in	mm
F2720IQ	49508	0.6	15	.001/.0005/.0001/.00005	0.02/0.01/0.002/0.001	±.0001	±0.002
F2720AD	49500	0.6	15	.001/.0005/.0001/.00005	0.02/0.01/0.002/0.001	±.0001	±0.002
F2720-1AD	00043	0.6	15	.001/.0005/.0001	0.02/0.01/0.002	±.0001	±0.002
F2730IQ	49509	1	25	.001/.0005/.0001/.00005	0.02/0.01/0.002/0.001	±.0001	±0.002
F2730-1IQ	49516	1	25	.001/.0005/.0001	0.02/0.01/0.002	±.0002	±0.004
F2730AD	49501	1	25	.001/.0005/.0001/.00005	0.02/0.01/0.002/0.001	±.0001	±0.002
F2730-1AD	00045	1	25	.001/.0005/.0001	0.02/0.01/0.002	±.0002	±0.004
F2740IQ	49510	2	50	.001/.0005/.0001	0.02/0.01/0.002	±.0002	±0.004
F2740AD	49502	2	50	.001/.0005/.0001	0.02/0.01/0.002	±.0002	±0.004
F2750IQ	49511	4	100	.001/.0005/.0001	0.02/0.01/0.002	±.0002	±0.004
F2750AD	49503	4	100	.001/.0005/.0001	0.02/0.01/0.002	±.0002	±0.004
Inch/Metric - 8mm Stem - M2.5 x 0.45 Thread							
		Range		Resolution		Accuracy	
Cat. No.	EDP	in	mm	in	mm	in	mm
F2720IQM	49512	0.6	15	.001/.0005/.0001/.00005	0.02/0.01/0.002/0.001	±.0001	±0.002
F2720ADM	49504	0.6	15	.001/.0005/.0001/.00005	0.02/0.01/0.002/0.001	±.0001	±0.002
F2720-1ADM	09993	0.6	15	.001/.0005/.0001	0.02/0.01/0.002	±.0002	±0.004
F2730IQM	49513	1	25	.001/.0005/.0001/.00005	0.02/0.01/0.002/0.001	±.0001	±0.002
F2730-1IQM	09992	1	25	.001/.0005/.0001	0.02/0.01/0.002	±.0002	±0.004
F2730ADM	49505	1	25	.001/.0005/.0001/.00005	0.02/0.01/0.002/0.001	±.0001	±0.002
F2730-1ADM	09994	1	25	.001/.0005/.0001	0.02/0.01/0.002	±.0002	±0.004
F2740IQM	49514	2	50	.001/.0005/.0001	0.02/0.01/0.002	±.0002	±0.004
F2740ADM	49506	2	50	.001/.0005/.0001	0.02/0.01/0.002	±.0002	±0.004
F2750IQM	49515	4	100	.001/.0005/.0001	0.02/0.01/0.002	±.0002	±0.004
F2750ADM	49507	4	100	.001/.0005/.0001	0.02/0.01/0.002	±.0002	±0.004

Electronic Indicators

.250"/6mm and .600"/15mm Models

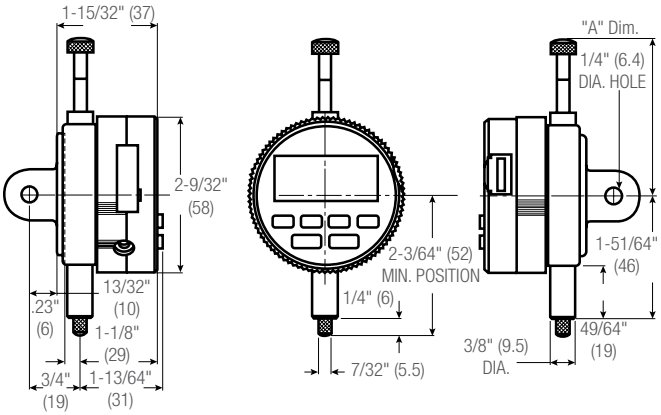

Travel		A Dimension	
in	mm	in	mm
.600	15	2-13/32	61
.250	6.4	2-1/16	52

1"/25mm Models

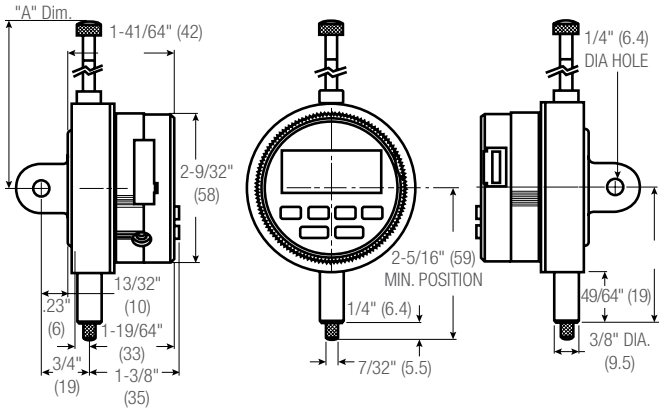

Travel		A Dimension	
in	mm	in	mm
1	25.4	2-7/8	73

2"/50 mm Models

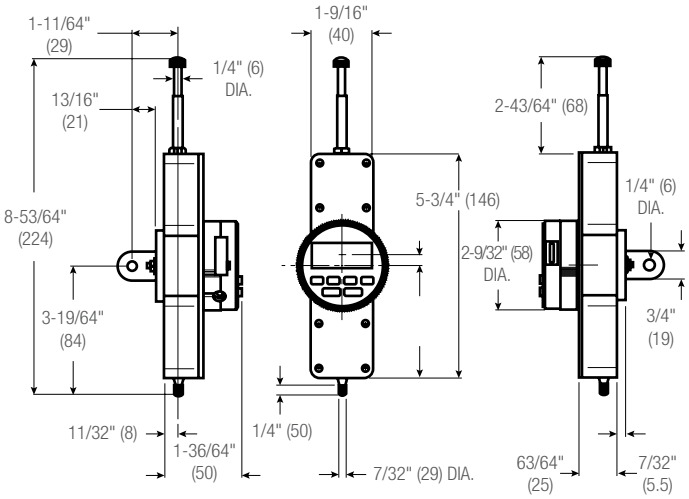

4"/100mm Models

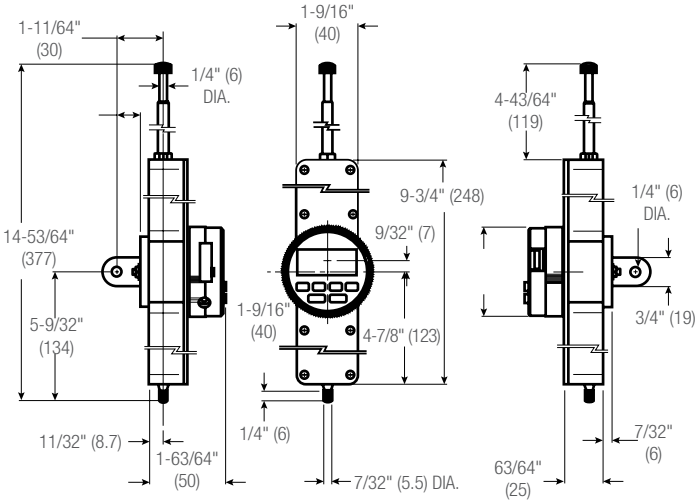

Accessories, Power Source, Cables		
Part No.	EDP	Description
PT26413	65880	A/C Adapter, 110-Volt
PT26404	65884	Replacement Zinc Air Batteries, 4-Pack
PT61120	65446	Replacement Battery, 1-Pack (req. 2)
PT61489	65904	Cable to Module PT61490, to Connect to 772 Data Collectors and 761 Multiplexers
PT26415	65882	Cable for Wisdom Indicator to Wisdom Remote Display
PT26441	65893	USB Cable to RS232 (PC/Compatible)
2700SCM	69896	7612 Data Multiplexer Gage Interface

Backs/Lever*		
Part No.	EDP	Description
PT26406	65886	Flat Back
PT26407	65887	Offset Lug Back
PT26411	65891	Adjustable Lug Back
PT26408	65888	Adjustable Back
PT26409	65889	Post-Type Back
PT26410	65890	Screw Bracket Back
PT26848	66293	Adjustable Mounting Bracket Back
PT26405	65885	Lifting Lever

* Other backs, styles and accessories also available by request. To order contact points individually, see previous pages.

Extension Cables		
Part No.	EDP	Description
PT05679	68752	6' Extension Cable
2700SCKB	69891	USB cable to PC (In focused window)

Backs/Lever*		
Part No.	EDP	Description
PT26406	65886	Flat Back
PT26407	65887	Offset Lug Back
PT26411	65891	Adjustable Lug Back
PT26408	65888	Adjustable Back
PT26409	65889	Post-Type Back
PT26410	65890	Screw Bracket Back
PT26848	66293	Adjustable Mounting Bracket Back
PT26405	65885	Lifting Lever

*Other backs, styles and accessories also available by request. To order contact points individually, see previous pages.
NOTE: Probe and display resolutions must be the same for accurate readings.

Electronic Indicators

2700 Group 1 Digital Indicators

AGD GROUP 1

Features

- 270 degree Rotating Bezel - Allows viewing at different attitudes
- Smaller Diameter - A dimensional match to AGD Group one mechanical indicators (1.700"/43mm)
- Two Available Displays - Single LCD Numeric IQ model (largest of its class) with low battery warning and programmable ratios or Numeric/Analog AD model showing its two displays simultaneously
- .400 travel
- Allows storage of 200 readings internally and viewed, stored readings can be downloaded with included software and USB style cable
- Easy wired communication with cables or using Starrett DataSure® wireless (contact Starrett)
- Long battery life (with one CR232 cell) 3,000 hours under typical use also can be powered by plugging into your computer

F2715AD

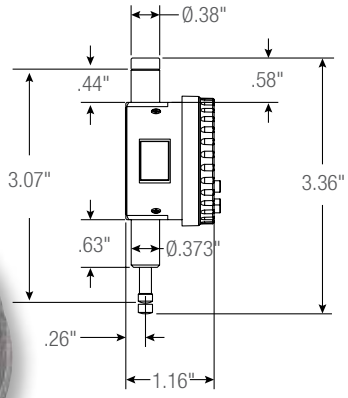

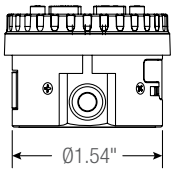

Inch/Metric - 8mm Stem - M2.5 x 0.45 Thread							
		Range		Resolution		Accuracy	
Cat. No.	EDP	in	mm	in	mm	in	mm
F2715IQ	72970	0.4	10	.001/.0005/.0001/.00005	0.02/0.01/0.002/0.001	±.0001	±0.002
F2715AD	72971	0.4	10	.001/.0005/.0001/.00005	0.02/0.01/0.002/0.001	±.0001	±0.002
F2714IQ	73273	0.4	10	.001/.0005/.0001	0.02/0.01/0.002	±.0001	±0.002
F2714AD	73274	0.4	10	.001/.0005/.0001	0.02/0.01/0.002	±.0001	±0.002

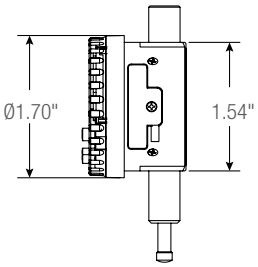

3900 Electronic Indicators

AGD GROUP 2

RANGES UP TO .500" AND 12.7MM

The 3900 Electronic Indicators have simple, powerful, easy-to-use functions, all at an attractive price. Versions are available for inch/metric and metric only.

Features

- Large, easy-to-read LCD
- Power On/Off button
- Reverse travel (± control indicates direction)
- Zero setting at any position
- Long battery life
- 3/8" diameter stem for inch/mm model (8mm on metric-only model)
- 4-48 spindle thread on inch/mm model (M2.5 X .45 thread on metric-only model)
- Lug-on-center back with additional flat back
- Dust cap
- Plastic storage case with clear cover

3900-5

		Range		Resolution		Accuracy	
Cat. No.	EDP	in	mm	in	mm	in	mm
3900-5	72538	.5	12.7	.0005	0.01	±0.001	±0.03
3900M-5	72537		12.7		0.01		±0.03

Accessory		
Cat. No.	EDP	Description
PT61918	67169	SR44 battery

Indicator Holders

3670 Dial Indicator Stands

The 3670 Dial Gage Stands are versatile and easily adapted to thickness gages for comparator work.

A perfect companion for the 647 Comparator Indicator.

Features

- Designed for comparison measurements using a dial indicator or digital indicator
- Vertical fine adjustment is standard on all models
- Rugged bracket holds indicator firmly in place
- Can be used with any A.G.D. dial or digital indicator
- Furnished with a serrated or flat anvil which is ground an lapped and removable

3670 Dial Gage Stands (3/8" stem hole; 8mm bushing)		
Cat. No.	EDP	Description
3671	69901	Indicator stand with round flat anvil
3672	69902	Indicator stand with round serrated anvil
3673	69903	Indicator stand with square serrated anvil

3671 with 647M
Comparator Indicator

3671

3672

3673

Indicator Holders

657 Indicator Holders

Base has three precision ground, magnetic contact surfaces. Grips horizontally, vertically or upside down. V-step holds base to round surfaces. Extra #1/4-20 tapped hole in one side of base (not shown) for mounting post.

Available with or without Starrett AGD Dial Indicators: inch reading 25-131J (graduation .0005", dial reading 0-25-0, range .125") or millimeter reading 25-181J (graduation 0.01mm, dial reading 0-50-0, range 2.5mm). Other indicators can be furnished on request.

A. 657P Magnetic Base. 1-15/16" x 1-5/8" x 1-7/8" (50 x 40 x 48mm) deep. Push button on/off switch for one-hand operation.

B. 657G Upright Base Post. 3/8" (9.5mm) diameter x 7-7/16" (190mm) length overall.

C. 657H Swivel Post Snug. Allows universal indicator adjustment – up-and-down, any vertical angle, for a complete 360º. Two 3/8" (9.5mm) holes.

D. PT06784-A Gage Holding Rod. 3/8" x 9-1/2" (9.5 x 240mm) with clamping mechanism for gripping the indicator lug back (see photo below).

E. F. 57S and 58S Universal Snugs. Adapt various scribers and indicator shanks to rods and posts.

657 Base Holder Assembly and Individual Components

Photo Key	Cat. No.	EDP	Description
	657D	52749	Magnetic Base, Upright Post Assembly Including Post, Swivel Post Snug and Gage Holding Rod
A	657P	52757	Magnetic Base Only
B	657G	52753	Upright Base Post Only
C	657H	52785	Swivel Post Snug Only
D	PT06784-A	52755	Gage Holding Rod with Clamp Mechanism
E	57S	50296	Universal Snug with 5/16" and 3/8" Hole Dia.
F	58S	56613	Universal Snug with 1/4", 5/16" and 3/8" Hole Dia.

Sets Including Magnetic Base, Upright Post Assembly and AGD Dial Indicators

w/Finished Wood Case		Without Case		
Cat. No.	EDP	Cat. No.	EDP	Description
657EZ	52751	657E	52750	Base and Upright Post Assembly with Inch Reading Indicator 25-131J
657MEZ	56358	657ME	56357	Base and Upright Post Assembly with Millimeter Reading Indicator 25-181J

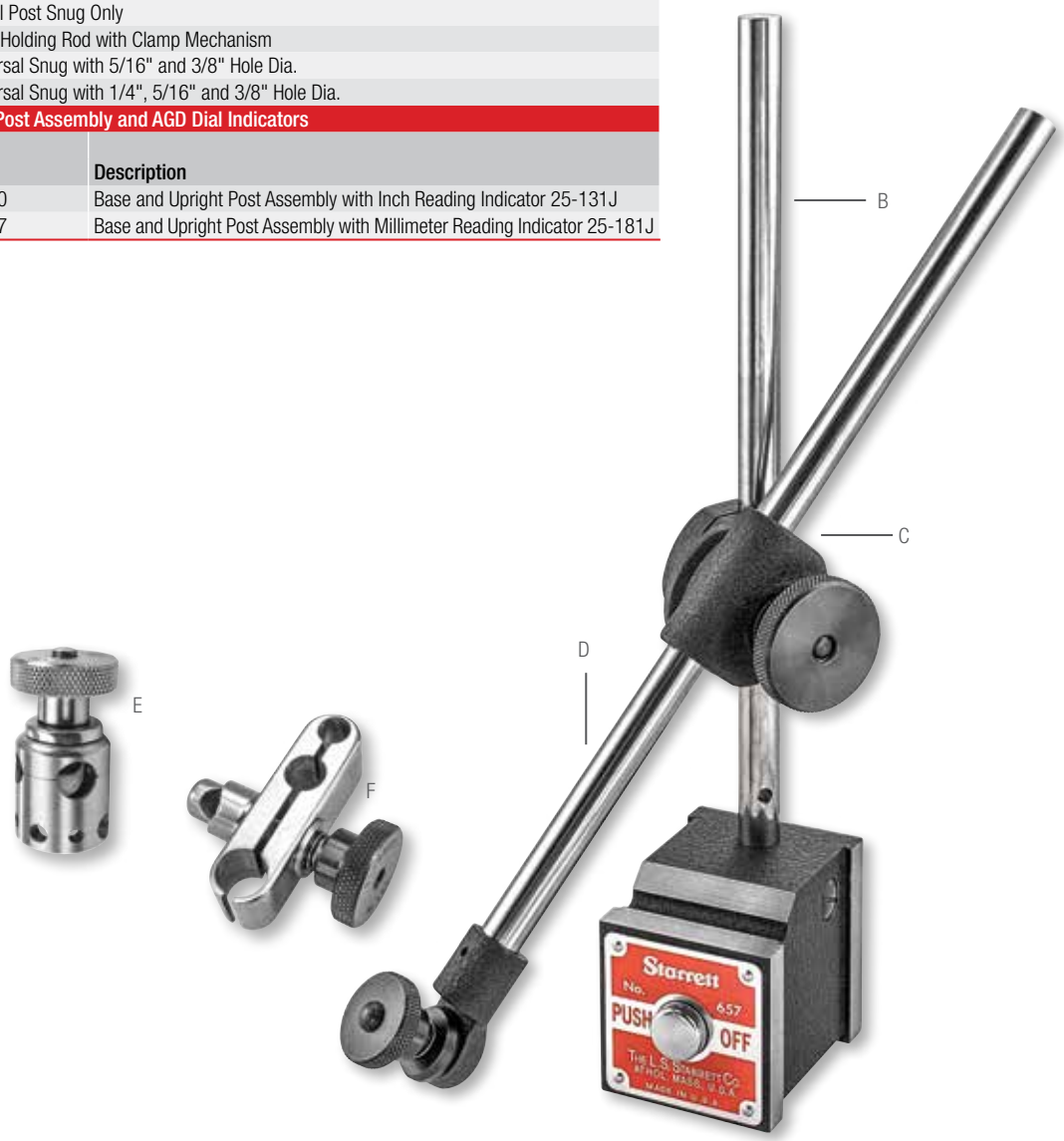

Indicator Holders

657AA Magnetic Base Indicator Holder

For use with all Starrett Test, Back-Plunger, AGD, Dial and Miniature-Dial Indicators. Also accommodates similar indicators of other manufacturers.

A. 657P Magnetic Base. 1-15/16 x 1-5/8 x 1-7/8" (50 x 40 x 48mm). Push-button on/off switch for one-hand operation. Base has three precision ground magnetic contact points. Grips horizontally, vertically, and upside down. V-step holds base to arbors, shafts, etc. Base has extra 1/4-20 tapped hole on one side for mounting post. Black wrinkle finish on non-working surfaces.

B. 657G Upright Base Post. 3/8" (9.5mm) diameter x 7-7/16" (190mm) length overall. 57S and 58S Universal Snugs may also be used.

C. 657S Snug. Two 1/4" (6.3mm) diameter holes. Adapts 196, 650, and 651 Dial Indicators and 657Y Indicator Attachment to 657X Rod.

D. 657X Rod. 1/4" (6.3mm) diameter x 6" (150mm) long. Accommodates Starrett 708, 709, 811 and 711F Dial Test Indicators and 657S Sleeve.

E. 657Y Indicator Attachment. 1/4" (6.3mm) O.D. one end, other end threaded and fits lug backs of all AGD indicators (81, 25, 655, 656) and 80 Miniature Indicators.

F. PT18724 Snug. 3/8" (9.5mm) diameter post hole. 1/4" (6.3mm) diameter gripping hole accommodates 657X Rod.

657Y with lug-on-center back

657AA with 196B1 Universal Dial Indicator

657AA with 711FS Last Word® Dial Test Indicator

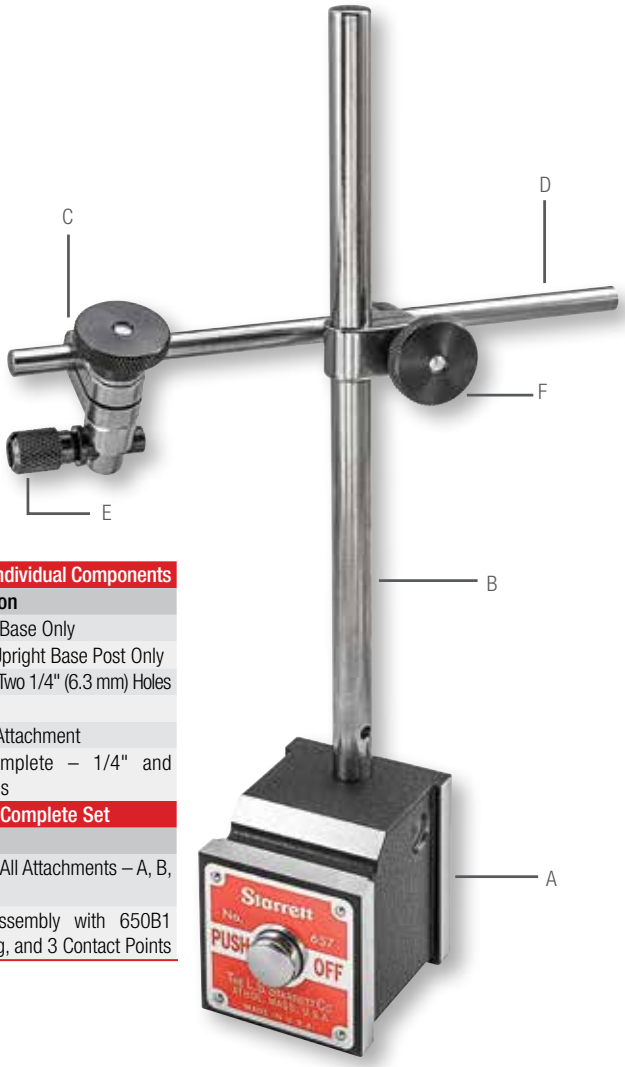

657AA Magnetic Base Indicator Holder - Individual Components			
Photo Key	**Cat. No.**	**EDP**	**Description**
A	657P	52757	Magnetic Base Only
B	657G	52753	7-7/16" Upright Base Post Only
C	657S	52759	Snug with Two 1/4" (6.3 mm) Holes
D	657X	52764	Rod
E	657Y	52765	Indicator Attachment
F	PT18724	50710	Snug Complete – 1/4" and 3/8" Holes

657AA Magnetic Base Indicator Holder - Complete Set		
Cat. No.	**EDP**	**Description**
657AA	52743	Magnetic Base with All Attachments – A, B, C, D, E, F
657-650Z	65259	Base and Post Assembly with 650B1 Indicator, 657S Snug, and 3 Contact Points

Indicator Holders

657A Magnetic Base Indicator Holder with Swivel Post Assembly

The swivel post assembly on these holders provides universal adjustment in both horizontal and vertical planes. Available with inch or millimeter Dial Test or Back-Plunger Indicators, they save time in shop set-up and other inspection jobs.

For use with all Test, Back-Plunger, AGD, Dial and Miniature-Dial Indicators. Also accommodates similar indicators of other manufacturers.

Powerful, permanent magnetic base holds firmly to steel or iron surfaces – horizontally, vertically, upside-down. Push-button turns magnetic force on or off for quick, one-hand set-up and take-down. V-step adapts base to horizontal or vertical arbors and chucks. There is an extra 1/4-20 NC tapped hole in side of base for indicator mounting post. Three precision ground magnetic contact surfaces (plus V-step). Black wrinkle finish on non-working surfaces.

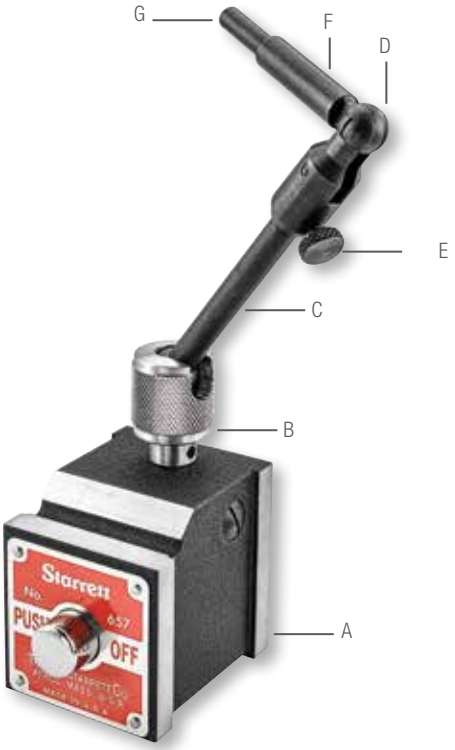

Magnetic Base Assembly Features:

A. 657P Magnetic Base is 1-15/16" x 1-5/8" x 1-7/8" (50 x 40 x 48mm) deep.
B. Swivel Cap Slot permits 90º post travel to horizontal position.
C. Post rotates 360º.
D. 657F Indicator Swivel Post Assembly is 6-1/2" (165mm) high (less threaded end). Assembly consists of items B, C, E, F, G.
E. Fine-Adjusting Screw. Turn to zero set indicator.
F. Upper arm is 2" (50mm) long with a 5/16" (8mm) diameter and swings more than 180º; friction joint holds it in position.
G. 7/32" (5.5mm) diameter step, 1/2" (13mm) long.

657A Magnetic Base Indicator Holder - Individual Components		
Cat. No.	**EDP**	**Description**
657A	52744	Magnetic Base with Swivel Post Assembly
657P	52757	Magnetic Base Only
657F	52752	Swivel Post Assembly Only

657A with 196B1 Universal Dial Indicator setting up workpiece on milling machine.

657A with 711LS Last Word Dial Test Indicator setting up workpiece on surface grinder.

657 Sets

These sets have been put together for your ordering convenience, but you can mix and match other Starrett test or back-plunger indicators and attachments with the 657A Magnetic Base and Swivel Post Assembly to suit your needs.

657T Flex-O-Post Indicator Holders with magnetic base - Individual Components			
Photo Key	**Cat. No.**	**EDP**	**Description**
F	657P	52757	Magnetic Base Only
(A, B, C, D, E)	3657U	12695	Flex-O-Post with Locking Lever and Snug Only
G	657W	52763	Fine-Adjustment Attachment
A	PT17850	72400	Indicator Holding Rod

657T Flex-O-Post Indicator Holders with magnetic base - Complete Assemblies		
Cat. No.	**EDP**	**Description**
657T	52760	Magnetic Base with Flex-O-Post Assembly
657TW	52761	Magnetic Base with Flex-O-Post Assembly and Fine-Adjustment Attachment

Indicator Holders

657T Flex-O-Post Indicator Holders with Magnetic Base

For use with all Starrett Test, Back-Plunger, AGD, Dial, and Miniature Dial Indicators. Also accommodates similar indicators of other manufacturers. The flexible post is an assembly of short tubular steel sections and precision ball joints, linked by an internal steel cable. It can be adjusted to any position and locked by turning a lever near the magnetic base. This makes it possible to use indicators in awkward places that are hard to reach with conventional holding devices.

Assembled to the magnetic base, the post has a vertical reach of approximately 15" (380mm) and a horizontal reach of approximately 10" (250mm). The indicator snug on the end of the post can be rotated through 360º and locked in any position.

The base has three precision ground magnetic contact surfaces. Grips horizontally, vertically or upside down. V-step holds base to arbors, shafts, chucks.

The 657W Attachment allows fine adjustments to be made, operated by turning the fine-adjusting thumb screw (with post locked in rigid position) to zero, then set the indicator.

A. Gage Rod. 3/8" x 3" (9.5mm x 75mm) has 5/16, 1/4 and 7/32" (8, 6.3, and 5.5mm) steps. Holds 708, 709, 711 and 811 Dial Test Indicators by body clamp. See attachment specifications for the appropriate indicator body clamp on previous pages.
B. Adjusting Take-up Sleeve with locking nut for maintaining proper degree of post rigidity.
C. Post Snug has 3/8" (9.5mm) hole (which will also grip AGD dial indicators by the stem).
D. Flex-O-Post 3657U.
E. Locking Lever tightens internal steel cable to make post rigid and lock it in position.
F. Magnetic Base 657P has push-button on/off switch.

651B1 Indicator gripped directly to its stem via the post snug.

196B1 Indicator via a 657S Snug.

657T Flex-O-Post Indicator Holders with magnetic base - Individual Components			
Photo Key	**Cat. No.**	**EDP**	**Description**
F	657P	52757	Magnetic Base Only
(A, B, C, D, E)	3657U	12695	Flex-O-Post with Locking Lever and Snug Only
G	657W	52763	Fine-Adjustment Attachment
A	PT17850	72400	Indicator Holding Rod

657T Flex-O-Post Indicator Holders with magnetic base - Complete Assemblies		
Cat. No.	**EDP**	**Description**
657T	52760	Magnetic Base with Flex-O-Post Assembly
657TW	52761	Magnetic Base with Flex-O-Post Assembly and Fine-Adjustment Attachment

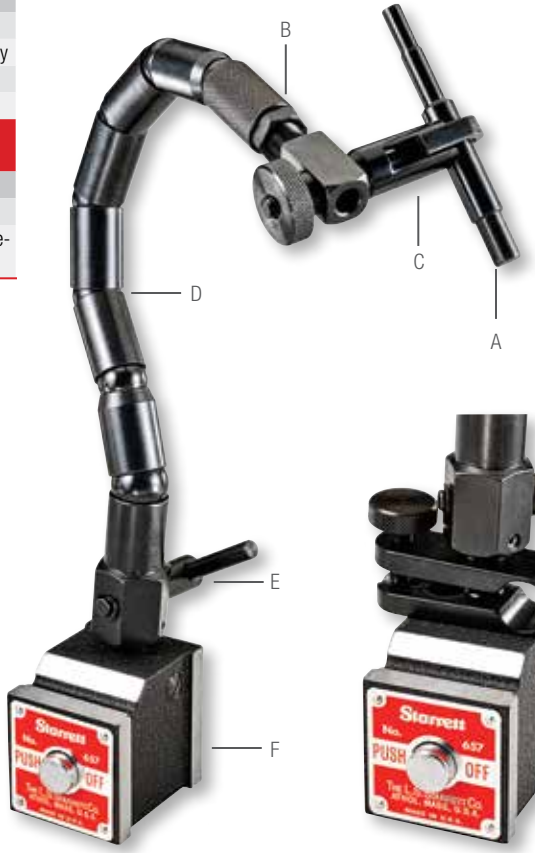

657W Fine-Adjustment Attachment

Indicator Holders

657-1, 657-2 Magnetic Base Universal Indicator Holder

WITH TRIPLE JOINTED ARM AND FINE ADJUSTMENT

This versatile indicator holder has three pivots available for positioning the indicator where needed. All pivots are controlled by one tightening knob. It will hold:

- Any indicator with a 3/8" (9.5mm) stem (such as our 25, 650 and 651 Indicators)
- Any indicator with a standard dovetail mount (such as our 708, 709, and 811 Indicators)
- Any indicator with a 1/4" (6.3mm) shank (such as our 196 Indicator)
- Any indicator with a 3/16" (4.7mm) shank (such as our 708, 709, 811 and 711 Indicators)
- Any indicator with a body clamp (such as our 711 Indicators)
- The working area is within a hemisphere having a radius of approximately 12" (300mm)
- The very sensitive fine-adjustment is located on the magnetic base to eliminate indicator deflection when it is being adjusted
- The 657-3 Universal Indicator Holder Arm Assembly can also be used on the 659P Base using the 659 Thread Adapter, PT18318

657-1 and 657-2 Magnetic Base Universal Indicator Holders - Individual Components

Photo Key	Cat. No.	EDP	Description
A	657-3	64438	Universal Indicator Holder Arm Assembly Only
B*	657W	52763	Fine-Adjustment Attachment
C*	PT17850	72400	Indicator Holding Rod
D	657P	52757	Magnetic Base Only
E	657S	52759	Snug with Two 1/4" (6.3 mm) Holes

657-1 and 657-2 Magnetic Base Universal Indicator Holders - Complete Assemblies

Cat. No.	EDP	Description
657-1	64436	Universal Indicator Holder, 657W Fine-Adjustment including 657P Magnetic Base, PT17850 Indicator Holding Rod, and 657S Snug
657-2	64437	Universal Indicator Holder with 657 Magnetic Base

* Not included with the 657-2

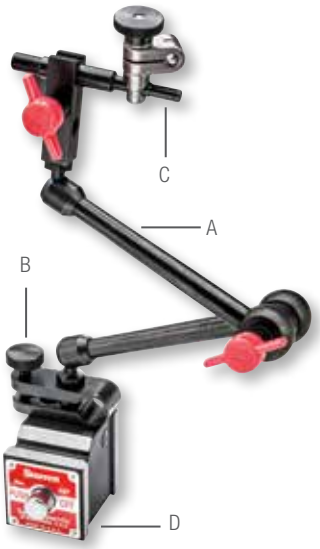

657-1 with 196B1 Universal Dial Indicator

709A Dial Test Indicator with dovetail mount

660 Magnetic Base Indicator Holder

WITH TRIPLE JOINTED ARM

The compact and versatile 660 Magnetic Base Indicator Holder has three adjustable pivots controlled by a single knob for fast, easy indicator positioning.

- Small but powerful magnetic base with 70lb (320N) holding force
- Positive On/Off switch
- Base Dimensions: 1-3/16" x 1-9/16" x 1-3/8" (30mm x 40mm x 35mm)
- Horizontal and vertical mounting positions
- Will hold any indicator with a 3/8" (9.5mm) stem or standard dovetail mount
- Articulating arm with powerful central locking knob, provides full 360º horizontal positioning and over 180º vertical positioning
- Maximum Horizontal Reach: 4.750" (120mm); Maximum Vertical Reach: 7.500" (190mm)
- Very sensitive fine-adjustment thumb screw

660 Magnetic Base Indicator Holder

Cat. No.	EDP	Description
660	68621	Base Indicator Holder

660 shown with Dial Indicator

Indicator Holders

661 Mini Magnetic Indicator Holder

The Mini Magnetic Tool Holder is a simple, versatile, effective and economical tool for a variety of indicator holding tasks. It has no levers or switches – simply place the holder on the measuring surface, attach the indicator and position as required.

Features and Specifications

- 30 lb (133 N) of holding force
- Base Diameter: 1.180" (30mm)
- Base Height: 1" (25.4mm)
- Overall Height 4.173" (106mm)
- Holds indicators with 3/8" stems or standard dovetail mounts
- Fits over spindles and posts with diameter of 1/4" (6.3mm), such as the 196 Dial Indicator
- Includes an 8mm adapter for indicators with metric (8mm) stems

661 Mini Magnetic Indicator Holder		
Cat. No.	EDP	Description
661	68620	Indicator Holder

659 Heavy-Duty Magnetic Base Indicator Holder

WITH ROTARY ON/OFF SWITCH. FURNISHED WITH OR WITHOUT STARRETT AGD DIAL INDICATORS

This holder has a powerful magnetic base that attaches to flat surfaces or on round work up to 5" (125mm) in diameter by a form-ground involute vee for accurate seating. It has approximately twice the holding power of our 657 Magnetic Base and has a rotary on/off switch.

A post snug with two 3/4" (19mm) gripping holes positions the dial indicator at any height and at any vertical angle and allows for 360º rotation of the gage rod. After locking the gage in place, the final indicator setting is made by an independent fine adjustment at the back end of the gage rod.

A second tapped hole (3/8"-24) in one side of the base is for mounting the post horizontally or adding another post for multiple inspection work. The base is furnished with a threaded adapter, making it possible to use the 657 Magnetic Base post and attachments. Base and snug have a black wrinkle finish with precision ground contact surfaces.

Available with or without Starrett AGD Dial Indicators: inch reading 25-131J (.0005" graduation) or millimeter reading 25-181J (0.01mm graduation). Other mechanical AGD indicators are available on request. Electronic indicators, 2600 and 2700, are also available on request.

Both the upright post and the gage rod are approximately 9 3/8" (238mm) long and 3/4" (19mm) in diameter.

Base Holder Assembly and Individual Components			
Photo Key	Cat. No.	EDP	Description
	659A	56687	Magnetic Base, Upright Post Assembly Including Post, Snug, Gage Rod with Clamp and Fine Adjust, and Thread Adapter, without Case
	659AZ	55947	Complete Assembly (Above) in Case
P	659P	55949	Magnetic Base, Including Thread Adapter
G	659G	56688	Upright Base Post Only
H	PT16846	71597	Swivel Post Snug Only with Two 3/4" (19mm) Gripping Holes
J	PT08903	72032	Gage Holding Rod Only, Including Clamp Mechanism and Fine-Adjustment
	PT18318	72040	Thread Adapter Only
Sets, Including Magnetic Base, Upright Post Assembly and AGD Dial Indicators			
Cat. No.	EDP	Description	
659BZ	55948	Base and Upright Post Assembly with Inch Reading Indicator 25-131J in Case	
659MBZ	64892	Base and Upright Post Assembly with Millimeter Reading Indicator 25-181J in Case	

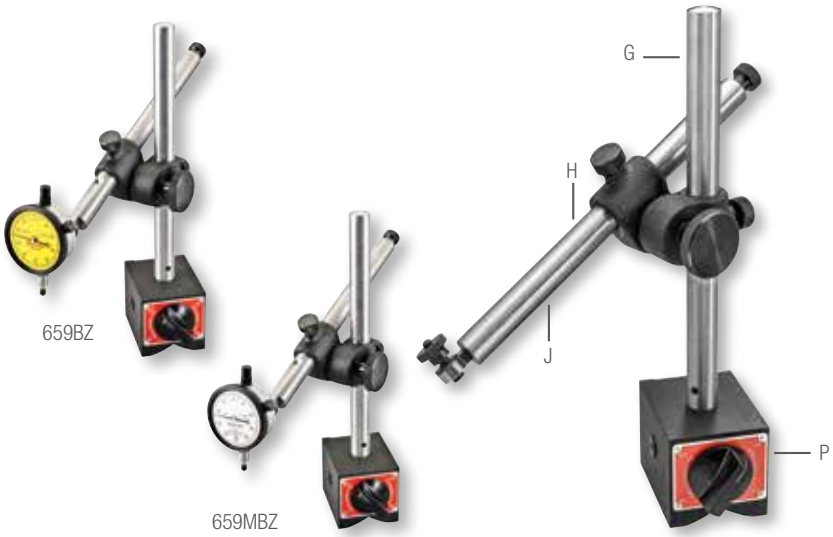

Indicator Holders

Common Test and Back Plunger Indicator Applications

A. Models with tool post holders, generally used for lathe work.

B. Indicators may be used on our 665 Inspection Holder.

B, C. Some indicator holders have flexible joints for holding in different places.

C, D. Indicators with straight stems or shanks can be held in snugs or in chucks and collets.

References for Other Test Indicator Holding Methods

In addition to the magnetic base indicator holders on the preceding pages, we also offer the following:

A. For very precise measurements such as comparing a part to a gage block set, we have our 252 Height Transfer Gage with our DIGI-CHEK® Height Gages

B. Any of our great variety of height gages - 250, 254, 255, and 3752 - can be used for comparing and for actual vertical measurements

C. Our 57 or 257 Surface Gages. These are for comparison and the truing-up of surfaces

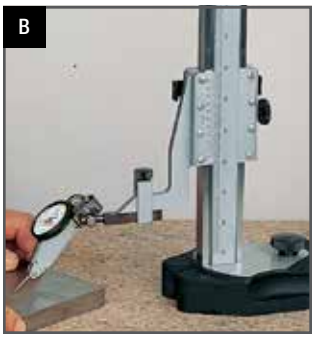

Indicator Holders

665 Inspection Holder and Dial Indicators

This is the most versatile dial indicator holder with an extremely stable base **(A)** that is 8-1/2" (215mm) long x 2-1/4" (57mm) wide at the bottom. It can inspect workpieces on the top surface of the ground base or within a working area defined by the 8" (200mm) upright base post **(B)** and the 9-1/2" (238mm) long gage-holding rod **(C)**. The base post can be conveniently located anywhere along the 8-1/2" (215mm) T-slot in the base.

This tool can be held in a vise or by a bolt in a machine T-slot coming up through one of the two 3/8" (9.5mm) holes in the base and fastening down on the top surface.

D. Swivel Post Snug 665D

Snug has a .375" (9.5mm) hole for the gage holding rod and a .465" (11.8mm) hole for the upright post. Also comes with the 665L Reducing Bushing (J) that can reduce the .465" (11.8mm) hole to 3/8" (9.5mm).

Individual Components			
Key	**Cat. No.**	**EDP**	**Description**
A	665A	52783	Base Only
B	665B	52784	Upright Base Post .464" x 8" (11.8 x 200mm) with Clamp Mechanism
C	PT06784-A	52755	Gage Holding Rod 3/8" x 9-1/2" (9.5 x 240mm) with Clamp Mechanism
D	665D	52754	Swivel Post Snug with .465" and 3/8" (11.8 and 9.5mm) holes with 665L Reducing Bushing
G	665G	52792	Clamp with .464" x 5-3/4" (11.8 x 146mm) Post
	665G-1/4	52793	Clamp with 1/4" (6.3mm) Diameter Post
	665G-5/16	52794	Clamp with 5/16" (7.9mm) Diameter Post
	665G-3/8	52795	Clamp with 3/8" (9.5mm) Diameter Post
H	665H	52790	Tool Post Holder Approximately 1" x 7/16" (25 x 11mm)
I	665G-1	52789	Offset Arm 3/8" (9.5mm) Diameter 3" and 5 1/2" (75 and 140mm) Arms
J	665L	52756	Reducing Bushing Only (for Swivel Post Snug) .465" (11.8mm) O.D. .375" (9.5mm) I.D.

Inspection Sets with AGD Dial Indicators		
Cat. No.	**EDP**	**Description**
665JZ	56275	Complete with Components and 25-131J Inch Reading Indicator in Case
665MJZ	56276	Complete with Components and 25-181J Millimeter Reading Indicator in Case

Three very useful inspection combinations can be made by removing the complete swivel post snug and gage holding rod as follows:

G. Clamp 665G

Take the clamp and put the clamp post into the snug and lock it. Now this combination can be used to clamp the gage holding rod and the indicator into hard-to-reach places for inspecting jigs, fixtures, lining up work on centers and machine tables.

The clamp has a 3" (75mm) capacity and a post with an approximately 5-3/4" (145mm) length. The clamp post is .464" (11.8mm) diameter that fits into the regular swivel post snug 665D.

Three other clamp post diameter options available – 665G-3/8 is a 3/8" (9.5mm) diameter clamp post that can be used in the regular swivel post snug 665D with the addition of the 665L reducing bushing. The 665G-5/16 (7.9mm) and 665G-1/4 (6.3mm) can be used with other snugs to hold an indicator.

H. Tool Post Holder 665H

Put one end of the offset arm into the swivel post snug 665D (with the 665L reducing bushing in it). Then put this rectangular tool post holder 665H onto the other arm. This combination now allows for a good, tight setup in lathe tool posts and other machine setups.

I. Offset Arm 665G-1

Another very popular measuring combination is to put the reducing bushing (which is furnished) into the snug and then put one leg of the offset arm into it. Now the tool can be used in a 3/8" (9.5mm) chuck or collet to sweep a large area.

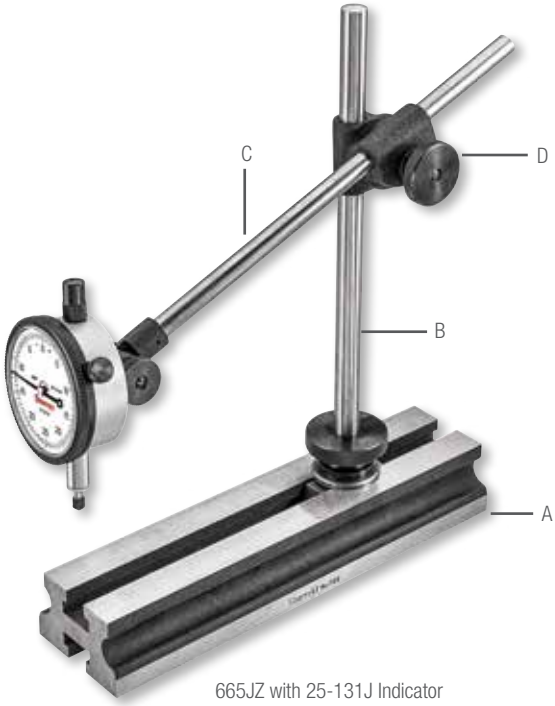

665JZ with 25-131J Indicator

Indicator Holders

675 Dial Comparators with Granite Base

Extremely rugged and universally adjustable to any position, these gages are well suited for inspection, layout, checking and lineup operations anywhere in the shop. All settings are individually made without disturbing others.

These versatile stands allow the indicator to be positioned at any height within the capacity of the upright base post – 360º both horizontally and vertically.

The indicator can also be moved lengthwise within the capacity of the 3/4" x 9-7/8" (19 x 250mm) horizontal gage-holding rod.

A special feature of this tool is the sensitive, fine-adjustment at the end of the gage rod. The fine-adjustment range is approximately 1/4" (6.3mm).

A 1/4" (6.3mm) steel indicator contact point is provided, but contact points in other lengths and materials are also available – see previous accessory pages.

This holder has a Starrett Grade-A Crystal Pink® Granite base that is 8" x 12" x 2" (200 x 300 x 50mm), and is finished to an overall tolerance of .0001" (0.0025mm).

NOTE: Not recommended for electronic indicators 2" and above.

675 Complete Units					
With Granite Base		Dial Indicator Specifications			
Cat. No.	EDP	Graduation	Dial Reading	Range	Indicator No.
675GJ	55964	.0005"	0-25-0	.125"	25-131J
675GMJ	56129	0.01mm	0-50-0	2.5mm	25-181J

Individual Components		
Cat. No.	EDP	Description
675G	66051	Granite Base, Upright Base Post and Gage Holding Rod, Including Clamp Mechanism and Fine-Adjustment
PT08903	72032	Gage Holding Rod Only, Including Clamp Mechanism and Fine-Adjustment
PT16846	71597	Swivel Post Snug Only with Two 3/4" (19mm) Gripping Holes

Available with special non-shock mechanism or without indicator. Any Starrett AGD Dial or Electronic Indicator can be interchanged with indicators listed. Please specify when ordering.

675G

653 Dial Comparators

WITH CAST IRON BASE, INCH AND MM READING

653G Dial Comparators

WITH GRANITE BASE, INCH AND MM READING

These bench-type comparator gages are ruggedly built for in-process and final inspection work.

The dial indicator can be adjusted vertically and locked in any position. A sliding ring with locking screw below the beam permits swinging the indicator to either side. The ring also acts as a safety device, preventing the beam from accidentally dropping. There is a fine adjustment on the beam for final indicator setting.

The hand lifting lever on the indicator raises the spindle and releases it to contact the work. Left hand lever furnished unless otherwise specified.

Both gages have a maximum vertical capacity of 9-1/4" (235mm) and a throat depth of 5" (125mm) and a vertical indicator fine adjustment of up to 1/2" (12.7mm). Post diameter is 1-1/2".

653 Dial Comparator has a precision ground cast iron base measuring approximately 8" x 9" (200 x 225mm).

653G Dial Comparator has a Starrett Grade A, Crystal Pink® Granite base, measuring 8" x 12" x 2" (200 x 300 x 50mm). Base is finished to an overall tolerance of .0001" (0.0025mm).

NOTE: Recommended for electronic indicators 2" and above.

653 Complete Units							
With Cast Iron Base		With Granite Base		Dial Indicator Specifications			
Cat. No.	EDP	Cat. No.	EDP	Indicator No.	Graduation	Dial Reading	Range
653J	52737	653GJ	55966	655-141J	.001"	0-50-0	.250"
653MJ	56146	653GMJ	56127	655-181J	0.01mm		2.5mm

Individual Components		
Cat. No.	EDP	Description
653	55917	Comparator with Cast Iron Base, without Indicator
653G	56646	Comparator with Granite Base, without Indicator

Available with special non-shock mechanism or without indicator. Any Starrett AGD Dial or Electronic Indicator can be interchanged with indicators listed. Please specify accordingly.

653J

653GJ

Special Function Dial Gages

This section includes special function dial gages that we list as regular items. Gages are also available with electronic indicators on request, where noted.

- Chamfer Gages
- Countersink Gages
- Hole Gages
- Bore Gages – See Bore Gage Section
- Direct-Reading Thickness Gages
- Snap Gages
- Groove Gages
- Caliper Gages
- Depth Gages
- Out-of-roundness Gages
- Inside Dial Gages
- Automotive Gages
- Crankshaft Distortion Gages
- Cylinder Gages
- Disc Brake Gages
- Large Diameter Gages

In addition, we have made many other special function gages to suit a wide variety of our customers' specific requirements. If you have a special application, we invite you to submit your drawings and specifications to our Special Order Department at 121 Crescent Street, Athol, MA 01331, USA. We will be happy to provide a prompt quotation.

Special Function Indicators

Chamfer Gages

FOR INTERNAL CHAMFERS:

683 CHAMFER GAGE 0-90º

684 CHAMFER GAGE 90-127º

FOR EXTERNAL CHAMFERS:

685 CHAMFER GAGE 0-90º

686 CHAMFER GAGE 90-127º

These gages directly measure the diameter of chamfered holes. No setting master is necessary. When the three-blade plunger is pressed against a flat surface, the gage should read the set number stamped on the back of the indicator. In case of wear, the gage may be adjusted to read the proper number.

All ground surfaces are of hardened tool steel. Indicators are AGD design.

Internal gages will measure the largest diameter of any chamfer that has an included angle within the range of angles printed on the dial face of the gage.

External gages will measure the smallest diameter of any chamfer within the range of angles printed on the dial face of the gage.

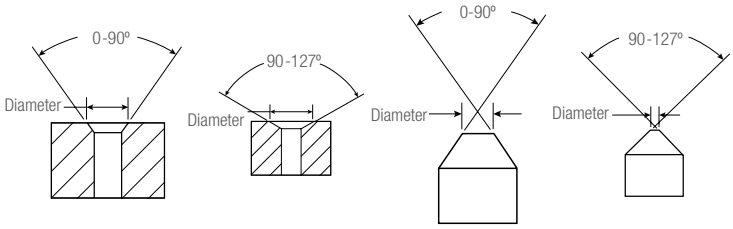

683 (Internal) 684 (Internal) 685 (External) 686 (External)

683 Inch Reading Internal Gages					684 Millimeter Reading Internal Gages with Yellow Dials				
0-90º Angle		90-127º Angle			0-90º Angle		90-127º Angle		
Cat. No.	EDP	Cat. No.	EDP	Range	Cat. No.	EDP	Cat. No.	EDP	Range
683-1Z	63684	684-1Z	63688	0-3/8"	683M-1Z	64989	684M-1Z	64993	0-9.5mm
683-2Z	63685	684-2Z	63689	0-1/2"	683M-2Z	64990	684M-2Z	64994	0-12.7mm
683-3Z	63686	684-3Z	63690	0-1"	683M-3Z	64991	684M-3Z	64995	0-25mm
683-4Z	63687	684-4Z	63691	1-2"	683M-4Z	64992	684M-4Z	64996	25-50mm
685 Inch Reading External Gages					**686 Millimeter Reading External Gages with Yellow Dials**				
0-90º Angle		90-127º Angle			0-90º Angle		90-127º Angle		
Cat. No.	EDP	Cat. No.	EDP	Range	Cat. No.	EDP	Cat. No.	EDP	Range
685-1Z	63692	686-1Z	63695	1/8-1/2"	685M-1Z	64997	686M-1Z	65000	3.2-12.7mm
685-2Z	63693	686-2Z	63696	3/16-1"	685M-2Z	64998	686M-2Z	65001	4.7-25mm
685-3Z	63694	686-3Z	63697	1-2"	685M-3Z	64999	686M-3Z	65002	25-50mm

Also available with electronic indicators. Please specify.
Gages furnished in deluxe padded case.

685-2Z Internal Chamfer Gage with 695 Check Stand with F2720-4IQ Electronic Indicator

Special Function Indicators

Countersink Gages

687 COUNTERSINK GAGE 82º
688 COUNTERSINK GAGE 90º
689 COUNTERSINK GAGE 100º

Starrett Countersink Gages are offered in three different angles so that the gage sets on the angular side of the countersink, as opposed to a chamfer gage which sets on the top edge of the chamfer.

This gage directly reads the large diameter of the countersink in .002" or 0.05 mm increments. A set master ring is furnished with each gage for calibration and setting. Press the button on top of the indicator to firmly depress the gage head into the countersink. When the gage is removed, the indicator reading is held in place until the reset button is activated.

All ground surfaces are of hardened tool steel. Indicators are AGD design.

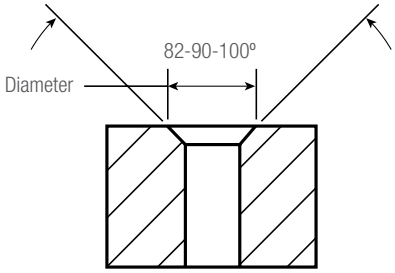

687, 688, 689

Inch Reading Countersink Gages						
82º Angle		90º Angle		100º Angle		
Cat. No.	EDP	Cat. No.	EDP	Cat. No.	EDP	Range
687-1Z	63698	688-1Z	63702	689-1Z	63706	.020-.170"
687-2Z	63699	688-2Z	63703	689-2Z	63707	.160-.360"
687-3Z	63700	688-3Z	63704	689-3Z	63708	.360-.560"
687-4Z	63701	688-4Z	63705	689-4Z	63709	.560-.780"
Millimeter Reading Countersink Gages with Yellow Dials						
82º Angle		90º Angle		100º Angle		
Cat. No.	EDP	Cat. No.	EDP	Cat. No.	EDP	Range
687M-1Z	65003	688M-1Z	65007	689M-1Z	65011	0.5-4.3mm
687M-2Z	65004	688M-2Z	65008	689M-2Z	65012	4-9mm
687M-3Z	65005	688M-3Z	65009	689M-3Z	65013	9-14.2mm
687M-4Z	65006	688M-4Z	65010	689M-4Z	65014	14.2-19.8mm

Check Gage Stand for Chamfer, Countersink and Hole Gages		
Cat. No.	EDP	Description
695	63875	8-3/16" H x 6" W x 4" D (212 x 150 x 100mm) Hold Downs - 5" (125mm) on Center – 1/4" (6.3mm) Holes

Also available with electronic indicators. Please specify.

687

688

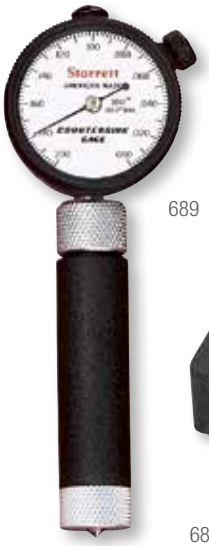

689

687-3Z Countersink Gage with 695 Check Stand with F2720-4IQ Electronic Indicator

Special Function Indicators

Hole Gages

690 HOLE GAGE
.010-.330"

690M HOLE GAGE
0.25-8.35MM

These hole gages will check hole diameters to .001" and 0.02mm. They are fast, accurate, easy to read and have a balanced design for easy one- hand operation.

The gage can be pressed down on a flat surface and checked so the size should read the same as the set number stamped on the back of the indicator. It can also be checked and set with an optional "setting master".

All ground surfaces are of hardened tool steel. Indicators are AGD design.

Holes that need to be accurately checked must have no chamfers or countersinks.

690

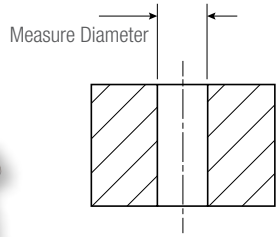

690

690M

Inch Reading Hole Gages				
Gages		Set Masters (Optional)		
Cat. No.	EDP	Part No.	EDP	Range
690-1Z	63710	PT23710-1	63879	.010-.040"
690-2Z	63711	PT23710-2	63880	.030-.130"
690-3Z	63712	PT23710-3	63881	.130-.230"
690-4Z	63713	PT23710-4	63882	.230-.330"
Millimeter Reading Hole Gages with Yellow Dials				
Gages		Set Masters (Optional)		
Cat. No.	EDP	Part No.	EDP	Range
690M-1Z	63714	PT23710-5	63883	.25-1.00mm
690M-2Z	63715	PT23710-6	63884	.75-3.30mm
690M-3Z	63716	PT23710-7	63885	3.30-5.85mm
690M-4Z	63717	PT23710-8	63886	5.85-8.35mm
Check Gage Stand for Chamfer, Countersink and Hole Gages				
Cat. No.	EDP	Description		
695	63875	8-3/16" H x 6" W x 4" D (212 x 150 x 100mm) Hold Downs - 5" (125mm) on Center – 1/4" (6.3mm) Holes		

Also available with electronic indicators. Please specify.

170 Dial Sheet Gages

.150"

Measures the thickness of sheet materials like paper, cardboard, leather, plastics and metals. Raise the movable contact, insert the work, remove thumb, and spring pressure holds the work parallel with the contacts. Thickness is registered on the dial. By turning the knurled bezel, the dial may be moved to bring the hand to zero.

- Contact edges are radiused to prevent work from being marred or deflected
- The flat contact area measures 5/16" in diameter
- Black finish
- 1-1/8" throat depth
- Furnished in deluxe padded case

170Z

170 Dial Sheet Gages, Inch Reading				
Cat. No.	EDP	Range	Graduation	Dial Reading
170Z	50647	.150"	.001"	0-100

Special Function Indicators

649 Spindle Squares™

The 649 Spindle Square™ offers accuracy, convenience and significant time saving with the common shop task of tramming the head of a vertical milling machine. This must be done regularly to ensure squarness and perpendicularity between the spindle and work surface.

The spindle square is easier to use and more precise than the traditional method of tramming with a dial test indicator.

Using the Spindle Square

After setting the spindle square indicators to "0" on a surface plate, place the Spindle Square™ into the collet of the milling machine and bring the head down to the table until both indicator needles have rotated approximately one full rotation.

The needles do not need to point in the same direction. Identical numerical readings, not the needle positions, indicate squareness.

To tram the milling machine, adjust the machine per normal procedures until both indicators read the same numerical value. After setting the X-axis, repeat the same procedure with the Y-axis.

Features and Specifications

- Fully assembled with two AGD Group 2 dial indicators
- Patented design
- Solid steel body construction with durable black oxide finish
- Ground gaging surface
- Approximately 4lbs with custom case
- 3/8" inch shank diameter
- 4" (100mm) between contact points
- Approximately 6-3/4" (172mm) wide and 5" (140mm) from the top of shank to the end of the contact points

649 Spindle Square

Cat. No.	EDP	Range	Graduation	Dial Reading
649-1	52080	.250"	.001"	0-50-0
649-5	52081	.125"	.0005"	0-25-0
649-1M	52082	2.5mm	0.01mm	0-50-0

649-1

Special Function Indicators

765A Electronic Snap Gage

0-1/2"/0-12.7MM

High quality, economical gage that is ideal for inspectors, purchasing agents, sales people and other who need to quickly measure materials up to 1/2" or 12.7mm thick.

- Balanced, compact design
- Simple, logical control buttons
- Easy-to-read LCD
- Single, long-life battery with easy access
- Light-weight aluminum frame
- Inch/millimeter conversion
- Zero at any position
- Manual ON/OFF, AUTO OFF
- Furnished in fitted plastic case

765A

765A* Electronic Snap Gage							
		Range		Linear Accuracy		Resolution	
Cat. No.	EDP	in	mm	in	mm	in	mm
765A	67659	0-1/2	0-12.7	±.0010	±0.02	.0005	0.01

Accessories		
Part No.	EDP	Description
PT99492	65650	Two Replacement Batteries, CR2032

* No output available on the 765A.

1010, 1010M Dial Indicator Pocket Gages

.375"/9MM

Handy pocket gage is approximately the size of a thin pocket watch. Ideal for inspectors, purchasing agents and sales people to check the size of materials up to 3/8" or 9mm thick. The gage fits naturally in the curve between the thumb and index finger. A slight pull on the serrated top plate raises the spindle.

- Throat depth ranges from 1/2" (12.7mm) down to 5/16" (8mm)
- Models are available with flat or rounded contacts as listed
- The diameter of both the flat or round contacts are 1/4" (6.3mm)
- Gage has a small count hand for recording each revolution of large hand
- Chrome plated case, unbreakable crystal dial cover
- Furnished in attractive, protective case

1010 Dial Indicator Pocket Gages, Inch Reading					
Cat. No.	EDP	Range	Graduation	Dial Reading	Contacts
1010Z	53114	.375"	.001"	0-100	Flat
1010EZ	53115		.0005"	0-50	
1010RZ	56067	.275"	.001"	0-100	Round
1010M Dial Indicator Pocket Gages, Millimeter Reading					
Cat. No.	EDP	Range	Graduation	Dial Reading	Contacts
1010MZ	53116	9mm	0.01mm	0-100	Flat

1010Z

Special Function Indicators

1015, 1015M Portable Dial Thickness Gages

0-1"/0-25MM

After inserting work between the measuring contacts, releasing the lever will cause the spindle to contact the work, giving an accurate size reading because measuring pressure is independent of the user. Indicators have jewel bearings and continuous dials. Models with balanced dials, other graduations and ranges are also available on special order. Electronic indicators can also be furnished. Throat depths include 2-1/2", 4", and 6". The contact edges are radiused to prevent the work from being marred or deflected. The flat contact area measures 1/4" (6.3mm) in diameter and is 1/8" (0.125mm) thick. Special contact sizes and shapes are available by request.

1015B-4

Special Order with 2900 Electronic Indicator

1015 Portable Dial Thickness Gages, Inch Reading								
Without Case		Case Only						
Cat. No.	EDP	Cat. No.	EDP	Throat Depth	Range	Graduation	Dial Reading	Dial Indicator Model No.
1015A	53119	1015AZZ	55407	2-1/2"	1/2"	.0005"	0-50	1015A-431J
1015B	53121	1015BZZ	55408		1"	.001"	0-100	1015B-441J
1015A-4	67646			4"	1/2"	.0005"	0-50	1015A-431J
1015B-4	67649				1"	.001"	0-100	1015B-441J
1015A-6	67652			6"	1/2"	.0005"	0-50	1015A-431J
1015B-6	67655				1"	.001"	0-100	1015B-441J
1015M Portable Dial Thickness Gages, Millimeter Reading								
Without Case		Case Only						
Cat. No.	EDP	Cat. No.	EDP	Throat Depth	Range	Graduation	Dial Reading	Dial Indicator Model No.
1015MA	56131	1015AZZ	55407	63mm	10mm	0.01mm	0-100	1015MA-481J
1015MB	56133	1015BZZ	55408		25mm			1015MB-881J
1015MA-100	67647			100mm	10mm	0.01mm	0-100	1015MA-481J
1015MB-100	67650				25mm			1015MB-881J
1015MA-150	67653			150mm	10mm	0.01mm	0-100	1015MA-481J
1015MB-150	67656				25mm			1015MB-881J

Special Function Indicators

1150 Dial Indicator Snap Gages

0-8"

These compact gages have rigid aluminum alloy frames protected from hand heat by insulating handles. They are used to gage outside diameters to an accuracy of .0001".

Dimensional variations are transmitted to the dial indicator through a linear friction-free transfer mechanism totally enclosed for protection against side thrust, foreign matter and coolants. Flat gaging contacts simplify measurement close to shoulders. The top sensitive contact may be reversed to present a spherical face to the work. An adjustable backstop simplifies centering the work.

The contacts and backstop are 5/16" diameter hardened tool steel, precision ground and lapped flat. The contacts are individually adjustable to a maximum 2" range and are locked in position by tightening parallel-lock clamps to maintain parallelism of faces. Both contacts are also keyed to maintain orientation of faces regardless of adjustment.

Plus or minus tolerances are read directly from the indicator since the dial face has a double row of graduations reading in opposite directions from zero, with "minus" graduations in red and "plus" in black. The indicator can be rotated 360º and locked in position to read from any angle, and a fine-adjusting screw provides for zero setting the hand. A guard protects the dial indicator when the gage is laid down.

A bench stand is available to convert the gage to a bench comparator. T1150 Dial Indicator Snap Gages also available with indicators other than those listed, a 717 Gage Amplifier and gaging head in place of the indicator, carbide faces on the contacts, special contact and backstop shapes and sizes, variable gaging pressure control, disc setting and other special masters, and larger ranges.

1150 Dial Indicator Snap Gages, Inch Reading						
Without Stand			Dial Indicator			
Cat. No.	EDP	Range	Graduation	Dial Reading	Range	Model No.
1150Z-2	53168	0-2"	.0001"	10 – 10	.040"	81-111-1150
1150Z-4	53169	2-4"				
1150Z-6	53170	4-6"				
1150Z-8	53171	6-8"				
Accessory for 1150 Dial Indicator Snap Gages						
Cat. No.	EDP	Description				
1150	53172	Bench Stand Only				

Gages furnished in case.

Special Contacts

Some of the many interchangeable anvil configurations designed to suit special applications.

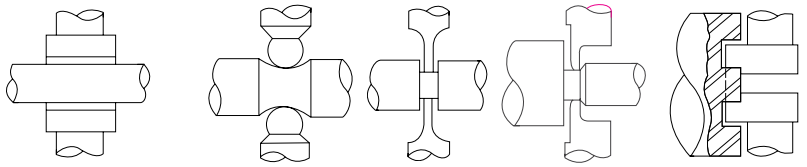

Wide Face up to 9/16" Square | Ball or Roll | Blade Type | Offset | Offset for Face Groove

1150Z-2 mounted on 1150 Bench Stand

1150Z-2 with F2720AD Electronic Indicator

Special Function Indicators

1175, 1175M Dial Indicator Groove Gages

.375-6"/9.5-150MM

This lightweight gage is used for in-process or bench inspection of oil grooves, snap ring retainer grooves, "O" ring seat retainer grooves and similar internal recesses. It is also useful for checking bore dimensions and testing for taper, bell-mouth and out-of-roundness.

The movable, sensitive gaging contact has a 1/2" (12.7mm) retractable range and transfers the measurement through a linear, friction-free transfer mechanism to the dial indicator. The lower reference jaw is fixed and supports the entire weight of the gage and the operator's hands, thus preventing incorrect gaging pressure and false readings.

The reference jaw can be mounted in two positions on the range adjusting bar. The bar itself is also adjustable for greater or lesser range. A fine adjustment screw and a lock are also provided.

1175 and 1175M Dial Indicator Groove Gages

Cat. No.	EDP	Range	Dial Indicator Model No.	Graduation	Reading	Range
1175Z	53173	.375-6"	81-136-1175	.0005"	±30	.060"
1175MZ	65032	9.5-150mm	81-181-1175	0.01mm	±100	2.5mm

Features

- Supplied with two sets of jaws, both readily interchangeable
- Three sets of contacts are furnished (Styles 1-10, 2-10, 2-20) that can be attached to the ends of the jaws without replacing the entire jaw. Contacts have flush ends so that grooves at the bottom of blind holes can be gaged. The contacts are hardened steel with a hard chrome finish for long life.
- Gage can be set with gage blocks or other methods such as micrometers, vernier calipers and ring gages
- Furnished with storage case

Special jaws for 4" and 6" (100mm and 150mm) gaging depths, a diameter range extension bar from 6-12" (150-300mm), dial indicators graduated in .001", or any special modification of gaging contacts and jaws, are also available by request through our Special Order Department.

1175 Dial Indicator Groove Gage Contact Sets

Part No. Upper	Part No. Lower	Contact Set	Will Enter Minimum Bore in	Will Enter Minimum Bore mm	Maximum Groove I.D. in	Maximum Groove I.D. mm	Minimum-A Groove Depth in	Minimum-A Groove Depth mm	Minimum-B Groove Width in	Minimum-B Groove Width mm
PT30917	PT30917	Style 1-10	.375"	9.5	3.00"	75	.100"	2.5	.024"	0.6
PT30918	PT30919	Style 2-10	.690"	17.5	5.00"	125	.140"	3.6	.034"	0.8
PT30920	PT30921	Style 2-20	1.00"	25	6.00"	150	.265"	6.7	.051"	1.3

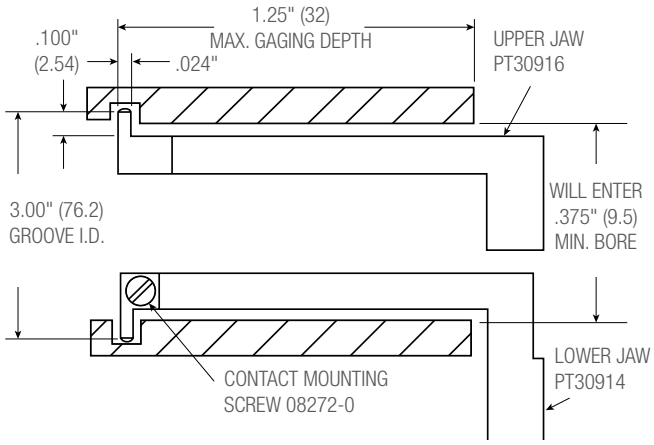

STYLE 1-10

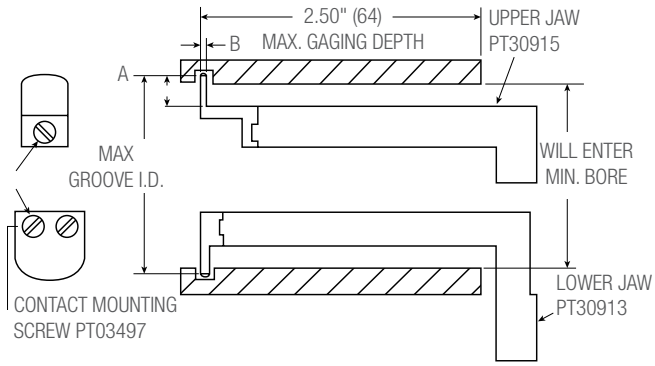

STYLES 2-10, 2-20

1175Z

Special Function Indicators

1017 Outside Dial Caliper Gages

0-2"/0-50MM

These gages are designed for use in measuring castings, forgings and sheet metal work. Large clearances have been provided to reach over part configurations for easy measurement of small sections. The convenient retraction lever allows for one-hand operation and good gage control.

The dial indicator has a direct reading count hand. The contacts are cylindrical carbide for long wear life.

1017-4

1017 Outside Dial Caliper Gages				
Cat. No.	EDP	Range	Graduation	Throat Depth
1017-4	65091	0-2"	.001"	4"
1017-8	64959			8"
1017M-100	64179	0-50mm	0.02mm	100mm
1017M-200	64180			200mm

1019, 1019M Internal Dial Caliper Gages

.400-1.4"/10-35MM

These indicating gages are ideal for obtaining fast, comparative I.D. measurements, especially in hard-to-reach locations. The user depresses the button on the indicator housing and releases, allowing the arms to make contact with the work.

- Makes convenient, accurate I.D. measurements
- Spring loaded design provides constant pressure and positive contact for reliable measurements
- Can be set with a micrometer or ring gage
- 3-1/4" arm length for ample reach
- Rotatable bezel for zero setting and bezel lock
- Jewel bearings
- .040" (1.016mm) dia. carbide ball measuring contacts

1019

1019M

1019 and 1019M Internal Dial Caliper Gages			
Cat. No.	EDP	Range	Description
1019-1	66559	.400-1.4"	.001" with Revolution Counter
1019M-25	67120	10-35mm	0.025mm with Revolution Counter

697, 697M Inside Dial Gages

2-3/8–18"/61–458MM

These gages are used between two walls to check parallelism and also to take comparative measurements of internal diameters. There are ten rods and one extension furnished. The rods are marked to designate the approximate overall length of the gage. All measuring contacts are rounded. Tool can be set with a micrometer.

The indicator bezel is rotated to adjust the dial in relation to the hand and has a non-breakable crystal. The movement of the dial indicator is approximately 5/32" (4mm). Rods of different lengths can also be furnished on request.

697Z

697 and 697M Inside Dial Gages					
Cat. No.	EDP	Range	Graduation	Dial Reading	One Revolution
697Z	52907	2-3/8–18"	.001"	0-20-0	.040"
697MZ	52908	61-458mm	0.02mm	0-50-0	1.0mm

Special Function Indicators

668 Shaft Alignment Clamp Sets

The 668 Shaft Alignment Clamp is designed for fast, precise alignment of motors, pumps, compressors, etc. This system is capable of addressing radial and angular misalignment problems and can be set up within minutes.

668 Shaft Alignment Clamp Sets

Cat. No.	EDP	Description
S668A	67150	1 each: Chain Clamp, Extension Plate, Posts (5", 7-7/16", 9"), without Case
S668BZ	67151	2 each: Chain Clamp, Extension Plate, Posts (5", 7-7/16", 9"), with Fitted Case
S668CZ	67152	2 each: Chain Clamp, 196B5 Indicator, PT18724 Snug, Extension Plate, Posts (5", 7-7/16", 9"), with Fitted Case
S668DZ	67153	2 each: Chain Clamp, 81-141J Indicator, 657Y Indicator Attachment, PT18724 Snug, Extension Plate, Posts (5", 7-7/16", 9"), with Fitted Case
27984-0	-	Extra Length Chain: 24" #35 ANSI Chain with Link

668 Shaft Alignment Clamp

Photo Key	Cat. No.	EDP	Individual Components
A	668	67155	Chain Clamp Only
B	PT99529	67454	Extension Plate Screw, Washer
C	PT27981	67302	5" Post
D	657G	52753	7-7/16" Post
E	PT27982	67303	9" Post
F	PT18724	50710	Snug Complete
G	657Y	52765	Indicator Attachment

Features

- Lightweight clamp design made of black anodized aluminum
- Rigid 3/8" diameter stainless steel indicator posts provided in three lengths (5", 7-7/16", and 9")
- Extension plate allows for added radial clearance
- Heavy-duty roller chain can accommodate up to a 7-1/2" diameter shaft
- Sets are available with either two 196B5 or 81-141J Indicators
- Excess roller chain can be secured to the side of the chain clamp
- A second shaft alignment clamp can be mounted across from the first clamp to act as a vertical "target" for face alignment

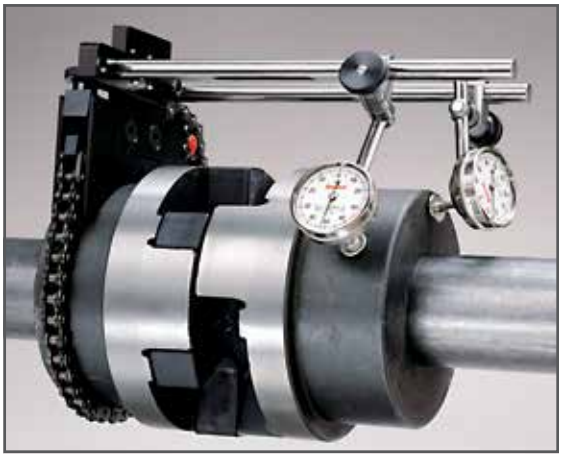

Special Function Indicators

696, 696M Crankshaft Distortion Dial/Strain Gage

2-3/8–18"/61–458MM

Ideal gage for checking bearing alignment or shaft deflection without dismantling the engine. Also useful as a strain gage on engine frames. This inside measuring gage checks the distortion of crankshaft webs and bears a direct relation to existing misalignment or excessive bearing wear. Used on all diesel engine shafts and center crankshafts on any type of engine or compressor, the gage can also be applied as a strain gage on engine frames while the engine is operating. A comparison of readings taken at top and bottom positions indicates any misalignment of cylinder and frame which results in local over-stress and eventual cracking of the frame neck.

With a special spring tension in the dial indicator, the gage is self-sustaining in any position without sacrificing necessary rigidity, leaving the operator's hands free. Hardened and ground to a sharp point, conical contact points have an approximate 60º included angle, and will stay in place on 45º surfaces.

696Z

696 and 696M Crankshaft Distortion Dial/Strain Gages

Cat. No.	EDP	Range	Dial Indicator Graduation	Dial Reading	Range One Rev.	Description
696Z	52901	2-3/8–18"	.001"	0-20-0	.040"	Strain Gage with Balancing Attachment
696MZ	52902	61-458mm	0.02mm	0-50-0	1mm	Millimeter Strain Gage with Balancing Attachment
696B	52903	Balancing Attachment Only				

Gage furnished with 10 rods, sharp points and balancing attachment in attractive, protective case.

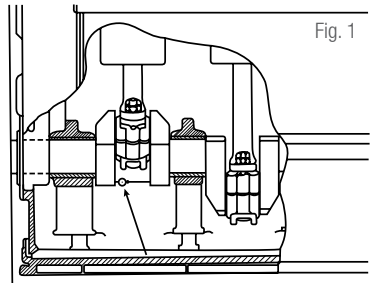

Fig. 1

STRAIN GAGE APPLIED TO CRANK OF DIESEL ENGINE TO DETERMINE IMPROPER ALIGNMENT.

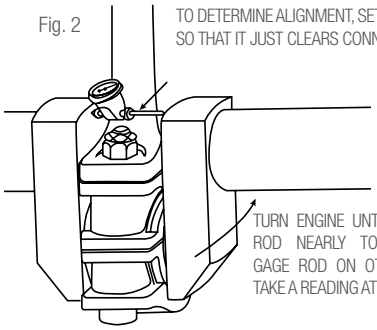

Fig. 2

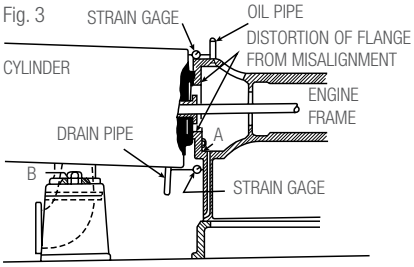

Fig. 3

MISALIGNMENT OF CYLINDER AND ENGINE FRAME (SHOWN EXAGGERATED FOR PURPOSES OF ILLUSTRATION)

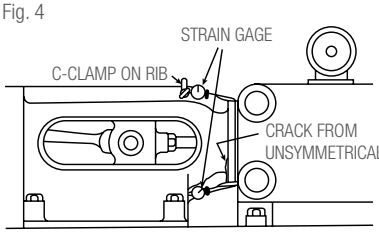

Fig. 4

STRAIN BETWEEN APPLIED ENGINE FRAME (WHILE OPERATING), DIFFERENCE BETWEEN TOP AND BOTTOM READINGS OF THE STRAIN GAGE INDICATES IMPROPER ALIGNMENT, CAUSING CRACKS.

696B Balancing Attachment is furnished with the gage. For certain applications, like turning the crank under test with the gage in place, the attachment can be adjusted to maintain the face of the indicator upward or in desired position. To install on a strain gage in use, remove the knurled clamping nut, then the doweled plate or end strap at either end by the screw. The unit is then positioned over the hubs on two sides of the indicator head. A spring plunger provides the friction that holds the balance in proper relation to position. The parts are nickel plated.

The dial indicator movement is approximately 5/32" (4mm) and with rods and extension, provides a range from 2 3/8-18" or 61-458mm. There are 10 rods and one extension furnished. Rods are marked to designate the approximate overall length of the gage. Indicator has a movable bezel to adjust the dial in relation to the hand and a non-breakable crystal.

Designed in collaboration with Hartford Steam Boiler Inspection and Insurance Company. It was known as the Hartford Steam Boiler Engine Strain Gage and is used by their inspectors to check the distortion of engine shafts and frames.

696B Balancing Attachment

Special Function Indicators

452 Cylinder Gages

2-1/2–9"

These convenient, easy-to-use gages are used to determine taper and out-of-roundness of bores, offering a quick and accurate way to show your customer whether new rings or reconditioning is necessary.

The ranges are achieved by the use of two measuring contact rods. The gage is easily and accurately set to a micrometer.

Features:

- Dial is graduated to show plus or minus
- Bezel may be rotated for zero setting
- Sled is hardened and ground for long, accurate life and has two long-line contacts in constant alignment with the cylinder wall. These reference points are spring loaded, making the gage self-centering and non-collapsible.
- The locking screw (stem protruding above the dial) clamps the contact points in position for measurement with a micrometer
- The handle can be locked in any perpendicular or angular position and may also be transformed by a slight turn into a toggle joint with a wide sweep
- Extra handles may be ordered to make a long extension

452 Cylinder Gages					
Cat. No.	**EDP**	**Range**	**Graduation**	**Dial Reading**	**One Rev.**
452B	52339	2-1/2–6"	.001"	0-100	.100"
452B-9	52341	2-1/2–9"			
Accessories					
Cat. No.	**EDP**	**Length**	**Description**		
PT06722	72275	8-5/8"	Handle Extension for 452B and 452B-9		

Height from contact points to top of handle is 10" (250mm).

452B

Special Function Indicators

Dial Indicator Diameter Gages

These gages measure both outside and inside diameters by comparing dimensions to gage blocks or an adjustable setting master. Each gage consists of a strong rectangular box beam with a sensitive gaging contact at one end and a reference gaging contact at the other.

- All of the diameter gages have these features:
- The sensitive contact transfers dimensions to the dial indicator through a linear friction-free mechanism
- There are two gage feet at the reference end of the gage and one foot at the sensitive end of the gage to set the gage on the work and align the contacts
- Gage depth is set by adjusting the gage feet up or down
- A lever-actuated reverse mechanism loads the gage for either inside or outside diameter measurements
- The gage contacts are easily changed to I.D. or O.D. gaging by turning them end for end
- Unless otherwise specified, the dial indicator sent with the gage reads in .0005" increments with a total range of ±.030". The dial has a double row of graduations reading in opposite directions – minus in red and plus in black

On the following pages we list our standard line but to suit other needs we also can furnish the following:

1. Any length that is required
2. Any dial indicator with inch or millimeter reading
3. 717 Electronic Gage Amplifier and Gaging Head in place of the indicator
4. Electronic indicators can also be furnished on any of these gages except the 1102
5. Special contact shapes
6. Gaging contacts with more depth

Indicator Diameter Gages

1102, 1102M Dial Indicator Diameter Gages

1-12"/25-300MM

This is a light, easy-to-handle gage that is a workhorse in its range. Approximate weight is 1lb, 12oz. (0.8kg). The gaging depth can be set within a range of 0-1" (0-25mm) by adjusting the rest foot. Dial indicators are the 81-136-623 Inch Reading (.0005") or 81-181-623 Millimeter Reading (0.01mm) models.

The gage should be checked against our 1127 Master for a precise reference standard during production gaging (See the following pages). Also available on request with .0001" or 0.002mm graduations.

1102 and 1102M Dial Indicator Diameter Gages			
Cat. No.	**EDP**	**Length Range**	**Height Adjustment**
1102	56134	1-12" (.0005" Indicator)	0-1"
1102-1	69004	1-12" (.0001" Indicator)	0-1"
1102M	65020	25-300mm	0-25mm
Case for 1102 and 1102M Dial Indicator Diameter Gages			
Cat. No.	**EDP**	**Description**	
1102ZZ	56136	Storage Case to Hold Both Gage and 1127 Master	

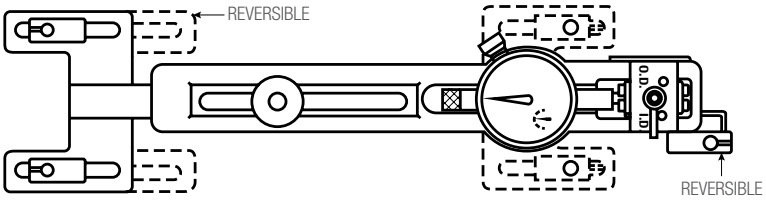

1102 and 1102M Dial Indicator Diameter Gages	
Photo Key	**Description**
A	Range Lock Screw
B	I.D.-O.D. Preload Reversing Mechanism Lever
C	Rest Foot
D	Reference Contact
E	Sensitive Contact

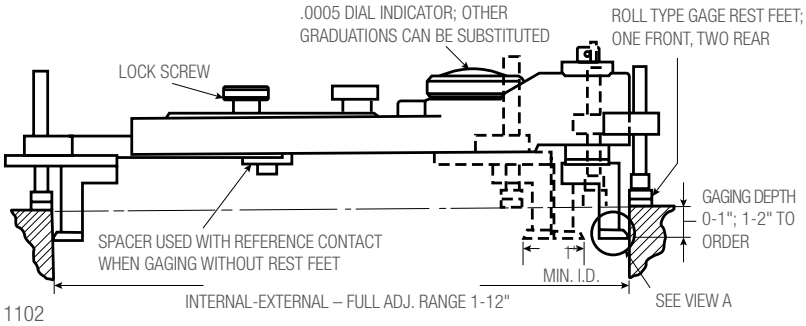

STANDARD CONTACTS FURNISHED WITH GAGE

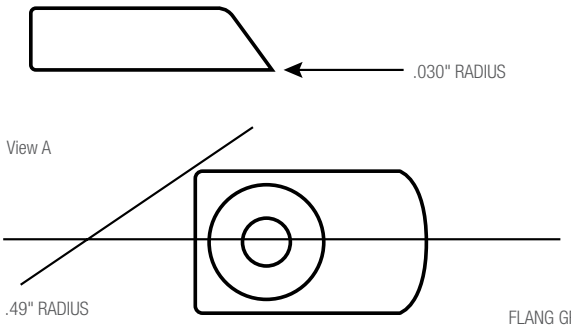

SPECIAL CONTACTS DESIGNED TO ORDER

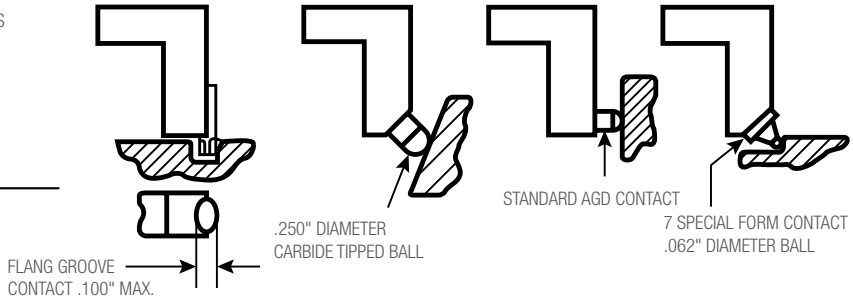

Indicator Diameter Gages

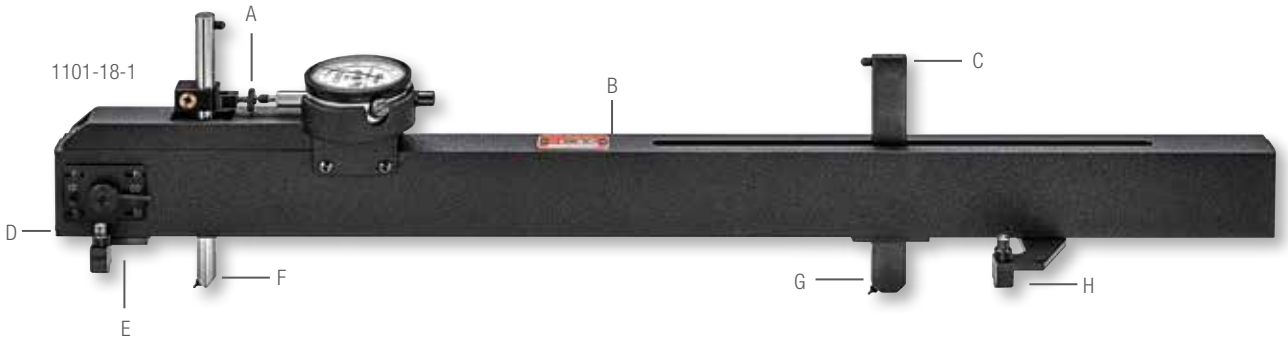

1101, 1101M Dial Indicator Diameter Gages

12-60"/300-1500MM

These gages allow for measurement beyond the size range of our 1102 models. Each gage adjusts a full 6" or 150mm. The contact carriers are vertically adjustable to handle various work depth. Special contacts are available.

This tool has dowel (line) contacts at one end of the gage feet, and a button (point) contact gage at the other end of the feet. These can be reversed as needed and the gaging depth can be set within a range of 2-3/4" or 70mm.

This gage should be checked against our 1126 Master for a precise reference standard during production gaging (See the following pages).

1101 and 1101M Dial Indicator Diameter Gages	
Photo Key	Description
A	Dial Indicator Fine-Adjusting Screw
B	Beam – Rectangular Box Section
C	Contact for Added Applications
D	I.D.-O.D. Preload Reversing Mechanism Lever
E	Combination Dowel/Button Rest Feet
F	Sensitive Contact
G	Reference Contact
H	Mounting Plate with Combination Dowel and Button Rest Feet

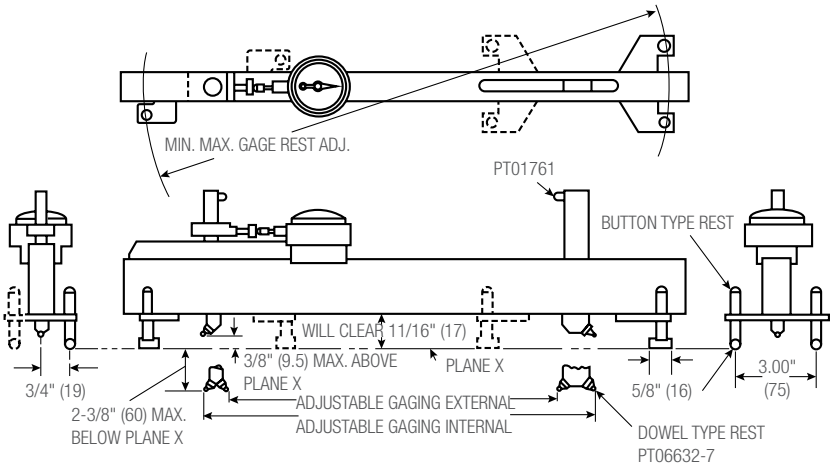

1101 and 1101M Dial Indicator Diameter Gages									
Length		Inch Reading - .0005" Graduations		Millimeter Reading - .01mm Graduations		Inch Reading- .0001" Graduations		Millimeter Reading - .002mm Graduations	
in	mm	Cat. No.	EDP	Cat. No.	EDP	Cat. No.	EDP	Cat. No.	EDP
12-18	300-450	1101-18	53144	1101M-450	65015	1101-18-1	69005	1101M-450-2	69021
18-24	450-600	1101-24	53146	1101M-600	65016	1101-24-1	69006	1101M-600-2	69022
24-30	600-750	1101-30	53148	1101M-750	65017	1101-30-1	69007	1101M-750-2	69023
30-36	750-900	1101-36	53150	1101M-900	65018	1101-36-1	69008	1101M-900-2	69024
36-42	900-1050	1101-42	53152	1101M-1050	65019	1101-42-1	69009	1101M-1050-2	69025
42-48	1050-1200	1101-48	53154	1101M-1200	65021	1101-48-1	69010	1101M-1200-2	69026
48-54	1200-1350	1101-54	53156	1101M-1350	65022	1101-54-1	69011	1101M-1350-2	69027
54-60	1350-1500	1101-60	53158	1101M-1500	65023	1101-60-1	69012	1101M-1500-2	69028
Gaging Contact Range:		±.050"		±1.3mm		±.050"		±1.3mm	

Sent without case unless otherwise ordered. To order case, specify the Catalog and "ZZ" (For example: 1101ZZ-18).

Indicator Diameter Gages

1100, 1100M Heavy-Duty Dial Indicator Diameter Gages

12-60"/300-1500MM

These gages combine heavy-duty construction features with adaptability for a wide range of internal and external measurements. The adjustable dowel rest legs ride on slotted mounting plates for horizontal adjustment. Each of the legs are vertically adjustable to obtain the proper rest position on the work and correct alignment on the gaging contacts. 2" or 50 mm range is the vertical adjustment.

The gaging contacts are radiused but may be modified by request to suit special gaging conditions.

The indicator and its housing can be rotated through to 360º so that the indicator may be read at the most convenient angle. The gage should be checked against our 1126 Master for a precise reference standard during production gaging (See the following pages).

1100 and 1100M Heavy-Duty Dial Indicator Diameter Gages	
Photo Key	**Description**
A	I.D.-O.D. Preload Reversing Mechanism Lever
B	Tamper Proof Dial Indicator Fine-Adjust Screw
C	Beam – Rectangular Box Section
D, E	Adjustable Dowel Rest Leg
F, K	Dowel Rest
G	Sensitive Contact
H	Slotted Rest Leg Mounting Plate
I	Reference Contact
J	Reference Contact Carrier

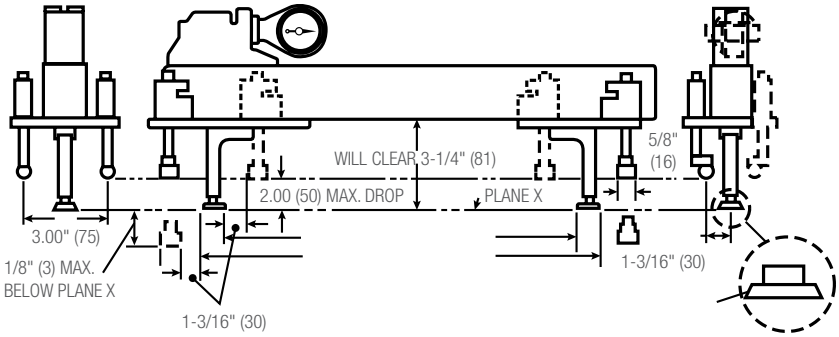

1101 and 1101M Dial Indicator Diameter Gages									
Length		**Inch Reading - .0005" Graduations**		**Millimeter Reading - .01mm Graduations**		**Inch Reading - .0001" Graduations**		**Millimeter Reading - .002mm Graduations**	
in	**mm**	**Cat. No.**	**EDP**	**Cat. No.**	**EDP**	**Cat. No.**	**EDP**	**Cat. No.**	**EDP**
12-18	300-450	1101-18	53144	1101M-450	65015	1101-18-1	69005	1101M-450-2	69021
18-24	450-600	1101-24	53146	1101M-600	65016	1101-24-1	69006	1101M-600-2	69022
24-30	600-750	1101-30	53148	1101M-750	65017	1101-30-1	69007	1101M-750-2	69023
30-36	750-900	1101-36	53150	1101M-900	65018	1101-36-1	69008	1101M-900-2	69024
36-42	900-1050	1101-42	53152	1101M-1050	65019	1101-42-1	69009	1101M-1050-2	69025
42-48	1050-1200	1101-48	53154	1101M-1200	65021	1101-48-1	69010	1101M-1200-2	69026
48-54	1200-1350	1101-54	53156	1101M-1350	65022	1101-54-1	69011	1101M-1350-2	69027
54-60	1350-1500	1101-60	53158	1101M-1500	65023	1101-60-1	69012	1101M-1500-2	69028
Gaging Contact Range:		±.050"		±1.3mm		±.050"		±1.3mm	

Sent without case unless otherwise ordered. To order case, specify the Catalog and "ZZ" (For example: 1101ZZ-18).

Indicator Diameter Gages

1127 Internal-External Adjustable Setting Master for Starrett 1102 Diameter Gages

EDP 56135

This set master is used with our 1102 Diameter Gages. The internal adjustment range is 1–12" (25-300mm) and external adjustment is 5-1/4–12" (133-300mm). Storage case is available to hold both the gage and master (Catalog 1102ZZ, EDP 56136).

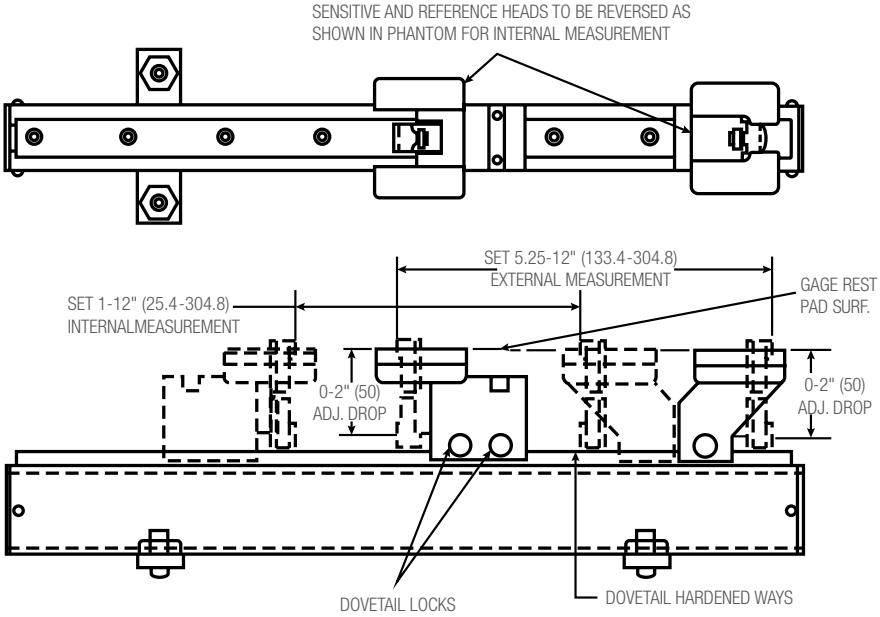

1127 Internal-External Adjustable Setting Master for Starrett 1102 Diameter Gages	
Photo Key	**Description**
A	Sensitive Head
B	Hardened Rest Platen
C	Anvil
D	Reference Head
E	Fixed Single Point Button Rest
F	Beam – Rectangular Box Section
G	Leveling Screws (2)

Setting Masters For Dial Indicator Diameter Gages

These setting masters are used to check and reset diameter gages under production gaging conditions. Each master consists of a rigid box beam with reference and sensitive heads which are individually adjustable along dovetail ways.

A platen on each head locates the diameter gage from its feet. The position of the gage contacts is matched by the anvils on the masters which are vertically adjustable. The reference head anvil has a fine adjustment for final settings, plus a restrictor to help position the gage in the master.

Both heads can be reversed for I.D. or O.D. settings. Each master has a fixed single point rest and two leveling screws which provide a three-point suspension. All contact and working surfaces are hardened and ground.

The setting procedure is as follows: set the diameter gage precisely to gage blocks or height gages. Then, using the diameter gage, set the master which can then be used as a precise reference standard for the diameter gage during production gaging.

Indicator Diameter Gages

1126 Internal-External Adjustable Setting Masters for Starrett 1100 and 1101 Diameter Gages

12-60"/300-1500MM

These set masters are used to check and reset Starrett 1100 and 1101 Diameter Gages under production gaging conditions. The range is from 12-60" or 300-1500mm.

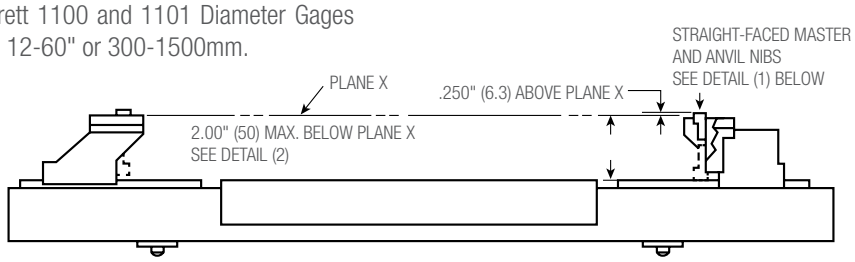

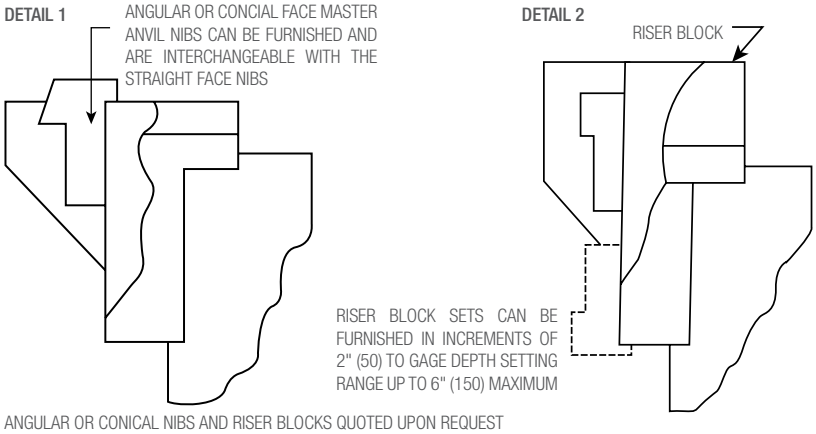

ANGULAR OR CONICAL NIBS AND RISER BLOCKS QUOTED UPON REQUEST

1126 Internal-External Adjustable Setting Masters for Starrett 1100 and 1101 Diameter Gages

Photo Key	Description
A	Sensitive Head
B	Hardened Rest Platen
C	Anvil
D	Reference Head
E	Leveling Screws (2)
F	Beam – Rectangular Box Section
G	Fixed Single Point Button Rest

1126 Internal-External Adjustable Setting Masters for Starrett 1100 and 1101 Diameter Gages

Cat. No.	EDP	Case Only Cat. No.	Length Range in	Length Range mm	For Use With Diameter Gage Nos. in	mm	in	mm
1126-18	53160	1126ZZ-18	12-18	300-450	1100-18	1100M-450	1101-18	1101M-450
1126-24	53161	1126ZZ-24	18-24	450-600	1100-24	1100M-600	1101-24	1101M-600
1126-30	53162	1126ZZ-30	24-30	600-750	1100-30	1100M-750	1101-30	1101M-750
1126-36	53163	1126ZZ-36	30-36	750-900	1100-36	1100M-900	1101-36	1101M-900
1126-42	53164	1126ZZ-42	36-42	900-1050	1100-42	1100M-1050	1101-42	1101M-1050
1126-48	53165	1126ZZ-48	42-48	1050-1200	1100-48	1100M-1200	1101-48	1101M-1200
1126-54	53166	1126ZZ-54	48-54	1200-1350	1100-54	1100M-1350	1101-54	1101M-1350
1126-60	53167	1126ZZ-60	54-60	1350-1500	1100-60	1100M-1500	1101-60	1101M-1500

Setting masters for larger diameters are also available by request – priced on the application.

In addition to the products detailed in this section, we have made many other special function gages to suit a wide variety of our costomers' specific requirements.

If you have a special application, we invite you to submit your drawings and specifications to our Special Order Department at 121 Crescent Street, Athol, MA 01331, USA. We will be happy to provide a prompt quotation.

BORE GAGES

Electronic Bore Gages

781BXT AccuBore® Electronic Bore Gages with Output

.080"-8"/2-200MM

AccuBore is a high-quality, trigger-activated, two-point and three-point contact bore gaging system with extended range. Its convenient single-hand operation provides speed and control. Simply squeeze the trigger, insert the gage into the bore and release the trigger for an instant reading from the large, easy-to-read digital display.

What makes AccuBore superior to other gages are features like the mechanically-driven parallel anvils which extend simultaneously, establishing a more true alignment to the axis of the bore. This provides consistent pressure, resulting in more accurate readings than models with spring-driven contacts which are subject to pressure variations.

Speed and convenience are further enhanced by the repositionable AccuBore® indicator, which may be swiveled and rotated for left, right hand or even vertical viewing. The gage also features a set of "Go/No-Go" lights in the readout display that quickly indicates whether a bore measurement is within a preset tolerance.

Features

- Bluetooth® capability
- Single-hand operation with right- and left-hand viewing flexibility
- Large, easy-to-read display
- Enhanced wear life with carbide-faced contacts – available from 1/2" to 8"
- Convenient "Go/No-Go" tolerance indicator lights
- True alignment with mechanically-driven parallel anvils
- Resolution .00005" (0.001mm)
- Accuracy of up to .00015" (.004mm)
- Push button inch/metric conversion
- Preset and preset recall
- Hold, max/min and zeroing capabilities
- Blind bore measurement is standard for .50" (12.7mm) and above
- Specialized heads available for thread, groove and other non-standard measurements on request
- Output capability for Statistical Process Control (SPC) analysis. Download data via USB to a PC or RS232 connection.

781BXTZ-138

Bore Gage Measuring Tips

Whether to use a two-point or three-point contact measuring tool is usually a matter of preference, but there are some differences.

A two-point contact rod-type inside micrometer is usually lighter, easier to handle, and more versatile over long ranges from approximately 6-107" (150-2700mm).

Any two-point contact micrometer, regardless of range, can probe a hole better to find the geometry of that hole than a three-point contact.

Most three-point contact tools have setting rings to ensure accuracy. If you desire very close tolerance work with two-point contact inside micrometers, it is recommended that they be set to a ring gage or to an outside micrometer.

A three-point contact micrometer has an advantage in that it can be seated in position more quickly than a two-point contact tool.

Usually these tools can also be read to a finer accuracy. The three-point tool will tell the maximum true diameter that can enter the hole a little faster than a two-point contact tool.

Micrometer heads used in these tools are accurate to ±.0001" or 0.002mm, but overall accuracy on tools that add rods is dependent on good practice and technique.

To ensure accuracy, these practices should be followed:

- Always make sure that there are no specks of dirt between the clamping surfaces of the rods and micrometer heads
- Tighten all rods uniformly, not too tightly, not too loosely, but a fairly firm assembly
- Assembling long sections should be done vertically or, with support, horizontally
- Because temperature can affect long rods used in these tools, they should be assembled in the same environment in which they will be used

Output jack enables collection of measurement data for SPC analysis

AccuBore XT's indicator can be rotated, allowing easy reading from either the right or left hand, or when accessing difficult to reach holes

Sets include gage, contacts, setting rings, instructions, certificate of calibration and a 3v lithium battery in a protective carrying case

781BXT AccuBore Electronic Bore Gages with Output – 2-Point Contact (.080-.250" (2-6mm) Range)

Cat. No.	EDP	Range in	Range mm	Accuracy in	Accuracy mm	Approx Meas. Depth in	Approx Meas. Depth mm	Ring Diameter in	Ring Diameter mm
781BXTZ-100	73017	.080-.100	2-2.5	.00015	.004	3/8	9	.100	2.54
781BXTZ-120	73016	.100-.120	2.5-3						
781BXTZ-160	73014	.120-.160	3-4	.00015	.004	1/2	12	.160	4.06
781BXTZ-200	73012	.160-.200	4-5	.00015	.004	3/4	18	.200	5.08
781BXTZ-250	73011	.200-.250	5-6						

781BXT AccuBore® Electronic Bore Gages with Output – 3-Point Contact (1/4-8" (6-200mm) Range) – Fixed Anvils

Cat. No.	EDP	Range in	Range mm	Accuracy in	Accuracy mm	Approx Meas. Depth in	Approx Meas. Depth mm	Ring Diameter in	Ring Diameter mm
781BXTZ-312	73009	1/4-5/16	6-8	.00015	.004	2-1/4	58	.3125	7.94
781BXTZ-375	73007	5/16-3/8	8-10						
781BXTZ-500	73004	3/8-1/2	10-12.5	.00015	.004	2-1/4	58	.500	12.7
781BXTZ-625	73002	1/2-5/8	12.5-16	.00015	.004	2-3/8	62	.500	12.7
781BXTZ-750	73000	5/8-3/4	16-20					.750	19.05
781BXTZ-1	73018	3/4-1	20-25	.00015	.004	2-5/8	66	.750	19.05
781BXTZ-138	73015	1-1-3/8	25-35					1.375	34.93
781BXTZ-2	73013	1-3/8-2	35-50	.00015	.004	3-1/16	80	1.375	34.93
781BXTZ-258	73010	2-2-5/8	50-65	.0002	.005	3-1/16	80	2.625	65.68
781BXTZ-314	73008	2-5/8-3-1/4	65-80					3.250	82.55
781BXTZ-4	73006	3-1/4-4	80-100	.0002	.005	3-3/8	85	3.250	82.55
781BXTZ-5	73005	4-5	100-125	.00025	.006	4	100	5.0	127.00
781BXTZ-6	73003	5-6	125-150						
781BXTZ-7	73001	6-7	150-175	.0003	.007	4	100	7.0	177.80
781BXTZ-8	72999	7-8	175-200						

Pistol Grip Gage Only with Indicator*

Cat. No.	EDP	Range in	Range mm
781BXTP-250	73021	.080-.250	2-6
781BXTP-750	73019	1/4-3/4	6-20
781BXTP-4	73020	3/4-4	20-100
781BXTP-12**	73022	4-8	100-200

Larger sizes available on special order.
Gages are also available with dial indicators on special order.
* Does not include heads, rings, etc.
** Heads above 8" available on special order.

Electronic Bore Gages

781BXT AccuBore® Electronic Bore Gages

See specifications on previous pages

781BXT AccuBore Electronic Bore Gage Set – 2-Point Contact (.080-.250" [2-6 mm] Range)					
Cat. No.	EDP	Range in	Range mm	Number of Heads	Number of Rings
S781BXTBZ	72998	.080-.250	2-6	5	3

781BXT AccuBore Electronic Bore Gage Sets –3-Point Contact (.250-8" [6-200mm] Range – Fixed Anvils)					
Cat. No.	EDP	Range in	Range mm	Number of Heads	Number of Rings
S781BXTCZ	72997	.250-.375	6-10	2	1
S781BXTHZ	72992	.250-.750	6-20	5	3
S781BXTDZ	72996	.375-.750	10-20	3	2
S781BXTEZ	72995	.750-2.00	20-50	3	3
S781BXTJZ	72991	.750-4.00	20-100	6	4
S781BXTFZ	72994	2.00-4.00	50-100	3	2
S781BXTKZ	72990	4.00-6.00	100-150	2	1
S781BXTGZ	72993	4.00-8.00	100-200	4	4
S781BXTLZ	72989	6.00-8.00	150-200	2	1

Larger sizes available on special order.
Gages are also available with dial indicators on special order.

Accessories for 781BXT Electronic Internal Micrometers				
Part No.	EDP	Description	Required for Initial Bluetooth® Connection 1 Device	> 1 Devices
PT61055	72941	770B Output Cable to USB		
PT61057	72942	770B Output Cable to USB with Footswitch		
		Free VMUX Software - 1 channel; visit starrett.com	x	
PT02497	73447	Bluetooth® 4.0 dongle to PC VMUX Lite (1channel); VMUX standard (8 channels)	x	x
PT60996	72945	VMUX Standard Software (up to 32 tools)		x
PT99492	65650	Two 3-Volt Batteries, CR2032		
PT02498	73024	Bluetooth® 4.0 Indicator for 0.080-0.75" gages		
PT02499	73025	Bluetooth® 4.0 Indicator for 0.75-12" gages		

Larger sizes available on special order.
Gages are also available with dial indicators on special order.

Extensions from 2-1/2 - 6" can be added to the 781XT, enabling internal measurements in deep hole bores

781BXTZ-500

S781BXTGZ

770BXTZ-250 Bore Gage with PT24272 Depth Stop Collar

Electronic Bore Gages

770BXT Electronic Bore Gages with IP67 Protection (with output)

.080-12"/2-300MM

770BXT Electronic Internal Micrometers provide IP67 level of protection against coolant, water, dirt and dust in hostile shop environments. In addition, they offer extended travel, reducing the need to exchange anvils.

770BXTZ-138

Features

- Wide measurement range without changing anvils
- Resolution to .00005" (0.001mm)
- Large high-contrast LCD digital readout is easy to read and reduces error
- RS232, USB, wireless output
- Carbide measuring faces on sizes above 1/2" (12.5mm) diameter
- Extensions available for deep holes
- Includes instant inch/millimeter conversion and preset + and - functions
- Precision ratchet stop provides correct contact pressure for accurate readings
- Each micrometer bore gage with head comes with a wooden case, complete with setting ring, contacts, adjusting wrench, spare battery, and instructions

780XT Electronic Internal Micrometers, 2-Point Contact (.080-.250" (2-6mm) Range)

Cat. No.	EDP	Range in	Range mm	Accuracy in	Accuracy mm	Approx. Meas. Depth in	Approx. Meas. Depth mm	Ring Diameter in	Ring Diameter mm
770BXTZ-100	72539	.080-.100	2-2.5	.00015	.004	3/8	9	.100"	2.54
770BXTZ-120	72540	.100-.120	2.5-3						
770BXTZ-160	72541	.120-.160	3-4	.00015	.004	15/32	12	.160"	4.06
770BXTZ-200	72542	.160-.200	4-5	.00015	.004	3/4	18	.160"	4.06
770BXTZ-250	72543	.200-.250	5-6	.00015	.004	3/4	18	.200"	5.08

780XT Electronic Internal Micrometers, 3-Point Contact (1/4-12" (6-300mm) Range), Fixed Anvils

Cat. No.	EDP	Range in	Range mm	Accuracy in	Accuracy mm	Approx. Meas. Depth in	Approx. Meas. Depth mm	Ring Diameter in	Ring Diameter mm
770BXTZ-312	72544	1/4 – 5/16	6-8	.00015	.004	2-1/4	58	.3125	7.94
770BXTZ-375	72545	5/16 – 3/8	8-10						
770BXTZ-500	72546	3/8 – 1/2	10-12.5	.00015	.004	2-1/4	58	.500	12.7
770BXTZ-625	72547	1/2 – 5/8	12.5-16	.00015	.004	2-3/8	62	.500	12.7
770BXTZ-750	72548	5/8 – 3/4	16-20	.00015	.004	2-5/8	66	.750	19.05
770BXTZ-1	72549	3/4 – 1	20-25						
770BXTZ-138	72562	1 – 1-3/8	25-35	.00015	.004	3-1/16	80	1.375	34.93
770BXTZ-2	72563	1-3/8 – 2	35-50						
770BXTZ-258	72564	2 – 2-5/8	50-65	.00020	.005	3-1/16	80	2.625	65.68
770BXTZ-314	72566	2-5/8–3-1/4	65-80						
770BXTZ-4	72567	3-1/4 – 4	80-100	.00020	.005	4	100	3.250	82.55
770BXTZ-5	72568	4 – 5	100-125	.00025	.006	4-1/2	115	5.0	127.00
770BXTZ-6	72569	5 – 6	125-150						
770BXTZ-7	72570	6 – 7	150-175	.00030	.007	4-1/2	115	7.0	177.80
770BXTZ-8	72571	7 – 8	175-200						
770BXTZ-9	72572	8 – 9	200-225	.00030	.007	4-5/8	118	9.0	228.60
770BXTZ-10	72573	9 – 10	225-250						
770BXTZ-11	72574	10 – 11	250-275	.00035	.009	4-5/8	118	11.0	279.40
770BXTZ-12	72575	11 – 12	275-300						

See next page for sets.

Accessories for 770BXT Electronic Internal Micrometers

Part No.	EDP	Description	Required for Initial Bluetooth® Connection 1 Device	Required for Initial Bluetooth® Connection > 1 Devices
PT61055	72941	770B Output Cable to USB		
PT61057	72942	770B Output Cable to USB with Footswitch		
		Free VMUX Software - 1 channel; visit starrett.com	x	
PT02497	73447	Bluetooth® 4.0 dongle to PC Vmux Lite (1channel); VMUX standard (8 channels)	x	x
PT60996	72945	VMUX Standard Software (up to 32 tools)		x
PT99492	65650	Two 3-Volt Batteries, CR2032		

See next page for sets.

IP PROTECTION

An IP number is composed of two numbers, the first referring to protection against solid objects and the second against liquids.

First number 6: Totally protected against dust

Second number 7: Protection against submersion in water under standardized conditions of pressure for 30 minutes

Electronic Bore Gages

770BXT Electronic Bore Gages with IP67 Protection (with output)

See specifications on previous page

770BXT Electronic Internal Micrometer Sets, 2-Point Contact (.080-.250" [2-6mm] Range)					
		Range			
Cat. No.	EDP	in	mm	Number of Heads	Number of Rings
S770BXTBZ	72576	.080-.250	2-6		

770BXT Electronic Internal Micrometer Sets, 3-Point Contact (1/4-8" [6-200mm] Range), Fixed anvils					
		Range			
Cat. No.	EDP	in	mm	Number of Heads	Number of Rings
S770BXTCZ	72577	1/4-3/8	6-10	2	1
S770BXTDZ	72578	3/8-3/4	10-20	3	2
S770BXTEZ	72579	3/4-2	20-50	3	2
S770BXTFZ	72580	2-4	50-100	3	2
S770BXTKZ	72581	4-6	100-150	2	1
S770BXTGZ	72582	4-8	100-200	4	2
S770BXTLZ	72583	6-8	150-200	2	1

S770BXTKZ

Vernier Bore Gages

78XT Bore Gages

.080-12"/1-300MM

The 78XT Bore Gages feature extended travel, reducing the need to exchange anvils. The ground contact points seat the internal micrometer faster and more accurately than the spherical contacts found in other gages. These rugged and accurate internal micrometers are available individually or in economical sets from .080-12" (2-300mm).

78XT Bore Gages, 2-Point Contact (.080-.250" Range)

Cat. No.	EDP	Range (in)	Accuracy (in)	Approximate Measuring Depth (in)	Setting Ring Diameter (in)
78XTZ-100	68124	.080-.100	0.00015	3/8	.100
78XTZ-120	68125	.100-.120			
78XTZ-160	68126	.120-.160	0.00015	15/32	.160
78XTZ-200	68127	.160-.200	0.00015	3/4	.160
78XTZ-250	68128	.200-.250			.200

78XT Bore Gages, 3-Point Contact (1/4-12" Range)

Cat. No.	EDP	Range (in)	Accuracy (in)	Approximate Measuring Depth (in)	Setting Ring Diameter (in)
78XTZ-312	68129	1/4-5/16	.00015	2-1/4	.3125
78XTZ-375	68130	5/16-3/8			.3125
78XTZ-500	68131	3/8-1/2			.500
78XTZ-625	68132	1/2-5/8	.00015	2-7/16	.500
78XTZ-750	68133	5/8-3/4			.750
78XTZ-1	68134	3/4-1	.00015	2-5/8	.750
78XTZ-138	67674	1-1-3/8			1.375
78XTZ-2	67675	1-3/8-2	.00015	3-1/16	1.375
78XTZ-258	67676	2-2-5/8	.00020	3-1/16	2.625
78XTZ-314	67677	2-5/8-3-1/4			
78XTZ-4	67678	3-1/4-4	.00020	4	3.250
78XTZ-5	67679	4-5	.00025	4	5.0
78XTZ-6	67680	5-6	.00025	4-1/2	5.0
78XTZ-7	67681	6-7	.00030	4-1/2	7.0
78XTZ-8	67682	7- 8			7.0
78XTZ-9	67857	8-9			9.0
78XTZ-10	67858	9-10	.00030	4-5/8	9.0
78XTZ-11	67859	10-11	.00035	4-5/8	11.0
78XTZ-12	67860	11-12			

78XT Sets, 2-Point Contact (.250" Range)

Cat. No.	EDP	Range (in)	Number of Heads	Number of Rings
S78XTBZ	68152	.120-.250	3	2

78XT Sets, 3-Point Contact (1/4-4" Range)

Cat. No.	EDP	Range (in)	Number of Heads	Number of Rings
S78XTCZ	68153	1/4-3/8	2	1
S78XTDZ	68154	3/8-3/4	3	2
S78XTEZ	67683	3/4-2	3	2
S78XTFZ	67684	2-4	3	2

78XTZ-2

Features

- Wide measurement range without changing anvils
- Resolution from .0001" (0.0025mm) on the 2-point contact toolsup to 3/4" (20mm) and .00025" (0.005mm) on the 3-point contact tools ranging from 3/4"-12" (20mm - 300mm)
- Tungsten carbide measuring faces on all 3-point heads above 1/2" (12.5mm)
- Ratchet stop ensures consistent measurements
- Self-centering contacts for true readings
- Blind bore measuring capability above 1/2" (12.5mm) diameter
- Extensions available up to 6" (150mm) for deep hole measuring
- Setting rings included
- Depth stop/collar also available for .080"-.250" (1-6mm) range
- Each micrometer bore gage is furnished in a case, complete with setting ring, contacts, wrenches, and instructions

78XTZ-138 measuring a bore.

Electronic Bore Gages

78MXT Bore Gages

See specifications on previous page

78MXT Bore Gages, 2-Point Contact (1-6mm Range)					
Cat. No.	EDP	Range (mm)	Accuracy (mm)	Approximate Measuring Depth (mm)	Setting Ring Dia (mm)
78MXTZ-1.15	68135	1-1.15	0.003	6	1
78MXTZ-1.3	68136	1.15-1.3	0.003	6	1.3
78MXTZ-1.5	68137	1.3-1.5			
78MXTZ-1.75	68138	1.5-1.75	0.003	8	1.75
78MXTZ-2	68139	1.75-2			
78MXTZ-2.5	68140	2-2.5	0.004	9	2.5
78MXTZ-3	68141	2.5-3			
78MXTZ-4	68142	3-4	0.004	12	4
78MXTZ-5	68143	4-5	0.004	18	4
78MXTZ-6	68144	5-6	0.004	18	5
78MXT Bore Gages, 3-Point Contact (6-300mm Range)					
Cat. No.	EDP	Range (mm)	Accuracy (mm)	Approximate Measuring Depth (mm)	Setting Ring Dia (mm)
78MXTZ-8	68145	6-8mm	0.004	58	8
78MXTZ-10	68146	8-10mm			
78MXTZ-12.5	68147	10-12.5mm	0.004	58	12.5
78MXTZ-16	68148	12.5-16mm	0.004	62	12.5
78MXTZ-20	68149	16-20mm	0.004	62	20
78MXTZ-25	68150	20-25mm	0.004	66	20
78MXTZ-35	67861	25-35mm	0.004	66	35
78MXTZ-50	67862	35-50mm	0.004	80	35
78MXTZ-65	67863	50-65mm	0.005	80	65
78MXTZ-80	68650	65-80mm			
78MXTZ-100	67864	80-100mm	0.005	100	80
78MXTZ-125	67865	100-125mm	0.006	115	125
78MXTZ-150	67866	125-150mm			
78MXTZ-175	67867	150-175mm	0.007	115	175
78MXTZ-200	67868	175-200mm			
78MXTZ-225	67869	200-225mm	0.008	118	225
78MXTZ-250	67870	225-250mm			
78MXTZ-275	67871	250-275mm	0.009	118	275
78MXTZ-300	67872	275-300mm			

78MXT Sets, 2-Point Contact (2-6mm Range)				
Cat. No.	EDP	Range (mm)	Number of Heads	Number of Rings
S78MXTAZ	68155	2-3	2	1
S78MXTBZ	68156	3-6	3	2
78XT Sets, 3-Point Contact (6-100mm Range)				
Cat. No.	EDP	Range (mm)	Number of Heads	Number of Rings
S78MXTCZ	68157	6-10	2	1
S78MXTDZ	68158	10-20	3	2
S78MXTEZ	67873	20-50	3	2
S78MXTFZ	67874	50-100	3	2

78MXTZ-100

780MXTZ-150 in case

Additional Options for 781B, 770B, 78 Bore Gages

Spare Measuring Heads

Cat. No.	EDP	Range (in)
HEAD100	73075	0.080-0.100
HEAD120	73078	0.100-0.120
HEAD160	73080	0.120-0.160
HEAD200	73082	0.160-0.200
HEAD250	73083	0.200-0.250
HEAD312	73085	1/4-5/16
HEAD375	73087	5/16-3/8
HEAD500	73090	3/8-1/2
HEAD625	73092	1/2-5/8
HEAD750	73094	5/8-3/4
HEAD1	73073	3/4-1.0
HEAD138	73079	1-1-3/8
HEAD2	73081	1-3/8-2
HEAD258	73084	2-2 5/8
HEAD314	73086	2-5/8-3-1/4
HEAD4	73088	3-1/4-4
HEAD5	73089	4.0-5.0
HEAD6	73091	5.0-6.0
HEAD7	73093	6.0-7.0
HEAD8	73095	7.0-8.0
HEAD9	73096	8.0-9.0
HEAD10	73074	9.0-10.0
HEAD11	73076	10.0-11.0
HEAD12	73077	11.0-12.0

Spare Setting Rings

Cat. No.	EDP	Range (in)
RING100	73097	0.1000
RING160	73100	0.1600
RING200	73101	0.2000
RING312	73103	5/16
RING500	73106	1/2
RING750	73108	3/4
RING138	73099	1-3/8
RING258	73102	2-5/8
RING314	73104	3-1/4
RING5	73105	5
RING7	73107	7
RING9	73109	9
RING11	73098	11

Inreach Extensions for 770B, 781B, 781 Bore Gages

Extensions from 2-1/2 - 6" can be added to both the 770BXT and 78XT, enabling internal measurements in deep hole bores (Multiple extensions can also be used).

Internal Extensions

Cat. No.	EDP	Ext. Size in	Ext. Size mm	Fits Models	Model Size in	Model Size mm
78/782F	65484	2.5	63	78XT/770BXT/781BXT–312-375	1/4-3/8	6-10
78/782G	65485	3	75	78XT/770BXT/781BXT–375-500	3/8-1/2	10-12.5
78/782H	65486	4	100	78XT/770BXT/781BXT–625-750	1/2-3/4	12.5-20
78/782J	65487	6	150	78XT/770BXT/781BXT–1 thru 2	3/4-2	20-50
78/782K	65488	6	150	78XT/770BXT/781BXT–2 thru 12	2-12	50-300

78-782J with 770BZ-2

Special Bore Gage Measuring Heads

We offer several configurations of special purpose measuring heads for 780, and 781 Bore Gages, available by special order. Some, but not all, of these will also work with the 78 Bore Gages.

Groove Measuring Heads

- **Groove.** Available as a 2-point system for ovality measurement.
- Various 2-point anvil forms available with diameters from .080-12" (2-300mm).
- **Grooves.** Available as a 3-point system
- Various 3-point anvil forms available for diameters from .250-12" (6-300mm).

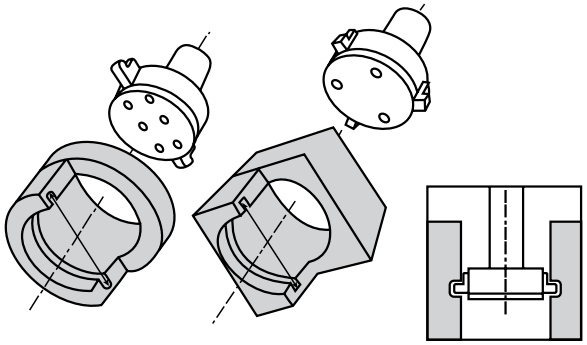

Thread Measuring Heads

Thread Measuring Heads are available as two point system from 8 to 5/16" (M4-8mm) and three point system from 3/8"-12" (9.5-300mm). Most forms available including UNC, UNF, UNJ, UNS, Buttress, Acme, Multi-start, LH and RH.

- **Thread.** Thread forms available as a 3-point system.
- **Internal.** To measure effective (functional) diameter, pitch diameter.
- Available as two point system from 8 to 5/16" (M4-8mm) Available as three point system from 3/8"-12" (9.5-300mm).
- Most forms available including UNC, UNF, UNJ, UNS, Buttress, Acme, Multi-start, LH and RH.

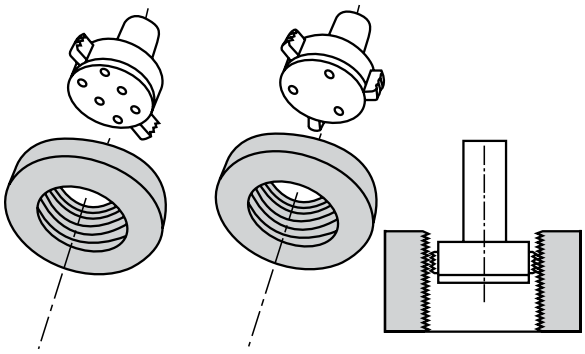

Spherical Radius Measuring Heads

- **Spherical Radius.** Available as 2-point to measure ovality or with 3-point contact.
- Available with diameters from .236-3.93" (6-100mm).
- **3-Point Spherical.** Available in .118-12" (3-300mm) range.
- Gives good repeatability even when somewhat out of line with bore center.

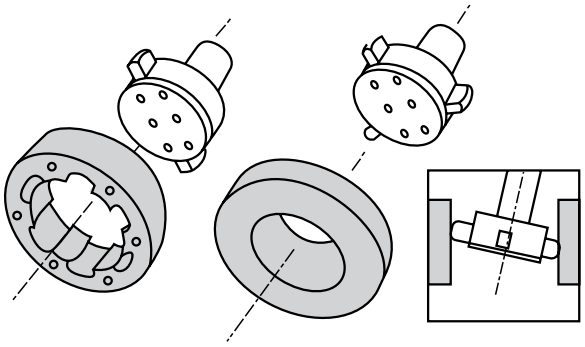

Dial Bore Gages

NEW!

3089 Dial Bore Gages

The 3089 Dial Bore Gages offer precision, a full compliment of features and excellent value.

3089 Dial Bore Gages			
Cat. No.	**EDP**	**Measuring Range**	**Probe Depth**
3089Z-131-715J	12456	0.7-1.5"	6"
3089Z-131-1424J	12457	1.4-2.4"	6"
3089Z-131-26J	12458	2-6"	6"
3089M-181-35J	72948	18-35mm	300mm
3089M-181-50J	72949	35-50mm	300mm
3089M-181-160J	72950	50-160mm	300mm
3089 Dial Bore Gage Sets			
Cat. No.	**EDP**	**Measuring Range**	**Set Includes**
3089Z-131-26J	13016	0.7-6"	3089Z-131-715J, 3089Z-131-1424J, 3089Z-131-26J
S3089MZ-181-160J	13015	50-160mm	3089M-181-35J, 3089M-181-50J, 3089M-181-160J
3089 Dial Bore Gage Accessories			
Cat. No.	**EDP**	**Description**	
3089-RS36B	72969	Bore gage setter with 36 Grade B gage blocks	

Features

- Ergonomic design with non-slip insulating grip
- Carbide contacts for extended wear
- 2-point contact
- All anvils laser marked for easy selection
- Gage chart for quick and easy anvil selection
- Includes sturdy aluminum case with cutouts for gage and all accessories
- Resolution: .0005"

3089Z-131-26J

3089-RS36B

3089Z-131-26J

Probes

Dial Bore Gages

82, 82M Dial Bore Gages

.107-1.565"/2.7-39.75MM

Dial bore gages are available in convenient sets or with individual probes and dial indicators. Each set consists of a dial indicator, a body and actuating rod, two adjusting wrenches and the probes as specified below.

The head may be ordered separately (includes dial indicator, body, and two adjusting wrenches). Individual probes can also be ordered as listed. All probes are furnished with an actuating rod. These gages are also available with electronic indicators by special order.

Measurements are taken by comparison so some type of set master should be used as a reference standard. We recommend setting as close to the hole being measured as possible, and this can be easily done with gage blocks or with a micrometer. We can also furnish master setting rings by request.

- The split-ball contact is self-centering and the two-point contact makes the gage useful for detecting hole geometry problems like taper, bell-mouth and out-of-roundness
- Reads to .0001" and 0.002mm
- Useful for controlling approach to tolerance without removing the workpiece from a machine
- Interchangeable probes are hard chrome plated and polished
- Sets furnished in attractive, protective case.

A Sets Individual Probes Only for 82 and 82M Bore Gages			
		Range	
Cat. No.	EDP	in	mm
82A2	66015	.107-.140	2.7-3.55
82A3	66016	.139-.172	3.55-4.35
82A4	66017	.171-.203	4.35-5.15
82A5	66018	.202-.234	5.15-5.95
82A6	66019	.233-.266	5.9-6.76
B Sets Individual Probes Only for 82 and 82M Bore Gages			
		Range	
Cat. No.	EDP	in	mm
82B2	66020	.217-.281	5.5-7.15
82B3	66021	.279-.344	7.1-8.75
82B4	66022	.342-.405	8.7-10.3
82B5	66023	.403-.469	10.25-11.9
82B6	66024	.467-.532	11.9-13.5
82B7	66025	.530-.594	13.5-15.1
C Sets Individual Probes Only for 82 and 82M Bore Gages			
		Range	
Cat. No.	EDP	in	mm
82C2	66028	.560-.690	14.2-17.5
82C3	66029	.685-.815	17.4-20.7
82C4	66030	.810-.940	20.6-23.9
82C5	66031	.935-1.065	23.75-27.05
82C6	66032	1.060-1.190	26.9-30.2
82C7	66033	1.185-1.315	30.1- 33.4
82C8	66034	1.310-1.440	33.3-36.6
82C9	66035	1.435-1.565	36.5-39.75

All probes come complete with actuating rod.

82 Dial Bore Gages								
Complete Sets		Heads						
Cat. No.	EDP	Cat. No.	EDP	Total Range	Number of Probes	Range Each Probe	Max. Bore Depth	Graduation
82AZ	55791	82AB1	66013	.107-.266"	5	.107-.140"; .139-.172"; .171-.203"; .202-.234"; .233-.266"	13/16"	.0001"
82BZ	55792	82AB1	66013	.217-.594"	6	.217-.281"; .279-.344"; .342-.405" .403-.469"; .467-.532"; .530-.594"	1-1/2" 1-3/4"	.0001"
82CZ	55793	82C1	66026	.560-1.565"	8	.560-.690"; .685-.815"; .810-.940" .935-1.065"; 1.060-1.190"; 1.185-1.315"; 1.310-1.440"; 1.435-1.565"	2-1/2" 5"*	.0001"
82M Dial Bore Gages								
Complete Sets		Heads						
Cat. No.	EDP	Cat. No.	EDP	Total Range	Number of Probes	Range Each Probe	Max. Bore Depth	Graduation
82MAZ	66010	82MAB1	66014	2.7-6.76mm	5	2.7-3.55mm; 3.55-4.35mm; 4.35-5.15mm; 5.15-5.95mm; 5.95-6.76mm	20.6mm	0.002 mm
82MBZ	66011	82MAB1	66014	5.5-15.1mm	6	5.5-7.15mm; 7.1-8.75mm; 8.7-10.3mm 10.25-11.9mm; 11.9-13.5mm; 13.5-15.1mm	38mm 44mm	0.002 mm
82MCZ	66012	82MC1	66027	14.2-39.75mm	8	14.2-17.5mm; 17.4-20.7mm; 20.6-23.9mm 23.75-27.05mm; 26.9-30.2mm; 30.1-33.4mm; 33.3-36.6mm; 36.5-39.75mm	63mm 125mm*	0.002 mm

* Includes insertion of gage body into bore.

Dial Bore Gages

84A, 84MA Dial Bore Gages

1-1/2 – 12-1/8"/38-317.5MM

These fractional bore gages allow for bore measurements beyond the size range of our 82 Bore Gage.

They are comparison gages and should be set with a master ring gage, gage blocks with parallel jaws, outside micrometers or vernier calipers. Ring gages are available by request, quoted by application. Good practice is to set the gage to zero, as near to the desired dimension as possible.

Gages are well balanced, easy to use and have the following features:

- Can be easily held to inspect bores and hole sizes without removing the workpiece
- An adjustable range screw and two centralizing plungers provide accurate, three-point contact for tool alignment in larger bores
- All contacts and centralized plungers are hardened tool steel for wear and spring-loaded for sensitivity
- The housing and knurled handle are aluminum for light weight and good balance
- Dial indicators have jewel bearings for sensitivity
- Bore depths are also available up to 12" (300mm) in 1" (25mm) increments on special order
- Furnished in finished wood case
- Available with longer reach lengths, carbide contacts or electronic indicators with output capability from our special order division

84AZ-111-5

84MAZ-161-6

84A Dial Bore Gages (1-1/2 - 12-1/2" Range)

Cat. No.	EDP	Total Range with Extension	Ext.	Range Each Extension (inches)	Max. Bore Depth	Plunger Travel	Indicator Grad.
84AZ-111-4J 84AZ-134-4J	00026 00030	1-1/2-3"	12	1.500-1.625", 1.625-1.750", 1.750-1.875", 1.875-2.000", 2.000-2.125", 2.125-2.250", 2.250-2.375", 2.375-2.500", 2.500-2.625", 2.625-2.750", 2.750-2.875", 2.875-3.000"	3"	.020"	.0001" .0005"
84AZ-111-5J 84AZ-134-5J	00027 00031	3-5-1/16"	11	3.000-3.187", 3.187-3.375", 3.375-3.562", 3.562-3.750", 3.750-3.937", 3.937-4.125", 4.150-4.312", 4.312-4.500", 4.500-4.687", 4.687-4.875", 4.875-5.062"	6"	.030"	.0001" .0005"
84AZ-111-6J 84AZ-134-6J	00028 00032	5-8"	4	5.000-5.750", 5.750-6.500", 6.500-7.250", 7.250-8.000"	6"	.030"	.0001" .0005"
84AZ-111-7J 84AZ-134-7J	00029 00033	8-12-1/2"	3	8.000-9.500", 9.500-11.000", 11.000-12.500"	7"	.030"	.0001" .0005"

84MA Dial Bore Gages (38.1 - 317.5mm Range)

Catalog No.	EDP	Total Range with Extension	Ext.	Range Each Extension (mm)	Max. Bore Depth	Plunger Travel	Indicator Grad.
84MAZ-161-4J 84MAZ-181-4J	00034 00038	3.175-76.2mm	12	38.1-41.28mm, 41.28-44.45mm, 44.45-47.62mm, 47.62-50.8mm, 50.8 -53.98mm, 53.98-57.15mm, 57.15-60.32mm, 60.32-63.5mm, 63.5-66.68mm, 66.68-69.85mm, 69.85-73.02mm, 73.02-76.2mm	75mm	0.51mm	0.002 mm 0.01 mm
84MAZ-161-5J 84MAZ-181-5J	00035 00039	76.2-128.58mm	11	76.2-80.96mm, 80.96-85.72mm, 85.72-90.49mm, 90.49-95.25mm, 95.25-100.01mm, 100.01-104.78mm, 104.78-109.54mm, 109.54- 114.3mm, 114.3-119.06mm, 119.06-123.82mm, 123.82-128.58mm	150mm	0.76mm	0.002 mm 0.01 mm
84MAZ-161-6J 84MAZ-181-6J	00036 00040	127-203.2mm	4	127-146.05mm, 146.05-165.1mm, 165.1-184.15mm, 184.15-203.2mm	150mm	0.76mm	0.002 mm 0.01 mm
84MAZ-161-7J 84MAZ-181-7J	00037 00041	203.2-317.5mm	3	203.2 - 241.3mm, 241.3 - 279.4mm, 279.4 - 317.5mm	175mm	0.76mm	0.002 mm 0.01 mm

Bore Gage Systems

AccuPlug™ Bore Gages

The AccuPlug consists of interchangeable indicators, handles, plugs, extensions and depth stops for a custom bore gage built specifically for your application needs.

The robust, easy to use AccuPlug range is designed to give the operator greater speed of use, unmatched measuring accuracy and superb repeatability, especially in harsh shop-floor environments. Advanced hand held ergonomics allied to an ingenious mechanical/electronic system render AccuPlug the easiest to operate Starrett bore gaging system to date. The flexible nature of the AccuPlug™ range means that they can be supplied fitted with easy to read electronic indicators (ideal for automatic data collection) or conventional analogue indicators.

Features

- Ranges from 0.2362 - 11.0236" (6 - 280mm)
- Tough, robust construction
- Easy-to-use
- High accuracy dedicated plug-gages
- Flexible, modular
- Hand-held measurement
- Cost-effective
- High visibility display
- Protective indicator shroud (with some indicators)
- All setting rings supplied as standard with UKAS calibration certificates
- Repeatability: ≤1µm
- Setting by means of a setting ring
- Quick and reliable measurement
- 2 - point measurement as standard
- Blind bore available
- Depth-stops available
- Extensions available for deeper bores
- Guide chamfer for easy entry into bore
- High durability, long-life plugs and contacts
- Easy to clean
- Plug body coatings: Hard-chrome (standard), T.i.N, Plain steel
- Measuring contacts: Tungsten carbide (standard), hard-chrome, ruby, ceramic

Bore Gage Systems

AccuPlug™ Bore Gages

AccuPlug™			
Regular Bore*			
Cat. No.	**in**	**mm**	**Thread**
802P-001	0.2362-0.7874	6-20	M6 x 0.75
802P-002	0.5906-0.9843	15-25	M10 x 1
802P-003	0.9843-1.3780	25-35	M10 x 1
802P-004	1.3780-1.7717	35-45	M10 x 1
802P-005	1.7717-2.3622	45-60	M10 x 1
802P-006	2.3622-3.1496	60-80	M10 x 1
802P-007	3.1496-3.9370	80-100	M10 x 1
802P-008	3.9370-4.9213	100-125	M10 x 1
802P-009	4.9213-5.9055	125-150	M10 x 1
802P-010	5.9055-6.8898	150-175	M10 x 1
802P-011	6.8898-7.8740	175-200	M10 x 1
802P-012	7.8740-8.8583	200-225	M10 x 1
802P-013	8.8583-9.8425	225-250	M10 x 1
802P-014	9.8425-11.0236	250-280	M10 x 1
Blind Bore*			
Cat. No.	**in**	**mm**	**Thread**
802BB-001	0.2362-0.7874	6-20	M6 x 0.75
802BB-002	0.5906-0.9843	15-25	M10 x 1
802BB-003	0.9843-1.3780	25-35	M10 x 1
802BB-004	1.3780-1.7717	35-45	M10 x 1
802BB-005	1.7717-2.3622	45-60	M10 x 1
802BB-006	2.3622-3.1496	60-80	M10 x 1
802BB-007	3.1496-3.9370	80-100	M10 x 1
802BB-008	3.9370-4.9213	100-125	M10 x 1
802BB-009	4.9213-5.9055	125-150	M10 x 1

*See Technical Specifications for plug ranges.

Indicators		
Cat No.	**EDP**	**Description**
2900-4	09983	0.00005"/.001mm Electronic Indicator, Full Function, 3/8" Stem
2900-4M	09988	0.001mm Electronic Indicator, Full Functions, 8mm Stem
F2720AD	49500	0.00005"/.001mm Electronic Indicator, Full Function with TIR Runout and Hold Function, 3/8" Stem, Analog Digital Display
F2720ADM	49504	0.00005"/.001mm Electronic Indicator, Full Function with TIR Runout and Hold Function, 8mm Stem, Analog Digital Display
647	00001	0.00005" Mechanical Indicator with 3/8" Stem
647M	00002	0.001mm Mechanical Indicator with 8mm Stem
M 10 Thread	**M 6 Thread**	**Mini Electronic Indicator**
802H10MI-001	802H6MI-001	With Shroud and M10 Holder Short 8mm Stem
802H10MI-002	802H6MI-002	With Shroud and M10 Holder Long 8mm Stem

Setting Rings

Cat. No.	Diameter Range in	mm
802RX-001	0.2362-0.3937	6-10
802RX-002	0.3937-0.7874	10-20
802RX-003	0.7874-0.9843	20-25
802RX-004	0.9843-1.1811	25-30
802RX-005	1.1811-1.5748	30-40
802RX-006	1.5748-1.9685	40-50
802RX-007	1.9685-2.3622	50-60
802RX-008	2.3622-2.7559	60-70
802RX-009	2.7559-3.1496	70-80
802RX-010	3.1496-3.5433	80-90
802RX-011	3.5433-3.9370	90-100
802RX-012	3.9370-4.5276	100-115
802RX-013	4.5276-5.1181	115-130
802RX-014	5.1181-5.7087	130-145
802RX-015	5.7087-6.2992	145-160
802RX-016	6.2992-6.6929	160-170
802RX-017	6.6929-7.0866	170-180
802RX-018	7.0866-7.4803	180-190
802RX-019	7.4803-7.8740	190-200
802RX-020	7.8740-8.2677	200-210
802RX-021	8.2677-8.6614	210-220
802RX-022	8.6614-9.0551	220-230
802RX-023	9.0551-9.4488	230-240
802RX-024	9.4488-9.8425	240-250
802RX-025	9.8425-10.2362	250-260
802RX-026	10.2362-10.6299	260-270
802RX-027	10.6299-11.0236	270-280

*Available with purchase of AccuPlug™

Depth Stop

Cat. No.	Diameter Range in	mm
802DS-001	2.3622-0.3347	6-8.5
802DS-002	0.3347-0.5118	8.5-13
802DS-003	0.5118-0.6890	13-17.5
802DS-004	0.6890-0.9843	17.5-25
802DS-005	0.9843-1.2795	25-32.5
802DS-006	1.2795-1.5748	32.5-40
802DS-007	1.5748-1.8701	40-47.5
802DS-008	1.8701-2.1654	47.5-55
802DS-009	2.1654-2.4606	55-62.5
802DS-010	2.4606-2.7559	62.5-70
802DS-011	2.7559-3.0512	70-77.5
802DS-012	3.0512-3.3465	77.5-85
802DS-013	3.3465-3.6417	85-92.5
802DS-014	3.6417-3.9370	92.5-100

Accessories

M 6 Thread Cat No.	Description	M 10 Thread Cat No.	Description
802H6-001	M6 Holder Short 3/8" Stem	802H10-001	M10 Holder Short 3/8" Stem
802H6-002	M6 Holder Long 3/8" Stem	802H10-002	M10 Holder Long 3/8" Stem
802H6-003	M6 Holder Short 8mm Stem	802H10-003	M10 Holder Short 8mm Stem
802H6-004	M6 Holder Long 8mm Stem	802H10-004	M10 Holder Long 8mm Stem
802E6-001	M6 100mm Extension	802E10-001	M10 100mm Extension

Bore Gage Systems

AccuPlug™ Bore Gaging Technical Specifications

Indicator Units 8mm and 3/8"

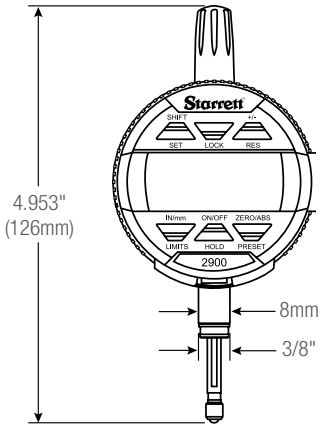

2900-4 and 2900-4M

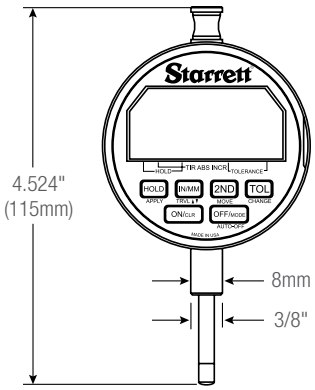

F2720AD and F2720ADM

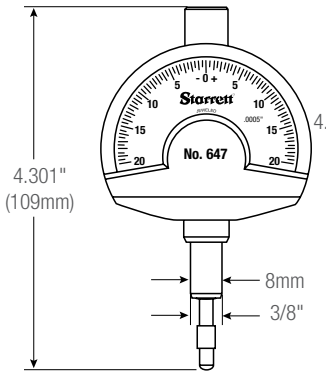

647 and 647M

Mini Indicator Units

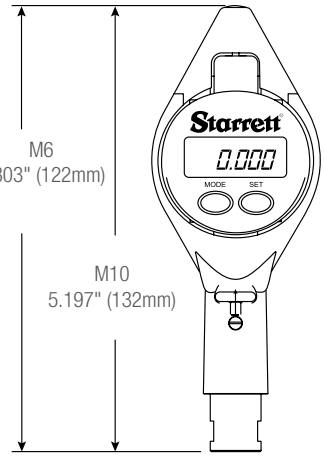

Mini indicator with shroud, short handle - M6 and M10

AccuPlugs

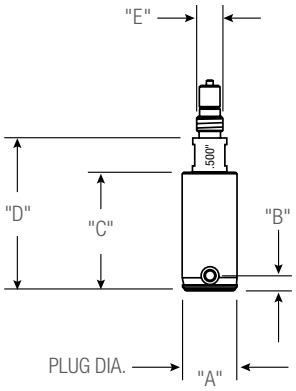

M6 AccuPlug

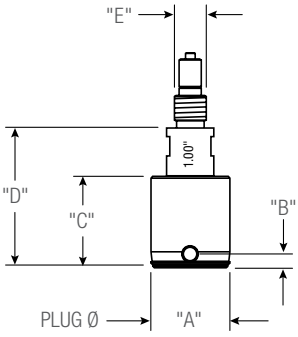

M10 AccuPlug

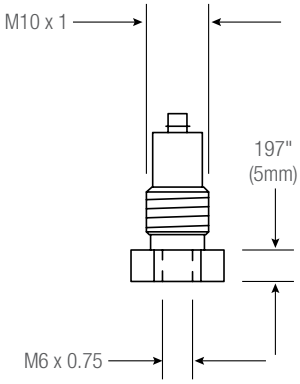

M6 to M10 Adapter

Accessories

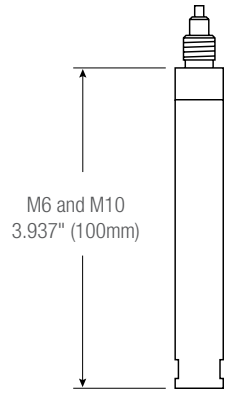

100mm Extension - M6 and M10

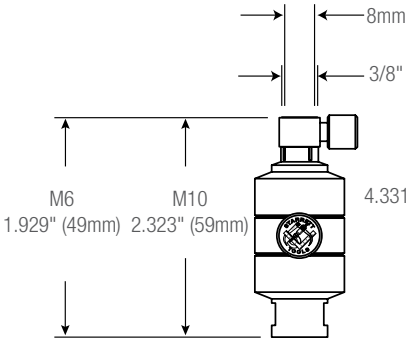

Short holder M6 and M10 with 3/8" or 8mm stem

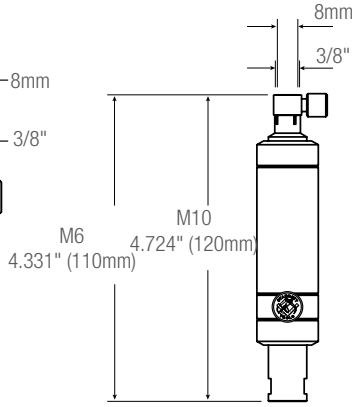

Long holder M6 and M10 with 3/8" or 8mm stem

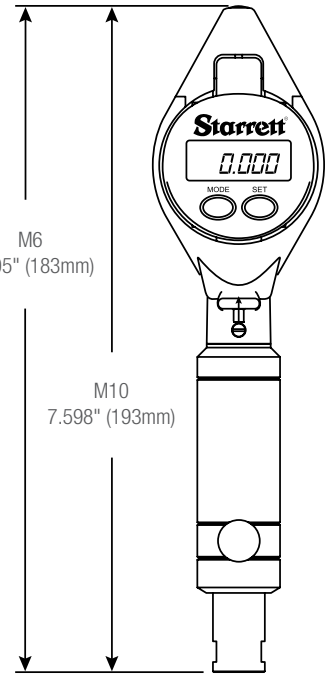

Mini indicator with shroud, long handle - M6 and M10

AccuPlug Dimension Specifications

Plug Diameter "A"		Range		B		C		D		
in	mm	in	mm	in	mm	in	mm	in	mm	E
0.2362-0.7874	6-20	.006	0.15	.138	3.5	1.063	27	1.378	35	M6 x 0.75
0.5906-1.7717	15-45	.008	0.20	.177	4.5	1.102	28	1.713	43.5	M10 x 1
1.7717- 2.756	45-70	.008	0.20	.217	5.5	1.102	28	1.732	44	M10 x 1
2.756-11.0236	70-280	.008	0.20	.217"	5.5	1.378	35	1.732	44	M10 x 1

PRECISION MAKES THE DIFFERENCE

YOU'VE HEARD OF THE MOTHER OF INVENTION

NOW MEET THE FATHER OF INNOVATION

The L.S. Starrett Company was founded by Laroy Sunderland Starrett in 1880 who had patented the first combination square in 1878. Since then, we've been following in his footsteps, creating the kind of precision tools, gages and instruments that have made the name "Starrett" synonymous with "innovation." Laroy Starrett set very high standards and we steadfastly maintain them today.

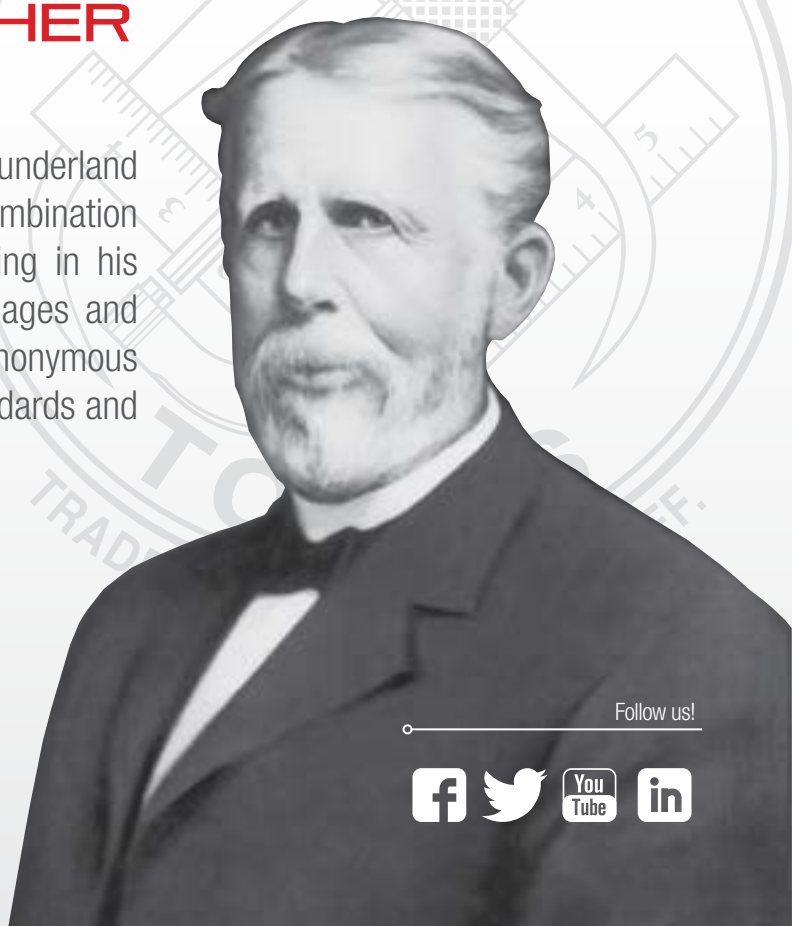

Starrett®

(978) 249-3551 • starrett.com

Follow us!

TOOL SETS

Basic Electronic Tool Sets

S766A

WITHOUT OUTPUT

Basic starter sets for electronic measuring include slide calipers and 1"/25mm micrometers. Two sets without output are offered: S766AZ for English units and S766MAZ for metric. Both sets include an attractive, protective case.

S766AZ/EDP 12206 - Inch Set (without output)	
Cat. No.	**Description**
EC799A-6/150	0-6" (0-150mm) electronic slide caliper
3732XFL-1	0-1" (0-25mm) electronic outside micrometer
S766MAZ/EDP 12207 - Millimeter Set (without output)	
Cat. No.	**Description**
EC799A-6/150	0-6" (0-150mm) Electronic Slide Caliper
3732MEXFL-25	0-1" (0-25mm) Electronic Outside Micrometer

S766AZ

S909Z

S909, S909M Basic Precision Measuring Tool Sets

Sets contain three of the most commonly used precision tools. Furnished in attractive, protective cases.

S909Z/EDP 65122 - Inch Set	
Cat. No.	**Description**
T436.1XRL-1	1" (25mm) Outside Micrometer with Carbide Faces
120A-6	6" (150mm) Dial Caliper
C604R-6	6" Spring Tempered Precision Rule
S909MZ/EDP 65668 - Millimeter Set	
Cat. No.	**Description**
V436.1MXRL-25	1" (25mm) Outside Micrometer with Carbide Faces
120M-150	6" (150mm) Dial Caliper
C635E-150	6" Spring Tempered Precision Rule

S898Z Automotive Inspection Sets

Starrett has developed two kits that combine highly flexible configuration with several options to secure a measuring fixture to whatever surface is available to do the job. These kits will prove themselves to be invaluable to auto mechanics, providing an answer to the question: "How am I going to do that?".

Features

- Allows very precise measurement for automotive repair
- Used to set proper distance or alignment
- Enables measuring fixture to be secured to any available surface
- Highly flexible configuration

S898Z Inspection Kits		
Cat. No.	**EDP**	**Description**
S898Z-1	12438	Inspection kit with indicator, pliers, Flex-O-Post and form-fit plastic case
S898Z-2	12437	Inspection kit with indicator, pliers, Flex-O-Post, magnetic base and form-fit plastic case

S898Z-1

DATA COLLECTION SYSTEMS

DataSure® WIRELESS DATA COLLECTION

100% DATA COLLECTION: ERROR-FREE AND FAST

The DataSure Wireless Data Collection System allows real-time, 100% error-free data collection. From simple installations to systems covering thousands of square feet, data can be collected and analyzed much faster than with manual inspection and data entry.

With manual inspection data collection, the repetitive hand movements required to pick up tools, measure parts, put tools down, and then record results is time consuming. Furthermore, hand writing or keying in data leads to mistakes that result in scrap, excess inventory, and even rejected parts.

With DataSure, just measure and send for fast and error-free data.

DataSure also eliminates problems associated with data cables including placement, installation, safety and high cost. DataSure makes it easy to bring a precision measuring tool to the work, rather bringing the work to the tool.

DataSure is a full shop wireless solution. It works not only with Starrett tools, but also Mitutoyo, Sylvac, CDI Tools, Mahr, Tesa and other brands.

DataSure® Technical Overview

- Transmission users receive confirmation at the tool
- End Node radios store up to 10 readings in the event that the main system is down or busy
- Base system handles up to 100 tools, with 25 to 40 tools in a typical installation
- Each radio's range is approximately 65 feet (20 meters). Adding Routers can increase range in 100 foot increments.
- The DataSure system features a license-free 916MHz ISM band radio and a self-configuring and self-healing network
- Data acquisition from tools can be initiated by operator or host control
- Network, tool and end node battery status are all automatically monitored and recorded on screen and stored in the system's database
- The multi-mode software feature allows one tool to be connected to a Gateway for simple installations, or up to 20 multiplexers and 100 tools for complex shop environments
- Rechargeable routers are ideal for mobile applications and large-component data collection environments such as aircraft assembly hangars, large casting foundries, and auto body stamping facilities
- Easy-to-use included software offers user configurable names for tools and groups
- DataSure's flexibility means it can output data directly to the main application screen, your SPC software, a local or networked database, and CSV file format
- IP67 rating on end nodes
- Remote client access from another PC on your LAN

Contact Starrett for the DataSure Cost Calculator, application profiles, white papers, FAQ's and more at +1 (978) 249-3551.

DataSure Hardware

DataSure starts with superior engineering, state-of-the-art technology and rugged durability. End Nodes, Routers and Gateways are built to perform reliably in almost any environment. Sturdy construction and heavy duty materials help them withstand the rigors of everyday use under demanding conditions.

DataSure® WIRELESS DATA COLLECTION

A DataSure® Shop-floor

The illustration (below) demonstrates how a large, multi-workstation shop might be networked with DataSure.

Tools at various locations collect data. The End Nodes send data to the nearest Router, and then to the Gateway, or directly to the Gateway if that is the best path. The Gateway sends a signal back through the same path to the End Node to confirm receipt of the data.

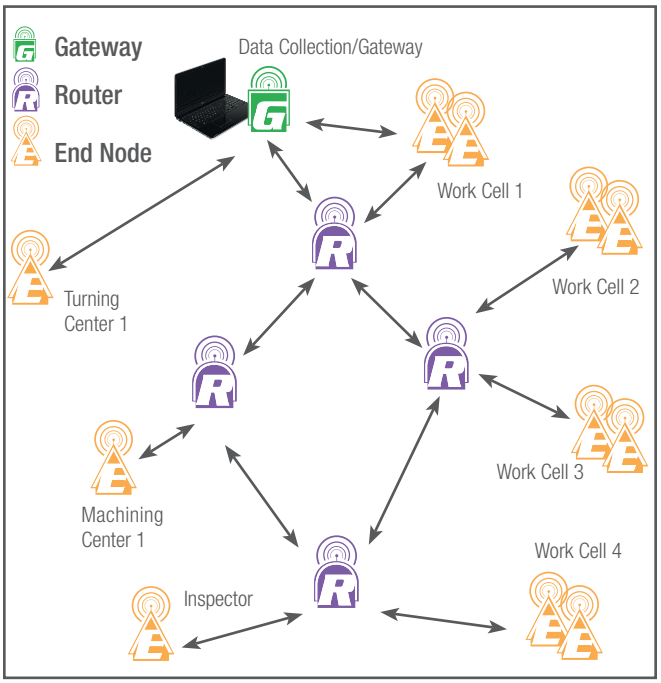

End Node

The DataSure End Node plugs directly into digital tools. It sends measurement data and verifies receipt at the Gateway with a green light. The smaller 2nd Generation End Node has IP67 dust and water protection.

IP67

End Node Features

- User feedback LEDs
- On-tool data storage
- Adapts to most tools

Power	Range ft.	m	Size in	mm
CR2450 lithium	65	20	2.2 x 2.0 x 0.49	55.3 x 43.2 x 17.8

Software

DataSure Advanced Wireless Data Collection Software connects and manages your tools, network, data and third party SPC applications.

Gateway

The DataSure Gateway is the central point for data collection and tool management and plugs directly into a PC through a USB port.

Gateway Features

- USB
- Sends data to application or database
- Multi-file export features
- Unique system ID

Power	Range ft.	m	Size in	mm
USB	100	30	7.0 x 5.5 x 2.5	178 x 140 x 63.5

Router

Each DataSure Router extends the system's range in increments of 100 feet (30 meters). They ensure system robustness by providing alternate signal paths in noisy environments.

Router Features

- Range extender
- Transmits around interference
- Wall mount or mobile

Power	Range ft.	m	Size in	mm
AC, NiMH	100	30	7.0 x 5.5 x 2.5	178 x 140 x 63.5

DataSure® WIRELESS DATA COLLECTION

DataSure® Software

DataSure Advanced Wireless Data Collection Software connects and manages your tools, network, data and third party SPC applications.

- Monitors your wireless network, tools, system status, end node battery voltages and tools measurements all from one screen
- Measurements can be initiated and viewed directly from the home page
- Data can be exported in CSV format
- Data is stored on a local or network database with programmable, scheduled backup
- Remote personnel can configure tools, export data and monitor activity via intranet with no additional software
- Virtual multiplexers allow data to be directed from specific tools to multiple software applications
- Each radio end node can be personalized with a descriptive name
- Drag and Drop tools on multiplexers
- Fast and easy label changes for tools
- Fast response for measurement
- System OS Requirements: Windows® 2000, XP Home and Pro with SP2, SP3, Vista SP1, Vista SP2, Windows® 7 32 bit, Windows® 7 64 bit, Windows® 8, Windows® 10
- Data can also connect directly to your SPC application via com port or DDE (Dynamic Data Exchange) link

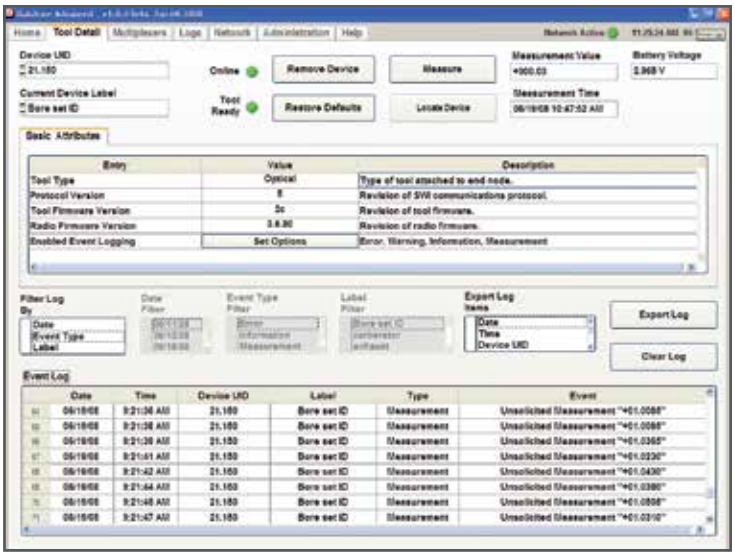

DataSure Advanced Wireless Data Collection Manager Software provides a powerful, intuitive interface and works well with many popular SPC applications.

DataSure® WIRELESS DATA COLLECTION

Adding DataSure® to Your Facility

To add DataSure to your facility, simply contact us. We will work with you to specify a system for your application.

We will add new End Nodes and Output Connectors to those listed below as needed. Please call to discuss your requirements.

Note that new End Nodes or Routers for a current system must be made to match the Group Number of your existing components.

A wide variety of End Nodes are available, allowing DataSure to interface with electronic measuring tools from virtually all major manufacturers

DataSure Gateway, Routers

Cat. No.	EDP	Description
1500-1-N	12051	Gateway, USB, 917MHz
1500-2-N	12059	Router, 916MHz, 120/240 VAC
PT62742	62024	Gateway or Router Mounting Bracket

DataSure End Nodes, Connectors and Accessories

Cat. No.	EDP	Tool Type	Description
1500-3A-2N	12531	Micrometer	End Node, Starrett 795 Series
1500-3A-3N	12532	Micrometer	End Node, Starrett 3rd Gen., 733 Style Micrometer Head
1500-3A-9N	12538	Micrometer	End Node, Mitutoyo 500-6XX, 500-7XX Series
1500-3A-10N	12539	Micrometer	End Node, Mitutoyo 293-2XX, 293-3XX Series
1500-3A-24N	72536	Micrometer	End Node, Starrett 795.1 Series
1500-3A-18N	12565	Micrometer/Slide Caliper	End Node, Starrett Proximity 770B Micrometers, 798 Calipers, and 781 3-Button
1500-3A-1N	12530	Slide Caliper	End Node, Starrett Opto, 797 Series, 781 2-Button
1500-3A-23N	72662	Slide Caliper	End Node, Starrett EC799 Slide Caliper
1500-3A-7N	12536	Slide Caliper/Indicator	End Node, Mitutoyo with and without Absolute Encoder
1500-3A-4N	12533	Indicator	End Node, Starrett 2700 Series
1500-3A-21N	00046	Indicator	End Node, Starrett 2900 Series
1500-3A-13N	12542	Indicator	End Node, Mitutoyo 543-5XX Series
1500-3A-5N	12534	Other	End Node, Starrett Cat. No. 2000 Series
1500-3A-15N	12544	Other	End Node, Starrett 782, 781, 797 Series, TESA-CAL, TESA Intrimik
1500-3A-6N	12535	Other	End Node, Mitutoyo 6-Pin Round
1500-3A-8N	12537	Other	End Node, RS232, DB9 Tools with TX, RX, GND
1500-3A-11N	12540	Other	End Node, Marposs E4N
1500-3A-12N	12541	Other	End Node, Universal 10-pin connector
1500-3A-14N	12543	Other	End Node, Mahr-Federal with µMaxum and XL
1500-3A-16N	12545	Other	End Node, Mahr-Federal EX
1500-3A-20N	69854	Other	End Node, TESA Microhite
PT62785-0	12188	Accessory	Mushroom Head Fastener Kit to Attach End Nodes to Tool (Two pair included with each end node)

DataSure Replacement Output Connectors

Cat. No.	EDP	Tool Type	Description
PT63298-2N	12547	Micrometer	Replacement Output Connector, Starrett 795 Series
PT63706-22N	73325	Micrometer	Replacement Output Connector, Starrett 780 Bore Gage
PT63473-24N	73327	Micrometer	Replacement Output Connector, Starrett 795.1 Series
PT63305-9N	12554	Micrometer	Replacement Output Connector, Mitutoyo 500-6XX, 500-7XX Series
PT63306-10N	12555	Micrometer	Replacement Output Connector, Mitutoyo 293-2XX, 293-3XX Series
PT63300-4N	12549	Indicator	Replacement Output Connector, Starrett 2700 Ind.
PT63536-21N	73324	Indicator	Replacement Output Connector, Starrett 2900
PT63389-18N	12562	Slide Caliper	Replacement Output Connector, Starrett 798 Calipers, Proximity 781 3-Button
PT63660-23N	12547	Slide Caliper	Replacement Output Connector, Starrett EC799 Caliper
PT63297-1N	12546	Other	Replacement Output Connector, Starrett Opto, 797 Series, 781 2-Button
PT63299-3N	12548	Other	Replacement Output Connector, Starrett 3rd Gen., 733 Style Micrometer Head
PT63301-5N	12550	Other	Replacement Output Connector, Starrett 2000/2001/3752 Series
PT63302-6N	12551	Other	Replacement Output Connector, Mitutoyo 6-Pin Round
PT63303-7N	12552	Other	Replacement Output Connector, Mitutoyo without Absolute and with Absolute
PT63310-14N	12559	Other	Replacement Output Connector, Mahr Federal Umaxum Indicator
PT63312-16N	12561	Other	Replacement Output Connector, Mahr Federal Ex
PT63304-8N	12553	Other	Replacement Output Connector, RS232, DB9 Tools with TX, RX, GND
PT63307-11N	12556	Other	Replacement Output Connector, Digimatic W/D-Sub 9 Pin
PT63308-12N	12557	Other	Replacement Output Connector, Universal Mitutoyo 10 Pin
PT63309-13N	12558	Other	Replacement Output Connector, Absolute Digimatic
PT63311-15N	12560	Other	Replacement Output Connector, Opto/Duplex
PT63533-20N	73320	Other	Replacement Output Connector, TESA Microhite

DataSure® WIRELESS DATA COLLECTION

A DataSure® Throughput and Accuracy Study

In a controlled, 100% inspection test to measure the impact of DataSure on throughput and quality assurance, we made three measurements per part and recorded the data on 500 parts.

Methods 1 and 2 involve time-consuming hand movements to pickup and put down the tool in order to record data. Measurement with DataSure is fast and direct. The slowest method (#1) required 29 second per part with many errors. With DataSure® the same task was nearly 5 times faster – with no errors.

Method 1: Measure, Handwrite Results, Remote Data Entry

- 37 time/motion elements, 28.9 sec./part
- 62 entry errors

Factors affecting accuracy and throughput:

- Measurement must stop to handwrite results.
- Illegible handwritten numbers, mistakes noted but not corrected, data written in shorthand and inspector's handwriting misread by the transcriber
- Value can change when the inspector releases the micrometer
- Data entry errors at the PC

Method 2: Measure and Enter Results to PC

- 20 time/motion elements: 15.3 sec./part
- 4 data entry errors

Factors affecting accuracy and throughput:

- Alternating measuring and data entry caused errors
- Caliper not seated correctly when released to key-in data
- Missed data entry, incorrect keystrokes, entry to wrong cell

Method 3: Measure and Enter Results Directly with DataSure

- 17 time/motion elements: 6.6 sec./part
- 0 entry errors

Factors affecting accuracy and throughput:

- Measurement technique is maintained
- No interpretation or memory errors
- Immediate, direct data entry eliminates errors

Gage Multiplexers

7612 and 7613 4-Port GageMux USB

FAST, SIMPLE AND FLEXIBLE

Starrett 4-port gage multiplexers make it fast and easy to connect multiple gages to a PC. Interface is through USB and USB keyboard outputs, as well RS232 ports.

With the 7612 GageMux, no software wedge or other intermediary software is required. The PC "sees" the connection from the 7612 as a keyboard. Simply, open any document on your computer that accepts input, position your cursor, then send the data from the tool. That data will be input at the cursor location.

The 7613 GageMux USB 4-port gage is similar to the 7612 except that it does not have the keyboard function. It requires the Starrett 719 Software Wedge or a similar product to input data into the PC.

From manufacturing methods and materials to a built-in, power-saving mode, the GageMux was designed to be an environmentally friendly product.

Features and Specifications

- 4 input ports
- Simple set-up, your PC automatically installs USB driver when GageMux is plugged into PC's USB port – does not require software configuration
- Supports USB 2.0, RS232 and keyboard output
- Operating modes: Static (Normal) mode operation or Dynamic (MIN/MAX/TIR)
- Footswitch input, LED status light on each input, host command operation and set up

7612 and 7613 GageMux, Cables and Accessories		
Cat. No.	**EDP**	**Description**
7612	69886	GageMux 4 port, USB, RS232 and keyboard output; Includes USB cable and 110V AC power supply
7613	69885	GageMux 4 port, USB and RS232 includes USB cable and 110V AC power supply
7612 and 7613 GageMux Cables		
Cat. No.	**EDP**	**Description**
795SCM	69892	Connect 795 Micrometer
795.1SCM	01124	Connect 795.1 and 733.1 Micrometer
733SCM	69893	Connect 733 Micrometer and 2600 Indicator
798SCM	69894	Connect 798 Caliper
797SCM	69895	Connect 797 Caliper
EC799BSCM	46000	Connect EC799B Caliper
2000SCM	69907	Connect 2000 Height Gage
2700SCM	69896	Connect 2700 Indicators
2900SCM	68751	Connect 2900 Indicators
7612 and 7613 GageMux Accessories		
Cat. No.	**EDP**	**Description**
7612FTS	69905	Industrial Foot Switch with 6' cable
7612PS	69899	220/50 External Power Supply
719	66490	Software Wedge allows direct input to PC (7613 only)

719 Software Wedge™

Data collection software for serial devices. WinWedge captures data directly to Excel, Access or any Windows application or web page. It can even send commands out a COM port so you can control your device through hot keys, buttons, or DDE. Can also be used with any SCU style cable.

719 Software Wedge

7612

SmartCables™

SmartCables

EASY TOOL-TO-PC CONNECTION AND DATA TRANSFER

SmartCable makes it fast and easy to connect a measuring tool to a PC. The interface provides the ability to connect through USB and USB keyboard outputs.

With the SmartCable keyboard output, no software wedge or other intermediary software is required. The PC "sees" the connection from the SmartCable as a keyboard. Simply, open any document on your computer that accepts input, position your cursor, then send the data from the tool. That data will be input at the cursor location.

With SmartCable USB output, requires 719 Software Wedge or a similar product to input the data to the PC.

From manufacturing methods and materials to a built-in, power-saving mode, the SmartCable was designed to be an environmentally friendly product.

Features and Specifications

- Simple Set-up, your PC automatically installs USB driver when the SmartCable is plugged into PC's USB port
- Supports USB 2.0, RS232 and Keyboard (optional) output
- Simple plug and play set up – doesn't require software configuration
- Operating modes: Static (Normal) mode operation or Dynamic (MIN/MAX/TIR)
- LED status light

Smart Cable Products

Cat. No.	EDP	Description
733SCU	69898	SmartCable USB Ouput for 733 Micrometer and 2600 indicator type output
733SCKB	69888	USB cable to PC (In focused window)
795SCU	69897	SmartCable USB Ouput for 795 Micrometer
795SCKB	69887	USB cable to PC (In focused window)
795.1SCU	01126	SmartCable USB Output for 795.1 and 733.1 Micrometer
795.1SCKB	01125	USB cable to PC (In focused window)
797SCKB	69890	USB cable to PC (In focused window)
798SCKB	69889	USB cable to PC (In focused window)
EC799BSCU	46002	SmartCable to USB
EC799BSCKB	46001	USB cable to PC (In focused window)
2000SCKB	69908	USB cable to PC (In focused window)
2700SCKB	69891	USB cable to PC (In focused window)
2900SCU	68712	SmartCable USB Output for 2900
2900SCKB	68839	USB cable to PC (In focused window)
719	66490	Software Wedge allows direct input to PC
PT26441	65893	2700 USB Connection

719 Software Wedge™

Data collection software for serial devices. WinWedge captures data directly to Excel, Access or any Windows application or web page. Send commands out a COM port so you can control your device through hot keys, buttons, or DDE. Works with all cables and DataSure.

719 Software Wedge

Direct RS232 9-Pin Connection Cables

Part No.	EDP	For Use with Starrett Tool Numbers
PT61963	66636	714, 760, 786, 733, 762, 788, 749, 764, 790, 751, 769, 2600-1, 753, 773, 2600-4, 756, 777, 2600-8, 3752
PT62425	67658	2000, 2001
PT62606	68822	797B, 5000, 5001, 5002, 5003, 5004, 5005, 5006, 781; Opto Connection
PT63329	12732	798, USB Connection, 770B, 781B; Proximity Connection

798SCKB

RS232 9-Pin Connection Cable

GAGE AMPLIFIERS, HARDNESS TESTERS, SURFACE TESTERS

Gage Amplifiers

717 Electronic Gage Amplifier

Starrett has made electronic gaging easier with the 717 Electronic Gage Amplifier. The large analog display is easy to read and shows real-time change in measurements.

The 717 Gage Amplifier is flexible and has an accuracy within ±2% of full scale. Ranges vary from ±.010" to ±.0001" (±0.200mm to ±0.002mm), with gage graduations from .0005" to .000005" (0.01mm to 0.0001 mm).

717	67001	Amplifier with Power Supply Charger
715-1Z	64479	Lever-Type Gaging Head Range ±.010" (0.25mm)
715-2Z	64480	Cartridge-Type Gaging Head Length 2-1/2" (64mm) Range ±.020" (0.50mm)
715-6	64186	Cartridge-Type Gaging Head Pneumatic-Push, Length 2-3/4" (70mm) Range ±.040" (0.100mm)
715-7	64187	Cartridge-Type Gaging Head Length 1-3/8" (35mm) Range ±.020" (0.50mm)
715-8	64188	Cartridge-Type Gaging Head Length 2-1/2" (64mm) Range ±.040" (0.100mm)
715-9	64189	Cartridge-Type Gaging Head Length 3-5/8" (92mm) Range ±.080" (0.200mm)
PT99441	52991	Height Gage and Comparator Attachment 1/4 x 1/2" (6.3 x 13.5mm) (Adapts Gaging Heads to Height Gages, Magnetic Base Indicator Holders, Dial Comparators and Test Indicator Stands.) .375" (9.5mm) Snug Hole
PT60636	63839	Power Supply Charger for USA and Canadian Configuration – 115/120 Volts/60 Cycle
PT99353	66456	Power Supply Charger for United Kingdom Configuration – 100-240 VAC, 47-63Hz
PT99340	66455	Power Supply Charger for European Configuration – 100-240 VAC, 47-63Hz
PT60642	72499	Cable to Computer (9-Pin to 9-Pin)
728-3	66662	Shop Floor Pro™ Software
719	66490	Software Wedge™ Program for Interfacing to Spreadsheets

Ranges/Graduations

Range in	Each Gage Graduation
±.010	.0005
±.002	.0001
±.001	.00005
±.0002	.00001
±.0001	.000005
mm	
±0.200	0.01
±0.100	0.005
±0.020	0.001
±0.010	0.0005
±0.002	0.0001

Features

- Dual inputs for cumulative/differential measurements
- Selectable inch or millimeter ranges
- Selectable digital or analog output
- Simple "push-button" calibration
- Mirrored gage display for parallax-free readability
- Rugged metal case can be used anywhere in the shop
- Uses standard Starrett lever and cartridge-type probes
- Remote zero using PC
- Front panel data send button
- Single and continuous data send modes
- Serial Data Output via front panel button, PC or optional foot switch

Accuracy

- Within ±2% of full scale

Power Requirements

- 110 volt VAC/60Hz (AC adapter furnished)

Data Output

- Digital: ASCII serial data
- Analog: ±2.5 VDC/Full scale

Size

- Dimensions: 9-1/4" Height x 5-1/2" Width x 5-1/2" Depth (235 x 140 x 140mm)
- Weight: 6 lb (2.7kg)

717 Electronic Gage Amplifier with 252 Transfer Gage and 715-1Z Gaging Head

Gage Amplifiers

RMS Remote Display

The Remote Display allows for the connection of up to four gages and displaying their current measurements into an Android application. In addition, the Remote Display can connect to up to two external data consumers (desktop computer, laptop, PLC, or any generic serial device) over RS-232 and USB.

The Remote Display has been designed to work with nearly any gauge that outputs data in Digimatic format. This includes all 2700 Indicators. In addition, devices that output raw quadrature can be used as well.

As a standalone measurement system, the Remote Display provides a very intuitive and user-friendly way to configure and monitor several gages at once. Connecting the Remote Display to a computer or other serial device makes data collection and statistical process control (SPC) simple and easy.

Features

- 7" Android tablet with intuitive software application for easy process monitoring, setup, and data export
- Flexible data requesting and logging (.CSV to Micro SD Card, E-mail, PC transfer) with programmable auto logging and collection
- Simultaneous connection of up to four devices (Indicators, Calipers, Micrometers, Probes, etc.)
- Supports both Digimatic and Quadrature gaging systems
- "Send All" or "Request All" data to/from all gages
- TIR, Max., Min. and Freeze Hold, Travel Reverse
- USB Type A and B, RS232 connection
- High quality, low profile enclosure
- Bright LED power indication
- IN, MM and No Units setting
- Programmable Ratios
- Four channel view

Electronic Measurement System

Cat No.	EDP	Description
RMS2704	72954	RMS4 readout/data collection system with tablet, software MUX box

Probes

		Description/Range		Resolution		
Cat No.	EDP	in	mm	in	mm	AGD Size
P27300-1	72955	.060	1.5	.0001	.002	2
P27300-0	72956	.060	1.5	.00005	.001	2
P27400-1	72957	.150	3.8	.0001	.002	2
P27400-0	72958	.150	3.8	.00005	.001	2
P27500-1	72959	.250	6.35	.0001	.002	2
P27500-0	72960	.250	6.35	.00005	.001	2
P27600-1	72961	.600	15	.0001	.002	2
P27600-0	72962	.600	15	.00005	.001	2
P27211-1	72963	1.0	25.4	.0001	.002	3
P27211-0	72964	1.0	25.4	.00005	.001	3
P27720-1	72965	2.0	50	.0001	.002	RECT
P27820-1	72966	4.0	101.6	.0001	.002	RECT

Accessories

Part No.	EDP	Description
PT05937	72967	Push button remote global data send cable for MUX Box with 2.5mm plug
PT05679	68752	6' Extension Cable

Complementary Electronic Equipment

Cat No.	EDP	Description
EC799BSCM	46000	SmartCable Gage MUX - EC799B Slide Caliper
798SCM	69894	SmartCable Gage MUX - 798 Slide Caliper
795.1SCM	01124	SmartCable Gage MUX - 795.1 Micrometer
733SCM	69893	SmartCable Gage MUX - 733 Micrometer
2900SCM	68751	SmartCable Gage MUX - 2900 Indicator
2700SCM	69896	SmartCable Gage MUX - 2700 Indicator
2000SCM	69907	SmartCable Gage MUX - 2000-24 Height Gage

Backs/Lever*

Part No.	EDP	Description
PT26406	65886	Flat Back
PT26407	65887	Offset Lug Back
PT26411	65891	Adjustable Lug Back
PT26408	65888	Adjustable Back
PT26409	65889	Post-Type Back
PT26410	65890	Screw Bracket Back
PT26848	66293	Adjustable Mounting Bracket Back
PT26405	65885	Lifting Lever

*Other backs, styles and accessories also available by request. To order contact points individually, see previous pages.

RMS2704

Gage Amplifiers

776 Gage-Chek™ Multi-Axis Measured Value Display

The Gage-Chek™ 776 is a multi-axis measured value display that accepts up to eight probe inputs. It features intuitive visual display, helpful audio cues and user-defined formulas. GAGE-CHEK also reports dynamic Min/Max measurements, provides SPC analysis from an integrated database, and includes connectivity to PCs and other Starrett tools.

Specifications 776 Gage-Chek Multi-Axis Measured Value Display	
LCD	6" color
Display Digit Size	.45"
Resolution Down To	.000004"/.0001mm
Operating Temperature	32º - 115 °F
Enclosure (W x H x D)	11.5 x 7.5 x 2.75"
Base Width (W x H x D)	10 x 2 x 7.5"
Enclosure Weight	3.5 lbs
Base Weight	7 lbs
Input Voltage Range	85 VAC - 264 VAC
Input Frequency	43 Hz - 63 Hz
Inputs	1-, 4- and 8-axis input available
External Connections	Foot Switch, Remote Keypad, Touch Probe, RS232C Serial Port, Parallel Port
Outputs	2 Relay Outputs

Features

- Large (6") color flat-panel LCD screen built into a compact ergonomically designed case with an adjustable tilt base allows comfortable positioning for the operator
- Supports 1, 4 or 8 input channels. These can be mathematically combined to display dimensions such as flatness, volume or runout.
- Screens include individual readings with the capacity to display four lines simultaneously (each line 9/16" high), bar and dial position style displays, graphs and histograms of measurement statistics, and tables of measurement and SPC data
- Supports Starrett 776 LVDT probes and Heidenhain Specto style 12mm and 30mm range digital probes
- Measurements can be taken by the operator or in a semi-automated manner
- Large comfortable buttons allow easy selection of measurement functions, display screen changes, data entry and zeroing the screen
- Speaker and external jack outputs can be adjusted to compensate for noisy work environments. Earphones can be plugged into speaker jack for silent operation.
- Two 3 x 1/2" keys placed over the screen can be programmed as hot keys for frequently used functions
- Optional foot switch available

776

The 776 accepts multiple gage inputs simultaneously – invaluable for applications such as this Starrett special gage fixture

Gage Amplifiers

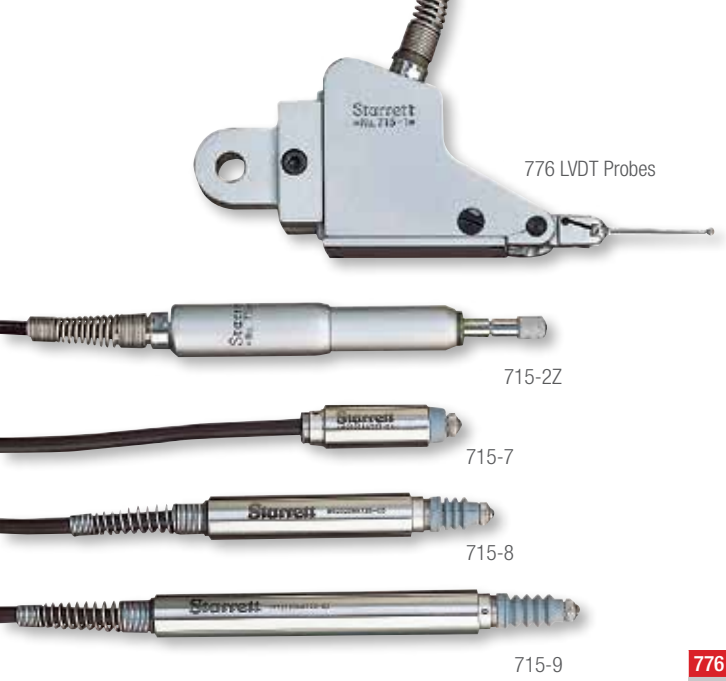

776 LVDT Probes

715-2Z

715-7

715-8

715-9

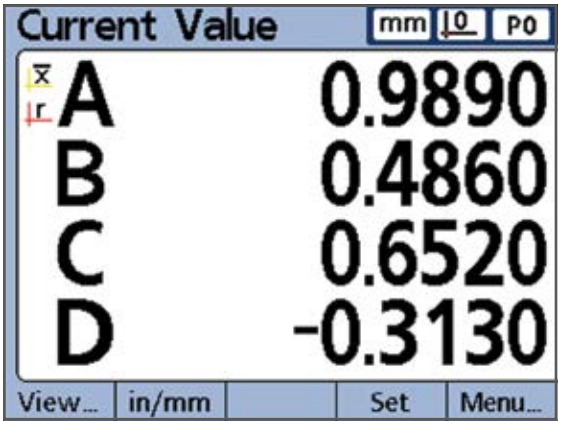

DRO View: Gage-Chek™ 776 features large, easy-to-read numerical display with custom dimension labels. Out of tolerance conditions are quickly identified by a change to red. Icons indicate that a process study has been performed, complete with in/out of tolerance alert. Mode switches include inch/metric, absolute/incremental, decimal degree/degrees, minutes, seconds.

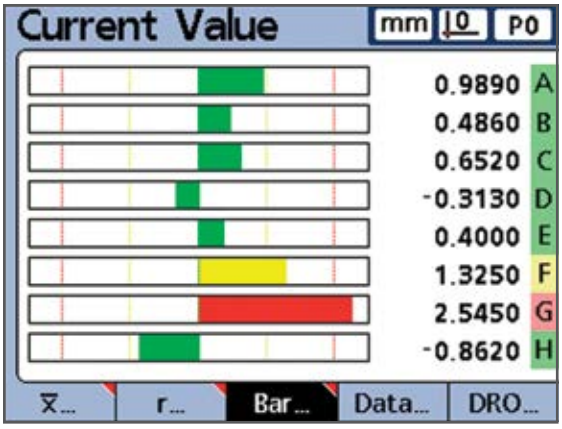

Displays all gages plugged into the gage chek at one time. It automatically displays marginal and error indications with multi-color display.

776 Gage-Chek Multi-Axis Measured Value Display

Cat. No.	EDP	Description
776A	68635	Gage-Chek – 140-SP with 4 Inputs, Specto
776B	68636	Gage-Chek – 180-SP with 8 Inputs, Specto
776C	68761	Gage-Chek – 110-ST with 1 Input, LVDT
776D	68762	Gage-Chek – 140-ST with 4 Inputs, LVDT
776E	68763	Gage-Chek – 180-ST with 8 Inputs, LVDT
719	66490	Software Wedge RS232 for Windows
PT99530	68637	Two-Function Foot Switch
PT62514	68638	Eight-Function Remote Keypad
PT62515	68639	Gage-Chek Instruction Manual
776-12	68640	.472" (12mm) Length Probe, Specto
776-12R	68796	.472" (12mm) Length Probe Radial Exit, Specto
776-30	68641	1.180" (30mm) Length Probe, Specto
776-30R	68797	1.180" (30mm) Length Probe Radial Exit, Specto
PT05713	68172	9.849" (3 meter) Extension Cable for Specto Probe
PT05727	68773	32.89" (10 meter) Extension Cable for Specto Probe
776-1Z	68817	±.010" (0.25mm) Lever Type Probe, LVDT
776-2Z	68818	±.020" (0.50mm) Traditional Probe, LVDT
776-7	68819	±.020" (0.50mm) Short Probe, LVDT
776-8	68820	±.040" (0.100mm) Probe, LVDT
776-9	68821	±.100" (2.54mm) Probe, LVDT
PT05414	68828	6' (1.82 meter) Extension Cable for LVDT
PT05415	68829	13' (4.5 meter) Extension Cable for LVDT

Heidenhain Specto Length Probes

Gage Amplifiers

715 Electronic Gage Amplifier Gage Heads

715-1Z

715-1Z Lever-Type Head

- Mounts directly in place of dial indicators with dovetail or AGD lug-type backs
- .078" (2mm) diameter contact standard .031" (0.8mm) and .062" (1.6mm)
- Diameter carbide contacts are available

715-2Z* Cartridge-Type Heads

- Hardened steel contact with radius tip. Head will accept all standard AGD contact points.
- .375" (9.5mm) mounting diameter allows replacement of standard AGD dial indicators

715-6, 715-7, 715-8, and 715-9 Cartridge-Type Heads

- Tungsten carbide ball contacts
- Head will accept any AGD style contact**
- Half-bridge construction, stainless steel body
- .375" (9.5mm) mounting diameter allows replacement of standard AGD dial indicators

715 Electronic Gage Amplifier Gage Heads

Cat. No.	EDP	Spindle Range	Length	Contact Pressure
715-1Z	64479	±.010" (0.25mm) measuring range		8-12 grams
715-2Z*	64480	±.020" (0.50mm)	2-1/2" (64mm)	25-35 grams
715-6	64186	±.040" (1.02mm)	2-3/4" (70mm)	70 grams
715-7	64187	±.020" (0.51mm)	1-3/8" (35mm)	
715-8	64188	±.040" (1.02mm)	2 -/2" (64mm)	
715-9	64189	±.080" (2.03mm)	3-5/8" (92mm)	

715-1Z, -2Z, -6, -7, -8, -9 Gaging Heads come with a 6' (1.8m) cable and male connector.
* Longer range cartridge-type gaging heads are available, quoted on application.
** 715-9 head will accept all standard AGD contacts.

715-2Z

715-6

715-7

715-8

715-9

Bench Hardness Testers

3814 Analog Bench Hardness Tester

The 3814 Hardness Tester provides reliable Rockwell Hardness values on all types of metal and alloys, hard or soft, and in many shapes. This reliable bench hardness tester has a high quality casting, is ergonomically designed for easy operation and is engineered to ensure accurate results. It is an ideal basic hardness solution, economically priced to suit a variety of lab, workshop, toolroom and inspection department applications. The 3814 conforms to ASTM E-18 standard. The tester is furnished with a diamond indentor, a 1/16" (1.6mm) ball indentor, three certified test blocks, four test tables – 5.87" (149mm) and 2.5" (63.5mm) flat anvils, 5/8"(15.9mm) spot anvil and a standard vee anvil – and an accessory case.

Features

- Ability to handle Rockwell Scales A through H and K
- Stable cast iron construction
- Ideal basic hardness testing for many typical applications
- Digital readout available

3814 Hardness Testers		
Cat. No.	**EDP**	**Description**
3814	67754	Analog hardness tester
3814E	72974	Digital readout replacement
PT06145	72519	Hardness tester stand

Specifications	
Minor Load	10Kgf
Major Load	A: 60Kgf, B: 100Kgf, C: 150Kgf
Test Force Application	(Dead weight applies test force)
Test Force Control	Hydraulic Dashpot System
Results Display	Analog – Dial Gage
Throat Depth	6.6" (168mm)
Maximum Test Height	6.69" (169.9mm) *
Unit Height/Width/Depth	30 x 8.5 x 20" (762 x 216 x 508mm)
Unit Weight	261lb (118kg)

* Requires bench alteration.

3814

3814E

Bench Hardness Testers

3815 Twin Analog Bench Hardness Tester

MEASURES ROCKWELL & SUPERFICIAL ROCKWELL HARDNESS

The 3815 Twin Analog Hardness Tester features state-of-the-art design and rugged construction. It is engineered to provide highly sensitive, accurate readings and excellent repeatability in all Rockwell and Superficial Rockwell hardness scales.

The 3815 is ideal for heat treatment facilities, tool rooms, workshops, laboratories and inspection labs.

3815 Twin Analog Bench Hardness Tester		
Cat. No.	**EDP**	**Description**
3815	12800	3815 Bench Hardness Tester, diamond conical and 1/16" ball indentors, HRC, HRB, HR15N, HR30N and HR45T test blocks, 5.87" (150mm) test table, 2.5" flat anvil, standard vee anvil, accessory case and dust cover
PT06145	72519	Hardness Tester Stand

A broad range of test blocks and other hardness tester accessories are available.

Specifications	
Minor Load	10 Kgf
Minor Load – Superficial	3 Kgf
Major Load	60/100/150 Kgf
Major Load – Superficial	15/30/45 Kgf
Test Force Application	Dead Weight
Test Force Control	Manual
Results Display	Dual Scale Dial
Vertical Capacity	6.0" (15.2mm)
Throat Depth	5.5" (14mm)
Height	26.0" (66mm)
Width	18.2" (46.2mm)
Depth	9.4" (23.9mm)
Weight	250 lbs (113kg)

Features

- Direct analog dial reading
- Advanced design provides Rockwell and Rockwell Superficial testing
- Easy to operate
- Engineered to provide highly sensitive and accurate readings
- Conforms to ASTM E-18
- Tests Rockwell Scales: A, B, C, D, E, F, G, H, K, L, M
- Tests Superficial Rockwell Scales: HR15N, HR15T, HR30N, HR30T, HR45N, HR45Ts
- Includes a diamond conical indentor, 1/16" ball indentor, HRC, HRB, HR15N, HR30N and HR45T test blocks, 5.87" (150mm) test table, 2.5" (63mm) flat anvil, standard vee anvil, accessory case and dust cover

3815

Bench Hardness Testers

3816B Digital Motorized Bench Hardness Tester

The 3816B Bench Hardness Tester offers easy, fully automated testing procedures and provides highly sensitive and accurate readings. The 3816B measures the full regular Rockwell Scales according to ASTM and SAE guidelines and accommodates all types of hard or soft metals and alloys, in numerous configurations. The tester is furnished with a diamond indentor, a 1/16" (1.6mm) ball indentor, three certified test blocks, four test tables – 5.87" (149mm) and 2.5" (63.5mm) flat anvils, 5/8"(15.9mm) spot anvil and a standard vee anvil and an accessory case.

Features

- Fully automated routines reduce operator involvement and speeds measurements
- Large touch screen display
- Programmable scale conversions, dwell times and sample counter
- Sample averaging is automatically calculated
- RS232C output
- Built in mini-printer for outputting readings
- USB output

3816 Hardness Testers		
Cat. No.	**EDP**	**Description**
3816B	72972	Digital bench hardness tester
PT06145	72519	Benchtop level stand for tester
Accessories* for 3816 Digital Bench Hardness Tester		
Cat. No.	**EDP**	**Description**
PT05245	67944	C Regular
PT05249	67948	1/16" (1.6mm) Ball Unit
PT05069	67897	RA Test Block (Rockwell A Scale 80)
PT05059	67888	RB Test Block (Rockwell B Scale 90)
PT05050	67879	RC Test Block (Rockwell C Scale 63)
PT05272	67969	Master Block Set, Rockwell C Scale

* For additional listings of test blocks and accessories, refer to the following pages in this section.

Specifications	
Minor Load	10Kgf
Major Load	A: 60Kgf, B: 100Kgf, C: 150Kgf
Test Force Application	(Dead weight applies test force)
Test Force Control	Motorized
Results Display	Hi-def LCD digital readout
Throat Depth	6.50" (165mm)
Maximum Test Height	6.87" (175mm) **
Unit Height/Width/Depth	28 x 8.9 x 20.6" (711 x 226 x 523mm)
Unit Weight	187 lb (85kg)

** Requires bench alteration.

3816B

Hardness Testing

Test Blocks and Accessories for Hardness Testers

Starrett blocks can be used to test Rockwell, Brinell or Vickers scales. They are available in steel, brass and aluminum. Each block is serialized, with a certificate detailing the environmental conditions used to test the block.

Actual readings are given, with the averages of these readings: min. reading, max reading and a repeatability figure. The blocks are calibrated according to ASTM E-18 standards, ANSI (NCSL) Z540-1, (ISO) 10012-1, ISO/IEC 17025 and Mil-std 45662A.

Starrett hardness test blocks are manufactured from square steel or brass plates, as opposed to the more common round bar stock. The use of the plate gives a more accurate and consistent surface for inspection. Metallurgical tests have proven that during the production of round bar stock, suspended carbides in the mix migrate to the center of the rod. The scientific name for this condition is carbide segregation and results in different readings being found in the center of a rod rather than at its outer edges. Some manufacturers remedy this situation by removing the centers from their blocks.

Hardness test blocks are designed to be used only on one side and the indents should be more than .010" from the centers of two indents or no closer to the block's edge than .040".

Calibration kits are also available from Starrett. No facility with a hardness tester in use should be without a calibration kit. These kits come with from 3 to 20 calibrated test blocks and the serialized penetrator that was used to inspect each of the blocks in the set. When a discrepancy is detected in a tester, these kits allow you to determine the direction to proceed to resolve the issue.

Rockwell Test Blocks	
Part No.	**Description †**
PT05050	RC63 Test Block
PT05051	RC60 Test Block
PT05052	RC55 Test Block
PT05053	RC50 Test Block
PT05054	RC45 Test Block
PT05055	RC40 Test Block
PT05056	RC35 Test Block
PT05057	RC30 Test Block
PT05058	RC25 Test Block
PT05059	RB90 Test Block
PT05060	RB80 Test Block
PT05061	RB70 Test Block
PT05062	RB60 Test Block
PT05063	RB50 Test Block
PT05064	RB40 Test Block
PT05065	RB30 Test Block
PT05067	RB20 Test Block
PT05068	RB10 Test Block
PT05069	RA80 Test Block
PT05091	RA70 Test Block
PT05092	RA60 Test Block
PT05100	RF100 Test Block
PT05101	RF90 Test Block
PT05102	RF80 Test Block
PT05103	RF70 Test Block
PT05104	RF60 Test Block
PT05105	RF50 Test Block
PT05106	RE100 Test Block
PT05107	RE90 Test Block
PT05108	RE80 Test Block
PT05112	RE70 Test Block
PT05113	RE60 Test Block

† Values expressed are not exact but will range within acceptable limits

Rockwell Test Blocks	
Part No.	**Description †**
PT05114	RE50 Test Block
PT05115	HR30N80 Test Block
PT05122	HG30N70 Test Block
PT05123	HR30N60 Test Block
PT05124	HR30N50 Test Block
PT05125	HR30N40 Test Block
PT05127	HR30T80 Test Block
PT05128	HR30T70 Test Block
PT05129	HR30T60 Test Block
PT05130	HR30T50 Test Block
PT05177	HR30T40 Test Block
PT05178	HR30T30 Test Block
PT05179	HR30T20 Test Block
PT05180	HR30T10 Test Block
PT05181	HR15N90 Test Block
PT05182	HR15N80 Test Block
PT05183	HR15N70 Test Block
PT05184	HR15T90 Test Block
PT05185	HR15T80 Test Block
PT05186	HR15T70 Test Block
PT05187	HR15T60 Test Block
PT05188	HR45T70 Test Block
PT05189	HR45T60 Test Block
PT05191	HR45T50 Test Block
PT05192	HR45T40 Test Block
PT05193	HR45T20 Test Block
PT05194	HR45T10 Test Block
PT05195	HRH90 Test Block
PT05196	HRH80 Test Block
PT05197	HRR120 Test Block
PT05198	HR30Y Test Block
PT05199	HRM Test Block
PT05200	HR15W Test Block

† Values expressed are not exact but will range within acceptable limits

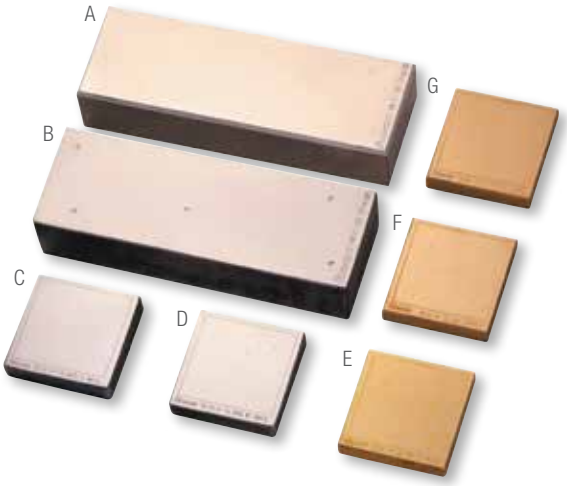

Rockwell and Brinell test blocks at a variety of hardness levels. (A) Aluminum Brinell, (B) Steel Brinell, (C) Vickers, (D) Rockwell, (E) 187.5kg/2.5mm Brinell, (F) Extra-Soft Rockwell and (G) Brass Rockwell.

Hardness Testing

Test Blocks and Accessories for Hardness Testers

Brinell Test Blocks		
Part No.	**EDP**	**Description**
PT05257	67956	3000kg High Brinell Test Block
PT05258	67957	3000kg Low Brinell Test Block
PT05259	67958	500kg High Brinell Test Block
PT05260	67959	500kg Low Brinell Test Block

Master Calibration Kits		
Part No.	**EDP**	**Description**
PT05272	67969	HRC 3-Block Master Calibration Kit
PT05273	67970	HR30N 3-Block Master Calibration Kit
PT05276	67971	HRB 3-Block Master Calibration Kit
PT05277	67972	C&B Scale 20-Block Master Calibration Kit
PT05278	67973	C&30N Scale 6-Block Master Calibration Kit

PT05272 HRC 3-Block Master Calibration Kit

Standard and special anvils

Anvils and Table			
Letter	**Part No.**	**EDP**	**Description**
A	PT05267	67964	Pedestal Anvil
B	PT05268	67965	2-1/2" Flat Anvil
C	PT05269	67966	Small "V" Anvil
D	PT05270	67967	Large "V" Anvil
E	PT05271	67968	8" Anvil Testing Table

Penetrators			
Letter	**Part No.**	**EDP**	**Description**
E	PT05245	67944	C Regular, No Thread
E	PT05246	67945	Indentron with Internal Thread
G	PT05247	67946	Versitron/New Age with External Thread
E	PT05248	67947	N Regular, No Thread
D	PT05249	67948	1/16" (1.6mm) Ball with Holder
C	PT05250	67949	1/8" (1.7mm) Ball Complete with Holder
B	PT05251	67950	1/4" (6.4mm) Ball Complete with Holder
A	PT05252	67951	1/2" (12.7mm) Ball Complete with Holder
	PT05253	67952	1/16" (1.6mm) Carbide Ball Only, with Certification
	PT05254	67953	1/8" (1.7mm) Carbide Ball, with Certification
	PT05255	67954	1/4" (6.4mm) Carbide Ball, with Certification
	PT05256	67955	1/2" (12.7mm) Carbide Ball, with Certification
	PT05261	67960	Heavy Load 5kg, 110RV5 Vickers Test Block
F	PT05264	67961	Heavy Load Indentor Vickers
	PT05265	67962	Min. Brinell 2 1/2mm Ball
	PT05266	67963	Min. Brinell Block 187 1/2kg, 2-1/2mm Ball

Penetrators - Contact Starrett for more information

Includes base instrument, impact device D, calibrated test block, custom carry case, cleaning brush and operation manual

Hardness Testers

3811A Compact Hardness Tester

The 3811A is a state of the art, digital portable hardness tester, designed to test the hardness of large, hard metal parts.

The 3811A combines fast test speeds with ample memory and output. It performs tests that easily convert to most popular hardness scales such as Rockwell, Brinell, Vickers and Shore.

This compact hardness tester is loaded with useful functions usually found only on high priced models.

3811A Hardness Tester and Accessories

Cat. No.	EDP	Description
3811A	69881	Digital portable hardness tester with impact device D,calibrated test block, cleaning brush and carry case
HT-1800-110	20940	D+15 Impact Device
HT-1800-115	20941	DL Impact Device
HT-1800-125	20942	G Impact Device
HT-1800-130	20943	C Impact Device
HT-1800-120	20944	DC Impact Device
HT-1800-100	20945	Replacement D Impact Device
HT-1800-102	20946	Replacement Cable For All Impact Devices
HT-2500-105	20947	Replacement Impact Body
HT-1300-01	20948	Leeb D Test Block
HT-1100G-01	20949	Leeb G Test Block
S38R	67285	Support Ring Set

3811A Portable Hardness Tester with Integrated, Multi-functional Features

Style	Applications
D+15	Very narrow contact area with a set backed measurement coil. Measures hardness in grooves and recesses. Weight: 80g
DC	Extremely short impact device. Used for very confined spaces such as, holes, cylinders and internal measurements
C	Reduced impact energy probe (2 ft-lb) for measuring hardness of coatings, surface hardened, thin wall or impact sensitive components. Applies superficial indentation. Weight: 75g
G	Enlarged test tip and increased impact energy range (72 ft-lb – approx. 9 times the D). For lower quality finishes measuring in the Brinell range only (max. 650 HB). Designed for components like heavy castings, forgings. Weight: 250g
DL	Needle front section with 4mm diameter and 50mm length. Ideal for testing in confined spaces, the base of grooves and special components like gear wheels. Steel/Cast steel

Specifications

- Accuracy: ±0.5% (referred to L=800)
- Repeatability accuracy: ± 4L units (L=Leeb)
- Measuring range: 200-960 HL
- For steel and cast steel, alloy tool steel, stainless steel, grey cast iron, spheroidal iron, cast aluminum, brass, bronze, wrought copper alloy
- Tool steel should be about 1" thick solid material or larger
- Operating temperature: 5-104 °F
- Dimensions: 5.96 x 2.938 x 1.270" (150 x 74 x 32mm)
- Weight: 8.6 oz. (245 grams)

Features

- Leeb style tester designed for large, hard parts – load the impact body and place the impact device on your test piece
- Easy to use keypad operation – push the button to begin testing and obtain reading
- Auto identification of impact device
- Large LCD display with back light
- USB ouput
- Automatic conversions to Rockwell, Brinell, Vickers and Shore
- Automatic mean value as well as Min and Max values
- Uses two AA alkaline batteries with low power indicator
- Memory capacity (100 groups)
- Optional impact devices and special support rings

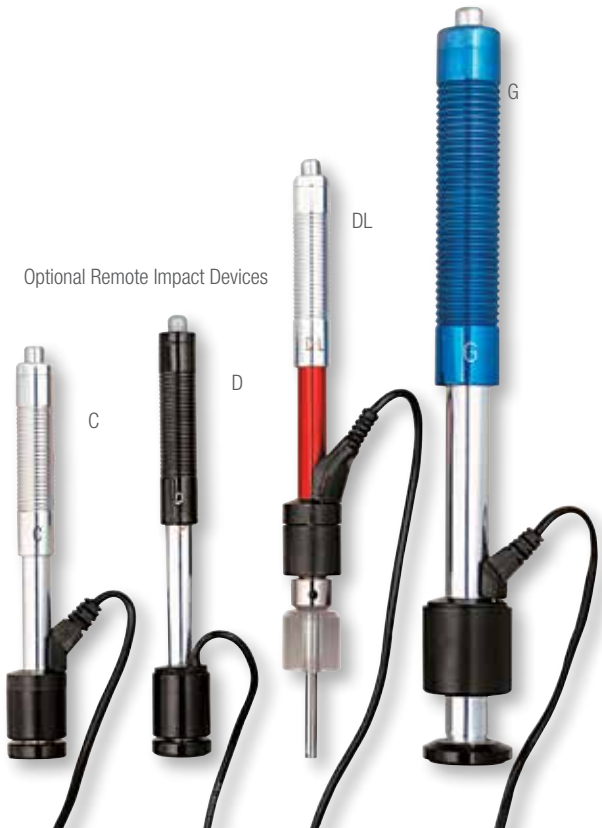

Hardness Testers

3810A Digital Portable Hardness Tester

The 3810A is a state-of-the-art digital instrument designed to test the hardness of large hard metal parts. Loaded with useful functions such as USB output and a built in printer, the 3810A is an ideal choice for fast, accurate hardness testing.

This versatile tester can perform tests that easily convert to the most popular hardness scales, including Rockwell, Brinell, Vickers and Shore.

The tester is easy to use. Simply load the impact body, place the impact body on your test piece, then push the button to begin testing.

The 3810A is designed to test large hard parts that cannot be brought to a bench top machine. For example, tool steel should be close to 1" thick of solid material. The 3810A comes with a D impact device, calibration block, cleaning brush, manual and a carrying case.

3810A Hardness Tester and Accessories

Cat. No.	EDP	Description
3810A	69871	Tester, D impact device, calibration block, cleaning brush, operation manual, custom carry case
HT-1800-110	20940	D+15 impact device. Very narrow contact area with set backed measurement coil. Measures hardness in grooves and recesses.
HT-1800-115	20941	DL impact device. Needle front section with 4mm diameter and 50mm length. For testing in confined spaces such as groove bases and special components such as gear wheels.
HT-1800-125	20942	G impact device. For components such as heavy castings and forgings. Enlarged test tip and increased impact energy range. For lower quality finishes measuring in the Brinell range only. G block required.
HT-1800-130	20943	C impact device. Reduced impact energy probe for measuring hardness of coatings and surface hardened, thin wall or impact- sensitive components. Applies superficial indentation.
HT-1800-120	20944	DC impact device. Very short for confined areas such as internal bores for various inside measurements.
HT-1800-100	20945	Replacement D impact device. Universal standard probe for a wide variety of applications.
HT-1800-102	20946	Replacement cable for all impact devices
HT-2500-105	20947	Replacement impact body D
HT-1300-01	20948	Leeb D test block
HT-1100G-01	20949	Leeb G test block
S38R	67285	Support ring set

3810A

Specifications

- Accuracy: ±0.5% (referred to L=800)
- Repeatability accuracy: ±4L units (L=Leeb)
- Measuring range: 200-960 HL
- Materials: steel & cast steel, alloy tool steel, stainless steel, grey cast iron, spheroidal iron, cast aluminum, brass, bronze, wrought copper alloy
- Battery type: AA alkaline (4)
- Operating temperature: 5-104 °F
- Dimensions: 150 x 74 x 32mm
- Weight: 245 grams
- Includes 3810A tester, impact device D, calibration test block, cleaning brush, operation manual, custom carry case
- Available options include DC, D+15, DL, G, C impact devices, and special support rings

Functions

- Easy to use keypad operation
- Auto identification of impact device
- Large LCD display with back light
- USB ouput
- Automatic conversions to: Brinell, Rockwell B & C, Vickers and Shore
- Automatic mean value as well as Min & Max values
- Battery indicator
- Memory capacity (100 groups)

Hardness Testers

Technical Data for Starrett Hardness Impact Devices

Technical Data for Impact Devices		D/DC/DL	D+15	C	G
Impact Energy		11 Nmm	11 Nmm	3 Nmm	90 Nmm
Mass of the Impact Body		5.5g	7.8g	3.0g	20g
Test Tip	Hardness	1600 HV	1600 HV	1600 HV	1600 HV
DL: 7.3 g	Diameter	3mm	3mm	3mm	5mm
	Material	Tungsten carbide	Tungsten carbide	Tungsten carbide	Tungsten carbide
Impact Device	Diameter	20mm	20mm	20mm	30mm
	Length	147/86mm	162mm	141mm	254mm
	Weight	75/50 g	80 g	75 g	250 g
Max. Hardness of Sample	940 HV	940 HV	1000 HV	650 HB	
Preparation of Surface	Roughness class ISO	N7	N7	N5	N9
	Max. roughness depth Rt	10µm	10µm	2.5µm	30µm
	Average roughness Ra	2µm	2µm	0.4µm	7µm
Min. Weight of Sample	Of compact shape	5kg	5kg	1.5kg	15kg
	On solid support	2kg	2kg	0.5kg	5kg
	Coupled on plate	0.1kg	0.1kg	0.02kg	0.5kg
Min. Thickness of Sample	Coupled	3mm	3mm	1mm	10mm
	Min. thickness of layers	0.8mm	0.8mm	0.2mm	—
Indentation of Test Tip with 300 HV	Diameter	0.54mm	0.54mm	0.38mm	1.03mm
	Depth	24µm	24µm	12µm	53µm
Indentation of Test Tip with 600 HV	Diameter	0.45mm	0.45mm	0.32mm	0.90mm
	Depth	17µm	17µm	8µm	41µmC
Indentation of Test Tip with 800 HV	Diameter	0.35mm	0.35mm	0.30mm	—
	Depth	10µm	10µm	7µm	—

Application and Hardness Ranges for Starrett Hardness Impact Devices

Optional Impact Devices					
Material	**HRC**	**HRB**	**HB**	**HV**	**HSD**
Impact Device – D, DC Measuring Range 200-900†					
Steel	20.0-67.9	59.6-99.5	80-647	80-940	32.2-99.5
C.W. Tool Steel	20.4-67.1			80-898	
Gray Cast Iron			93-334		
Nodular Cast Iron			131-387		
Cast Aluminum			30-159		
Brass		13.5-95.3	40-173		
Bronze			60-290		
Copper			45-315		
Impact Device – D+15, Measuring Range 300-900† (not shown)					
Steel and Cast Steel	19.3-67.9		80-638	80-937	33.3-99.3
Impact Device – C, Measuring Range 350-950†					
Steel and Cast Steel	20.0-69.5		80-683	80-996	31.9-99.6
Impact Device – G, Measuring Range 300-750†					
Steel and Cast Steel		47.7-99.9	90-646		
Gray Cast Iron			92-326		
Nodular Cast Iron			127-364		
Impact Device – DL, Measuring Range 300-900†					
Steel and Cast Steel	20-68	37-100	80-650	80-940	30-97

† Leeb Measuring Range

NEW!

Roughness Testers

Surface Roughness Testers

SR160, SR300 AND SR400

The SR160 is the latest to join a line of unique equipment to compliment the SR300 and SR400. Starrett surface roughness testing equipment is simple, accurate and of high quality. These units are tough, shock tested, and capable of withstanding the demands of a shop environment. Our surface roughness testers meet the increasing requirements across industries like safety, aerospace, automotive, precision bearings, and general manufacturing.

SR300/SR400

Surface Roughness Testers		
Cat. No.	**EDP**	**Description**
SR160	72584	SR160 display with 5mm traverse unit, pick-up, diamond stylus, calibration standards, manual, carrying case, and international power adaptors.
SR300	21000	SR300 display with 17.5mm traverse unit, TalyProfile Lite software, pick-up, diamond stylus, calibration standard, manual and carrying case.
SR400	21001	SR400 display with 25mm traverse unit, TalyProfile Lite software, pick-up, diamond stylus, calibration standard, manual and carrying case.

Accessories - SR160		
Cat. No.	**EDP**	**Description**
SR-112-3188	72667	Magnetic base
SR-112-4545	20220	USB charger
SR-112-5085	72666	Hard transport case
SR-112-2937	20968	Extra reference standard
Accessories - SR300 and SR400		
Cat. No.	**EDP**	**Description**
SR-112-1534	20962	Reference standard
SR-112-2693	20964	Column and stand
SR-112-4545	20220	USB charger
SR-112-1517	20963	Support stand
SR-112-4570	20998	USB thermal printer
SR-112-4571	20999	Thermal paper
SR-112-1645	73033	Pair of 115mm (5.85") vee blocks
SR-112-2694	73036	Precision vise
SR-112-2695	73037	Ball joint vice
Software		
Cat. No.	**EDP**	**Description**
SR-112-3680	20952	TalyProfile Gold - 2D analysis
SR-112-3681	20953	TalyProfile Silver - 2D analysis
Parameters		
Cat. No.	**EDP**	**Description**
SR-112-4607	73038	AN-10 ISO 13565 automotive parameters for S116
SR-112-4608	73039	AN-11 statistics madule for S116
SR-112-4609	73040	AN-12 ISO primary parameter set for S116
Pick-Ups		
Cat. No.	**EDP**	**Description**
SR-112-1510	20961	7.875" (200mm) extension rod with lead
SR-112-1502	20956	Standard pick-up with 200µin (5µm) stylus
SR-112-1503	20957	Standard pick-up with 400µin (10µm) stylus
SR-115-P28495	21004	Small bore pick-up
SR-112-1505	20959	Right angle pick-up
SR-112-1506	20960	Recess pick-up
SR-112-1524UB	73028	Pick-up with chisel edge stylus
SR-112-1525	73029	Pick-up lift mechanism
SR-112-1531UB	73030	Pick-up with slide skid
SR-112-1599UB	73032	Pick-up with shoe
SR-112-2672UB	73034	Recess pick-up (2µm, 80µin, tip radius)
SR-112-2673UB	73035	Small bore pick-up (2µm, 80µin, tip radius); SR-112-4701 is preferred
SR-112-4707	73041	O-Ring pick-up
SR-112-4708	73042	25mm recess pick-up
SR-112-4709	73043	15mm recess pick-up
SR-12-4710	73044	O-Ring pick-up narrow
SR-112-4712	73046	O-Ring pick-up; deep 25mm
SR-112-4713	73047	O-Ring pick-up; deep 25mm with 2µm tip
SR-112-4714	73048	Flat skid pick-up
SR-112-4715	73049	Standard 112/1502 pick-up with 2.5µm tip
SR-112-4716	73050	Side skid pick-up 112/1531 with 2µm tip

All accessories listed above are available for order. Please contact your local Starrett representative for additional or special requirements.

SR160

Roughness Testers

TalyProfile

ADVANCED SURFACE FINISH ANALYSIS

TalyProfile is a dedicated PC based software package designed for use with the SR300 and SR400 instruments. Three versions are available. TalyProfile "Lite" has all functions typically used for a shopfloor inspection. TalyProfile "Silver" has enhanced features for R&W parameters, a statistics module and full report printing. TalyProfile "Gold" has complete laboratory analysis functions.

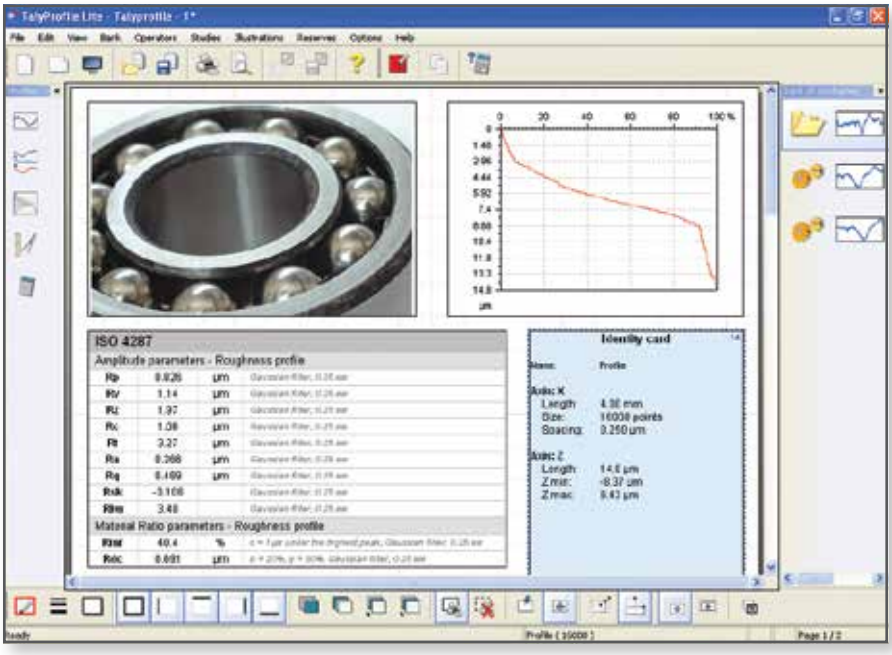

TalyProfile	Lite	Silver	Gold
Surtonic S-series acquisition	x	x	x
Desktop publishing templates	x	x	x
Multi-language support	x	x	x
EN, FR, DE, ES, IT, PL, CN, KR	x	x	x
Leveling	x	x	x
Symmetries	x	x	x
Zoom	x	x	x
ISO 4287	x	x	x
Material Ratio Curve	x	x	x
Area of a hole/peak	x	x	x
Profile parameters and curves	x	x	x
Roughness and waviness curves	x	x	x
Distance measurement	x	x	x
Multiple file format reports		x	x
Report printing		x	x
Form Talysurf data import		x	x
Tolerance limits (pass/fail)		x	x
Data file explorer		x	x
ISO 13565 Automotive		x	x
Interactive Mr curve		x	x
Step height measurement		x	x
Form removal			x
Filtering by FFT			x
Thresholding			x
Frequency spectrum			x
Power spectrum density			x
Retouch profile point			x
Rk parameters			x
Rk parameters curves			x
ISO 12085 R&W motifs			x

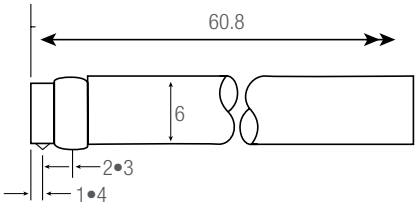

Standard Pick-Up
for general surface roughness measurement
Code SR-112-1502 (5µm tip radius)
Code SR-112-1503 (10µm tip radius)

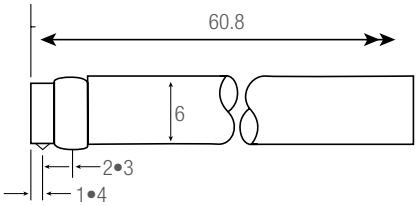

Right Angle Pick-Up
for measurement at right angles to the direction of traverse
Code SR-112-1505

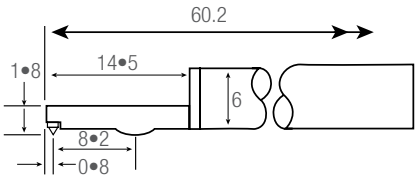

Small Bore Pick-Up
for general use in small bores, grooves and on narrow surfaces
Code SR-155-P28495

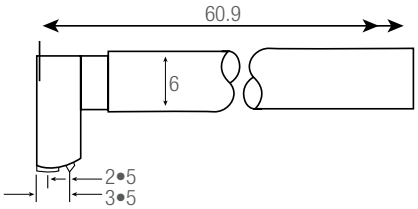

Recess Pick-Up
for measuring into deep recess
Code SR-112-1506 recess 5.7mm (0.23")

TalyProfile Parameters

Roughness parameters obtained by filtering: Ra, Rq, Rt, Rp, Ry, Rku, Rsk, RSm, Rz, RΔq, RTp, RHTp, Rlo, RPC, RzJIS, R3z

Parameters on the raw profile (unfiltered): Pa, Pq, Pt, Pp, Pv, Pku, Psk, PSm, Pz, PΔq, PTp, PHTp, PLo, PPc

Parameters obtained by double filtering (DIN 4776): Rk, Rpk, Rvk, MR1, MR2, A1, A2, Rpk,

Parameters obtained by the motifs method ("R&W)*: R, AR, Pt, Rx, SR, SAR, Nr, Kr, W, AW, Wte, Wx, SW, SAW, Nw, Kw, Rke, Rpke, Rvke, Trc, HTrc

** Only with gold or silver versions*

Electronic Durometers

3805B Electronic Durometer

The 3805B meets ASTM D2240-05, "Standard Method For Rubber Properties - Durometer Hardness". It is designed to fit comfortably and firmly in your hand. Its large LED display and simple three button control make the 3805B Durometer easy to use.

The 3805B measures Shore A values for a wide variety of soft materials including: rubber: soft vulcanized (i.e. tire), natural nitrile; elastomeretric materials (rubber and rubber-like): GR-S, GR-1, neoprene, thiokol, flexible polyacrylic esters; other softer materials including wax, felt, leather, etc. (materials that would normally yield under fingernail pressure).

Features and Specifications

- Meets ASTM standards for durometer hardness
- Extra large LED display
- Simple 3-button control
- Auto Hold feature
- Measuring range: 0-100 HSA
- Deviation: <1% H
- Resolution: 0.5 H
- Accurate and repetitive deviation = 20~90HSA
- HSA <±1 grade
- Custom carrying case

3805B Electronic Durometer		
Cat. No.	**EDP**	**Description**
3805B	69882	3805B Electronic Durometer in plastic case
SRB-3	68200	3 Rubber Test Block Certified Set

3805B

Thickness Gages

3812 Ultrasonic Thickness Gage

The 3812 Ultrasonic Thickness Gage is a state-of-the-art digital ultrasonic thickness gage packed with features typically found only on high end models.

It measures the thickness of metallic and non-metallic materials such as steel, aluminum, titanium, plastics, ceramics, glass and any other good ultrasonic wave conductor that has parallel top and bottom surfaces.

This dynamic ultrasonic thickness gage accurately displays readings in either inch or millimeter units after a simple calibration to a known thickness or sound velocity.

3812 Ultrasonic Thickness Gage and Accessories		
Cat. No.	EDP	Description
3812	67668	3812 Ultrasonic Thickness Gage, software, USB cable, couplant gel and carry case
UTG2800-400	72686	Replacement probe (straight) for 3812

Features and Specifications

- 4 digit LCD display with back light
- Upper/Lower limit preset alarm
- Measurement and scanning capabilities
- Adjustable sound velocity
- Extended memory
- 20 memory groups (100 files/group)
- Minimum display unit: 0.001" (0.01mm) selectable
- .040-12.0" measuring range (in steel with standard probe)
- 3280-32805ft/s (1000-9999m/s) sound velocity range
- 32-122 °F operating temperature
- 5MHz Frequency
- 4Hz update range
- USB output
- Power supply: Two 3V AA alkaline batteries with approximately 100 hours of life (with the backlight off)
- Power consumption: Working current is less than 3V
- Accuracy: ± (0.5% thickness + .001")
- Dimensions: 5.90 x 2.91 x 1.30" (150 x 74 x 33mm)
- Weight: 8.6oz (245g)
- Includes tester and cables, software, USB cable, couplant gel and a rugged, form fit carrying case

3812

Thickness Gages

3813 Coating Thickness Gage

The 3813 Coating Thickness Gage is a state-of-the-art coating thickness gage that utilizes the characteristics of both eddy current and magnetic induction to perform two types of thickness calculation.

The gage uses an integrated probe to automatically determine whether the substrate is ferrous or non-ferrous. Then, it either detects the thickness of non-magnetic coating on a magnetic substrate (ferrous) or the insulating coating on a non-magnetic conductive substrate (non-ferrous).

Testing performance is non-destructive and extremely accurate. The 3813 is ideal for a broad range of applications in manufacturing, engineering and commercial inspection.

3813 Thickness Gage		
Cat. No.	EDP	Description
3813	69883	Coating Thickness Gage with steel and aluminum substrate samples, four calibrated thickness samples, batteries, manual and case

Features and Specifications

- Measuring range: 0-40mils (0-1000µm) max.
- Resolution: 0.1µm/0.1mils (0-99µm) or 1µm (over 100µm)
- Guaranteed tolerance (after one-point calibration): ±1-3%n or 2µm (whichever is greater)
- 4-digit display, .40" (10mm) height,
- Minimum measuring area: .20 x .20" (5 x 5mm)
- Minimum radius of curvature: Convex: .12" (3mm), Concave: 1.2" (30mm)
- Minimum substrate thickness: Ferrous: 20 mils (0.5mm), Non-ferrous: 2 mils (50µm)
- Zero calibration
- Foil calibration
- Maximum surface temperature of test object: 302 °F (maximum contact time 2 seconds)
- Power source: Four AA batteries
- Includes steel and aluminum substrate samples
- Includes four calibrated thickness samples
- Dimensions: 6.39 x 2.74 x 1.27" (161 x 69 x 32mm)
- Weight: 9oz. (260g)

3813

PRECISION MAKES THE DIFFERENCE

Starrett® BYTEWISE

NO CONTACT IS THE SOLUTION.

Profile360™ is an in-line, real-time, non-contact solution for continuously monitoring key profile dimensions in complex shapes such as rubber, ceramic, plastic, and wood-plastic composite extrusions, roll-formed metal profiles, and profiled wire.

Starrett®

(978) 249-3551 • starrett.com

Follow us!

SPECIAL GAGING

Special Gaging

The Starrett Special Gage Division

Even with our extremely broad catalog of products, some application measurement requirements can not be met with a standard tool – they require a custom solution.

One way Starrett stands out from other precision tool providers is our willingness to work directly with our customers to develop custom tools and gages. Established over 50 years ago, our Special Gage Division is an independent group within the Company that devotes its total effort to developing and building special gages.

Once we determine that no "off-the-shelf" product is applicable, our engineers begin a dialog with the customer to develop a custom tool for the specific task.

Together, we discover what you want and need. Then, we design and build a special tool or gage that will perform to your expectations – with rugged construction, easy and intuitive operation, Starrett quality and guaranteed to meet your specifications for accurate, reliable part measurement.

Design work is treated in a strictly confidential manner. Design-and-build prices are quoted at no charge. Prices are fixed at order entry.

Single-Source Reliability

We make and use electronic indicators, AGD dial, electronic and mechanical micrometer heads, and all of the other tools or gages that provide the output from the custom gage.

We also make DataSure® WIreless Data Collection Systems, which we have integrated into an increasing number of special gages so measurement data can be gathered and recorded with 100% reliability.

Simply put, our service and expertise are second to none – we control the entire process from concept through design, manufacture, inspection and delivery.

We offer the resources of this unique problem-solving division to innovate, design, and build the equipment you need to control product quality and reduce dimensional gaging costs.

The following pages show some examples of gages. we have developed and built.

Contact Us

We encourage you to contact us directly to discuss your application.

Tel.: (978) 249-3551 x407 | **FAX:** (978) 249-3699

E-mail: specialgage@starrett.com

The L. S. Starrett Company
Special Gage Division
121 Crescent Street
Athol, MA 01331-1915

Custom designed and built
Area Flow Gage

Custom Height Gage with a 78.7" (2000mm) range and resolution of .0005"

Special Gage Division Mission

We design and build dimensional measuring instruments that provide guaranteed performance to meet our customers' specifications. We are in the business of solving measuring problems when standard gages cannot be used.

Find out more about Starrett Custom Solutions at: **starrett.com/custom**

Special Gaging

Measuring Hot Steel During Rolling, Forging or Extruding

Starrett Special Gage was asked by a customer to develop a new gage for measuring hot steel flat stock during the rolling process.

The old measuring device utilized a gage with a crude fractional dial that did not provide accurate or repeatable results. In addition, it often stuck to the hot steel and ruined the piece being measured. Even worse, on several occasions, the old process caused burn injuries to the operator.

The customer needed a new solution that provided precise and reliable results, a much lower scrap rate, and ensured operator safety.

The application presented some unique challenges. Any operation that requires contact with hot steel is dangerous and must be of very brief duration.

From Problem to Solution

After collaboration between the engineering staffs of our customer and the Starrett Special Gage group, a radically different gage was developed that met all of the design criteria.

The Hot Steel Gage

- Takes measurements quickly, with only two seconds of contact
- Uses an electronic indicator with a hold feature to lock the reading so it can be safely read away from the dangerous area, and in better light conditions
- Nickel plated to minimize radiant heat transfer
- The operator's hand stays 12" away from the hot steel
- The gage is very accurate, measuring to ±.003"

A Family of Gages

A number of satisfied companies are now using the Hot Steel Gage. Starrett has developed a family of related products with capacities up to 12" (in 1" or 3" increments) and 2' or 3' in-reach capacity. Other variations have modified jaws for measuring round stock.

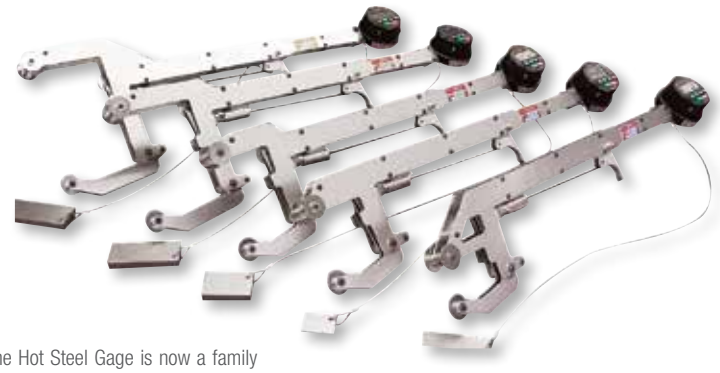

The Hot Steel Gage is now a family of products with capacities up to 12"

Hot Steel Gage with a DataSure® End Node

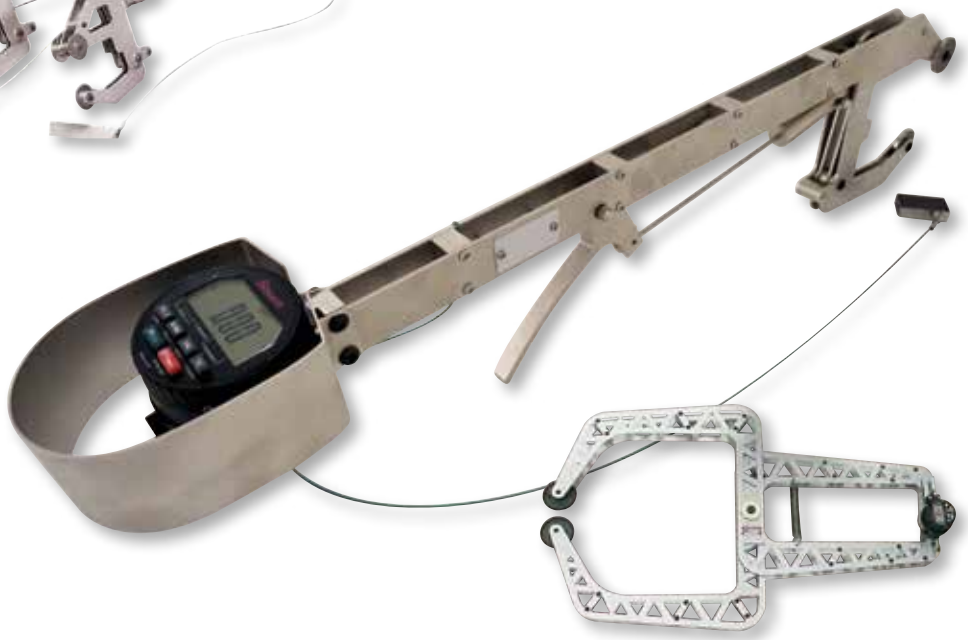

Variation on a theme: A large caliper with long reach for web thickness of train tracks hot or cold.

DataSure® Wireless Data Collection

Starrett introduced the DataSure® Wireless Data Collection System several years after the hot steel gage was developed and it was a perfect fit for this application.

With DataSure®, the measurement data can be recorded and sent to a data collection application with 100% reliability immediately after it is recorded by the indicator.

Many manufacturers now include DataSure when they order these gages, and existing gages have been field-retrofitted.

Special Gaging

Container Fit Measurement for the Food and Plastics Industries

PI-GAGES FOR I.D. AND O.D.

Starrett PI-Gages protect product quality by maintaining critical diameter tolerances of plastic lids and containers where shrinkage, temperature and mold affect parts manufacturing. The diameter of these parts is critical to the sealing integrity between lids and containers.

We have developed a wide variety of hand held and fixture gages for many related applications. Starrett PI-Gages measure most diameters accurately to within ±.001.

Designed to measure any flexible circular part, variations of these gages have been in use for over 25 years, and have become the standard of the industry.

Fixtures for Large O.D. or I.D. Measurement

Metal band I.D. fixture for 1/2-gallon container

Master in position to set indicator to zero

Top of 1/2-gallon container in measuring position

PI-Plate Gage for O.D.

This gage ensures container quality requirements with an easy-to-use gage system. With either electronic indicators (and data collection), or dial indicators, this gage measures most product diameters to ±.001" accuracy.

Each gage from the 2" to 4" range through the 10" to 12" range is set to zero with the master. Push the button on the indicator to insert a part and release the button to gage a part within ±.025" diameter range from the master size. They provide quick changes from size-to-size, ease of use, and ±.001 accuracy on most diameters will ensure process control.

Special Gaging

Pneumatic Food Tray Measurement

This gage measures width, length, and height of food trays.

Full part length contacts ensure the correct dimensions for every measured parameter.

The gage employs a system of pneumatics to withdraw probes for quick, easy loading and unloading of trays.

A steel master is used to replicate a perfect part. The electronic indicators are then set to their mean values.

The result is a reliable and accurate system with fast throughput to measure a specialized, complex part.

Measurement of the Interface of a Coffee Cup and Lid

Most of us have heard the story – a large fast food chain is sued because the lid came off of a Styrofoam coffee cup and scalded a customer. The company lost the suit and the word went down to find a way to make sure that the lid stays on and the cup does not leak – a specialized, difficult measurement that required a custom solution.

The hand held gage pictured provides the perfect solution to this application. The cup and lid are both measured with the same gage, with a simple sensor change to go from one to the other.

Each are measured to within ±.001".

The result is a reliable and accurate system that keeps the lid on the cup and prevents leaks. The fast food customer is safe from hot coffee and our customer is safe from costly lawsuits.

Special Gaging

Turbine Compressor Rotor Spacers

This inspection fixture checks gas turbine engine compressor rotor spacers for radial size and runout at five stages.

It represents a specific Starrett special gage capability — the designing and building of large, ultra-precise fixture gages mounted on Starrett precision granite surface plates which meet or exceed U.S. Federal Specification GGG-P-463C.

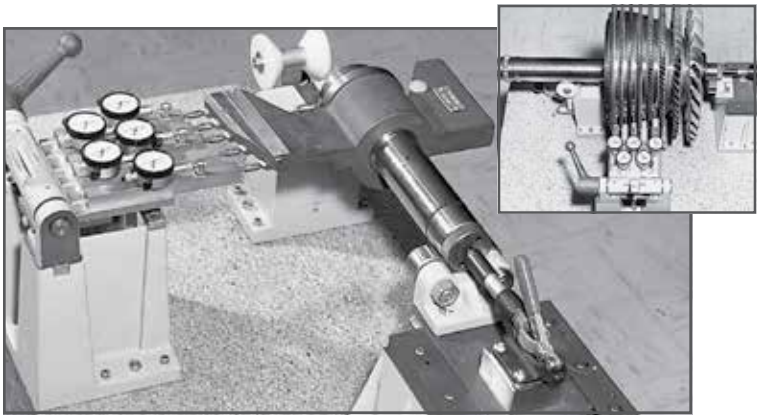

Inset: Rotor turns 360º on its axis to determine runout and radial deviation.

Turbine Nozzle Diaphragm Opening Gage

This gage checks three critical dimensions in the nozzle. This is an older and less complex design than the gage above, and it does not measure the radial height dimension.

Gage on setting master

Test Master segment

Aerospace

AREA FLOW GAGE

Area Flow Gages measure the minimum area openings of turbine engine nozzles. Area readings are in .001 square inch resolution. It uses eight or more contacts that reach into the throat of the turbine nozzle openings. The recorded measurements are transferred via hydraulic cylinders to a dial indicator. Using mechanical linkage and hydraulics the algebraic area is transferred to the indicator or electronic probe at the top of the gage. Openings of segments are matched and located opposite one another on the engine circumference to provide a balanced air flow. These gages are custom designed for each stage of the turbine and are critical to proper engine performance and operation.

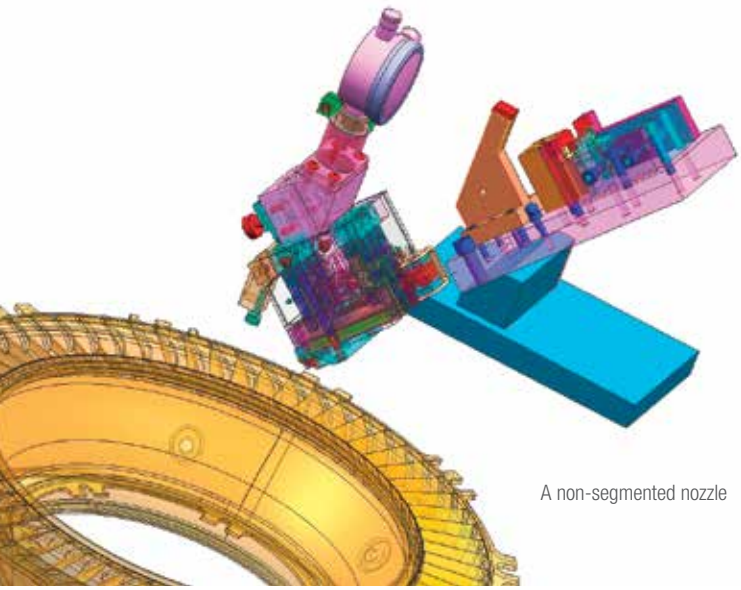

A non-segmented nozzle

Special Gaging

High Precision Cylinder Measurement

We offer a full range of snap gages that utilize highly polished carbide contacts to measure cylindrical parts to as close as ±.0001".

The gage has an insulated handle with a thumb activated contact lift and a bump stop.

Each gage with optional master can measure a 1" range with exceptional accuracy.

They are available as bench or handheld gages.

Adjustable Range Snap Gages

These snap gages have a lightweight aluminum frame and low-friction ball bushing motion transfer.

The indicator can be rotated and locked for easy viewing in any position.

Ball contacts or contacts for grooves are also available. They are also available with electronic indicators.

They have simple and rugged construction including sturdy dovetail slides for range adjustment. This is a proven low maintenance gage with a long trouble-free life.

Three standard size ranges are available: 6-10", 10-14", and 14-18".

Measuring a turbine component.

Special Gaging

Outside and Inside Diameter Gages

Individually designed and built for each application, these gages have a low-friction bushing direct-transfer mechanism and will repeat within one graduation.

It is made of aluminum for light weight and to preserve the proper "feel". Gage contacts and rest feet are carbide for long wear.

The steel tube master has carbide rests and pads for accuracy and wear control.

Shown here is an angled outside diameter gage in position on the setting master to set the indicator to zero.

This specific gage was designed to measure the diameter on conical parts.

Angled outside Diameter Gage with Setting Master

Inside Diameter Gage

Inside diameter gage, moderately deep reach. Design permits inside measuring, while clearing hub obstructions. (Conventional straight bar would be used otherwise).

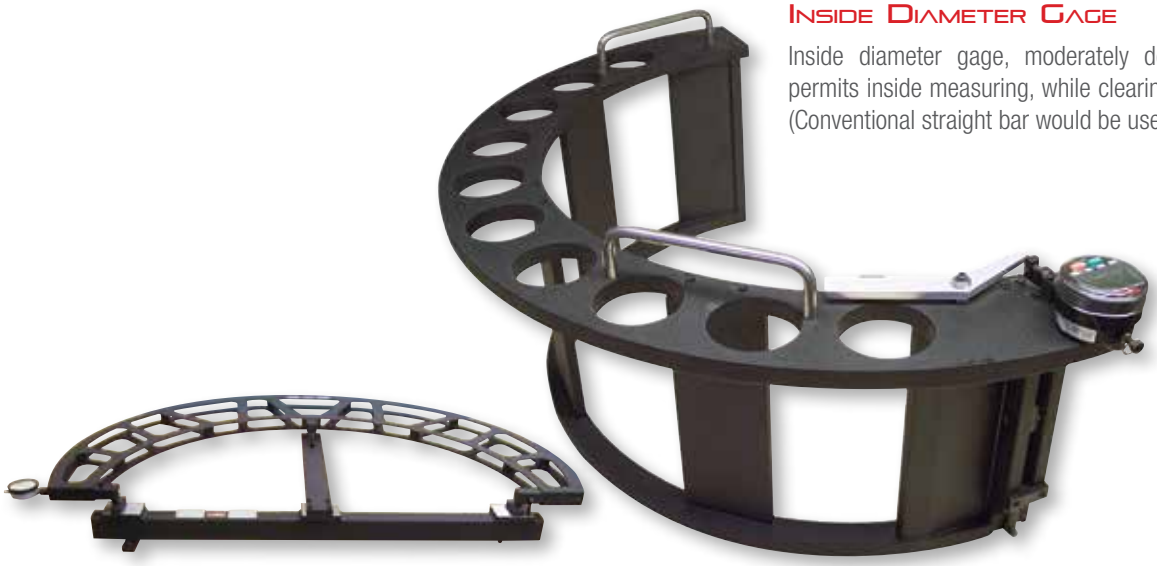

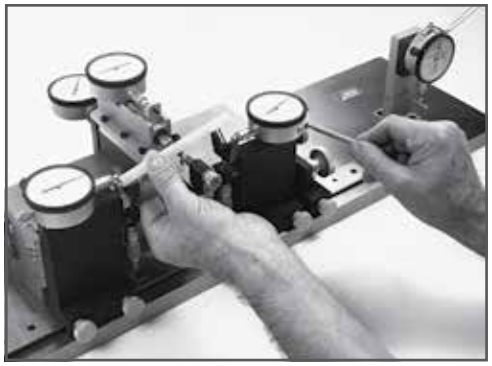

Inserting ceramic cylinder in gage to check squareness and parallelism of ends, longitudinal bow and out-of-roundness

Multi-Readout and Special Purpose Gages

This complex five-station fixture gage checks critical dimensions and geometry of precision cylinders.

This single fixture checks overall length to ±.010", squareness and parallelism of the ends to within .002", longitudinal bow to within .005", out-of-roundness to within .003" T.I.R, and wall thickness to within ±.003".

The gage includes micrometer head height adjustment of the work-staging V-rests. It has precision ball slide mounts for dial indicators at two of the stations and wear-resisting carbide contacts at all gaging stations.

Special Gaging

Ultra-Light Honeycomb Deep Throat and Large Diameter Gages

A large diameter or deep-throated gage no longer has to be heavy and hard to handle. Starrett special gage engineers have studied the physical and structural properties of honeycomb aluminum, establishing standards covering the selection and use of this lightweight material.

The results were long-range measurement to close tolerances in hand-held gages of many configurations, all combining great rigidity with light weight and ease of handling.

It measures diameters to 72" (180cm) and throat depths to 24" (60cm).

Ultra-Light Deep Throat Gage

This deep throat indicating micrometer gage solves the problem of checking the .281" (±.005") thickness of a fan rotor shaft at a point nearly 15" from its edge.

Ultra-Light Large Diameter Gage

This gage is used as an indicating snap gage by setting the indicator to zero with the set master and then reading the part size variations on the indicator.

The setting master is a Starrett 234 End Measuring Rod with insulated grips and saddle-centering mounts.

Sizes are available from 18" to 24" through 84" to 90".

This gage can be made into an adjustable snap gage by fitting one end with a micrometer and the other end with an indicator. They are available with dial or electronic indicators.

Other concepts are available to suit specific requirements.

Special Gaging

Special Geometries

Thickness Gages

We have fulfilled many requests for special purpose gages to measure material thickness in hard to reach areas.

Wall thickness gages

Thickness gage with roller contacts

Quick-Adjusting Micrometer Head

We have developed a number of custom gages utilizing a Starrett 30380 Quick Adjusting Micrometer Head. It greatly increases the speed with which measurements can be taken.

Pressing a button on the thimble allows the spindle to slide along its axis to any position within its range. Releasing the button re-engages the spindle threads, and thimble rotation is then used for final size adjustment.

Gages with these micrometer heads can save a lot of time when taking precise measurements in hard to access areas

Dial Protractor Heads

Starrett Dial Protractor Heads for special applications permit rapid angular measurements. With 90º range and graduations of 5' they will assure accurate measurements.

Specifications – Bezel diameter is 2-1/4"; case thickness is 1.34" from crystal to back; .25" dia. input shaft projects .63" from back of case. Main dial reading to customer specification; graduation – specify 0º5', 0º10' or 0º15'. Also available with balanced dials and with counterclockwise figures in red.

Special Gaging

Universal Bench Gage

Sizes from 0 to 4" are rapidly checked to .0001" accuracy with a dial or electronic indicator. The gage range is ±.100" from the zero set point on a master. A rugged ball bushing motion transfer provides accuracy for many maintenance-free years.

With optional contacts, this gage can be quickly set up to check inside and outside diameters, slot and groove widths, length or thickness, and splines or gear pitch diameters.

Move the lockable slide to reverse this gaging direction. Attach the required contacts and set the indicator to zero with a master. You are ready to gage a different part in less than five minutes.

The gage is also available with a digital indicator that will hold the reading from one sweep over the part to eliminate errors.

Contacts are available for numerous applications. Optional 2- or 3-point contact sets are available with flat or rounded faces, conical points, steel or carbide balls, and pins for over-roll dimensions.

Data Collection

SPC requires accurate input of product dimensions. Speed and accuracy are the demands met by this special gage and the 776 Gage -Chek™.

One special gage and one 776 displays and stores up to eight dimensions. As shown, the larger diameter, small diameter, concentricity and length are checked in one step. It takes less than ten seconds to take and store all four dimensions.

The actual sizes are entered into the 776 display. Both the variance from nominal size plus actual size can be displayed.

Special Gaging

Inside Diameter Double-Turret Gages

This gage was designed to fit through a diameter much smaller than the one to be gaged. A double-turret gage can check an I.D. up to two times larger than the hole it will pass through. Single-turret gages can be designed for I.D.s up to one and one-half times larger than the hole it will pass through. Accurate gages have been supplied that will reach 36" deep.

Gage shown open for mastering or measuring.

Gage folded for insertion or removal.

Turrent gage shown open for inspecting parts.

Special Gaging

Variable Height Diameter Radius Gage

Diameters, radii and lengths (from known "bump stops") can be measured using this long gaging range, electronic indicator assembly.

It is capable of locking into position at specific heights and moved up or down as needed.

Gage (right) shown on top of master (below and left)

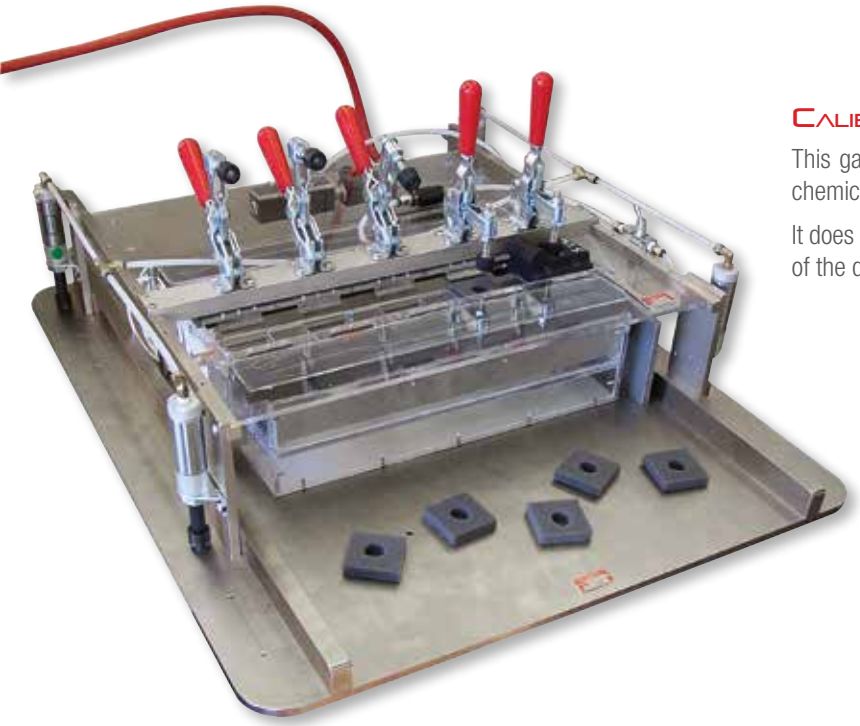

Calibration Gage with Pneumatic Adjustment

This gage is used to check the equipment that detects the level of a chemical in two tanks.

It does not do the actual measuring, but verifies the validity/compliance of the detectors.

Performance Racing

Stagger Pro 1000

The Stagger Pro 1000 utilizes electronic caliper technology to quickly and accurately record front and rear stagger for oval track car setup. The Stagger Pro is simple to use and eliminates potential errors that could result in costly setup mistakes. With simple button presses the Stagger Pro quickly measures each tire and calculates the front and rear stagger. Adjustable to accomodate a variety of tire sizes.

Ride Height Gage

Controlling the ride-height of a car is one of the most strict rules in racing. Starrett developed a custom-engineered Ride Height Gage that provides easier, more precise measurement before and after the race.

Cylinder Bore Gage

The design of the cylinder gage is to access the engine's piston cylinder cavity through the spark plug opening. The design allows a quick check of racing specifications of the cylinder cavity diameter, especially modifications beyond what's acceptable, without the need to dismantle the engine block for access.

SQUARES

Squares

Starrett squares are offered in a practical variety of styles to suit the needs of the individual, whether it be a toolmaker, mechanic, carpenter, or a "do-it-yourself" homeowner.

The Starrett name has always been associated with squares because our founder, Laroy Starrett, invented the combination square in 1877. The success of this tool led to the beginning of The L.S. Starrett Company in 1880. The combination square is one of the world's most practical and versatile tool inventions – the basic tool for every builder and craftsman.

Squares

In this section you will see combination squares, solid test or try squares, and special squares for tool and diemakers and carpenters.

To check squareness at the highest level of accuracy, we recommend our TS True Squares. These are available in three styles down to the amazing accuracy of 1/4 second. These are listed in the Gage Block Section of this catalog.

We also offer granite squares which are listed in the Granite Surface Plate Section of this catalog. The main purpose of these squares is for checking the X, Y, and Z axes on CNC machine tools and coordinate measuring machines.

Combination Squares Feature:

- A choice of smooth-finished forged and hardened (longer wearing) steel square head and center head, or a cast iron square head and center head. All bearing surfaces are accurately ground.
- A choice of stable cast iron protractors – reversible or non-reversible style – all nicely finished with a black, durable finish
- Protractors are furnished as reversible, with shoulders on both sides of the blade, or non-reversible, with a single shoulder on one side of the blade only. All protractors also have a spirit level.
- Protractor heads have revolving turrets with direct-reading double graduations, 0-180º in opposite directions. This permits the direct reading of angles and supplementary angles.
- Most square heads have a handy spirit level and a hardened scriber
- Square blades and protractor heads come in a choice of regular or Starrett no-glare satin chrome finish
- A reversible lock bolt allows the blade to be turned over or end-for-end without removing the lock bolt or nut. This ensures true alignment of the blade and heads.
- Square blades feature easy-to-read, sharp graduations and are available in many convenient styles
- Separate parts and attachments available

Tips for Using Squares and Center Heads

First, make sure your square is clean and that it is located against a flat surface – burrs on metal or knots and bumps on wood will throw squareness off.

Second, to scribe a line, the steel scriber can be used on any material, but usually on metal. A carpenter's pencil is normally used on wood, but if finer lines are needed, a light cut with a utility knife may be used. This is also handy when scribing cross grain.

Third, when using a center head on a piece that may not be completely round, it is good practice to scribe more than two intersecting lines.

Combination Squares

Starrett combination squares consist of a photo-engraved, hardened and tempered steel rule (or blade) on which is mounted on an adjustable square head.

Starrett Combination Square Heads are made of cast iron or forged and hardened steel and are not to be confused with the cheap imitation plastic or die cast heads on the market. The value of Starrett tools is that they are accurate and will last.

As the name indicates, these tools can be used for many different purposes – a complete substitute for a whole set of common solid try squares, a 45 degree miter, a depth gage, a height gage, a marking or scribing gage, a level, a plumb and, by withdrawing the blade, it can also be used as a precision rule. This saves littering the workbench with too many tools, each being necessary but may be used less. This results in the goal of all good craftsmen – better accuracy and greater efficiency.

The combination square with center head is a basic combination set. The center head is a convenient and accurate way to find the center of round work.

Complete combination sets feature the combination square with a center head and with either a reversible or non-reversible protractor. Details of the protractors are also included in the Protractor and Angle Measurements Section of this catalog.

Combination square

Combination square with head

Combination set

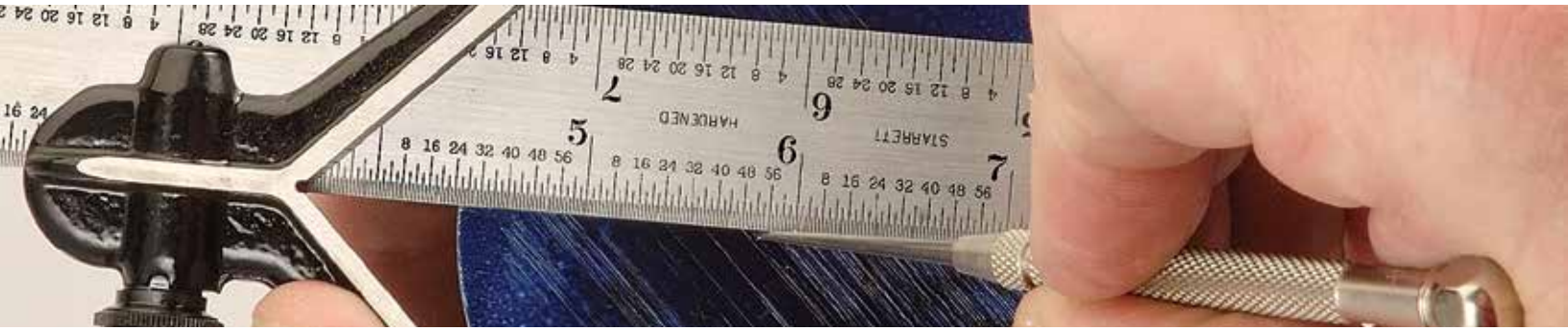

Combination Squares

11H Cast Iron Heads

With reversible lock bolt, scriber, spirit level (except 4"), and hardened steel, photo-engraved blade with regular or satin chrome finish. Cast iron head with black wrinkle finish.

C11H-12-4R

33H Forged and Hardened Steel Heads

These squares have the same features as the 11 cast iron heads except that the square heads are forged hardened steel with smooth, black enamel finish.

C33H-12-4R

4-24" Combination Squares with Square Head

11H Cast Iron Heads with Black Wrinkle Finish		33H Forged and Hardened Steel Heads with Smooth Black Enamel Finish				
Cat. No.	**EDP**	**Cat. No.**	**EDP**	**Size**	**Graduation**	**Blade**
11H-4-4R	50049	33H-4-4R	50203	4"	4R – 8ths, 16ths, Quick Reading 32nds, 64ths	Regular
C11H-4-4R	56360	C33H-4-4R	56390			Satin Chrome
11H-6-4R	50051	33H-6-4R	50205	6"	4R – 8ths, 16ths, Quick Reading 32nds, 64ths	Regular
C11H-6-4R	56362	C33H-6-4R	56392			Satin Chrome
11H-6-16R	50053	33H-6-16R	50207	6"	16R – Quick Reading 32nds, 64ths, Aircraft Quick Reading 50ths, 100ths	Regular
C11H-6-16R	56364	C33H-6-16R	56394			Satin Chrome
11H-12-4R	50055	33H-12-4R	50209	12"	4R – 8ths, 16ths, Quick Reading 32nds, 64ths	Regular
C11H-12-4R	56366	C33H-12-4R	56396	12"	4R – 8ths, 16ths, Quick Reading 32nds, 64ths	Satin Chrome
C11H-12-4RW/SLC*	66896	C33H-12-4RW/SLC*	66897			
11H-12-16R	50057	33H-12-16R	50211	12"	16R – Quick Reading 32nds, 64ths, Aircraft Quick Reading 50ths, 100ths	Regular
C11H-12-16R	56368	C33H-12-16R	56398			Satin Chrome
11H-18-4R	50059	33H-18-4R	50213	18"	4R – 8ths, 16ths, Quick Reading 32nds, 64ths	Regular
C11H-18-4R	56370	C33H-18-4R	56400			Satin Chrome
11H-18-16R	50061	33H-18-16R	50215	18"	16R – Quick Reading 32nds, 64ths, Aircraft Quick Reading 50ths, 100ths	Regular
C11H-18-16R	56372	C33H-18-16R	56402			Satin Chrome
11H-24-4R	50063	33H-24-4R	50217	24"	4R – 8ths, 16ths, Quick Reading 32nds, 64ths	Regular
C11H-24-4R	56374	C33H-24-4R	56404			Satin Chrome
11H-24-16R	50065	33H-24-16R	50219	24"	16R – Quick Reading 32nds, 64ths, Aircraft Quick Reading 50ths, 100ths	Regular
C11H-24-16R	56376	C33H-24-16R	56406			Satin Chrome

150-600mm Combination Squares with Square Head

11MH Cast Iron Heads with Black Wrinkle Finish		33MH Forged and Hardened Steel Heads with Smooth Black Enamel Finish				
Cat. No.	**EDP**	**Cat. No.**	**EDP**	**Size**	**Graduation**	**Blade**
11MH-150	56241	33MH-150	56247	150mm	mm and 1/2mm Both Sides	Regular
C11MH-150	56380	C33MH-150	56410			Satin Chrome
11MH-300	56243	33MH-300	56249	300mm	mm and 1/2mm Both Sides	Regular
C11MH-300	56382	C33MH-300	56412			Satin Chrome
11MH-600	56245	33MH-600	56251	600mm	mm and 1/2mm Both Sides	Regular
C11MH-600	56384	C33MH-600	56414			Satin Chrome

300-600mm and 11-3/4 – 23-1/2" Combination Squares with Square Head

11MEH Cast Iron Heads with Black Wrinkle Finish		33MEH Forged and Hardened Steel Heads with Smooth Black Enamel Finish				
Cat. No.	**EDP**	**Cat. No.**	**EDP**	**Size**	**Graduation**	**Blade**
11MEH-300	50067	33MEH-300	50221	300mm and 11-3/4"	1/2mm and 32nds One Side; mm and 64ths Reverse Side	Regular
C11MEH-300	56386	C33MEH-300	56416			Satin Chrome
11MEH-600	56121	33MEH-600	50237	600mm and 23-1/2"	1/2mm and 32nds One Side; mm and 64ths Reverse Side	Regular
C11MEH-600	56388	C33MEH-600	56418			Satin Chrome

* Includes redemption card for Standard Letter of Certification (SLC).

Combination Squares

Combination Squares with Center Heads

11HC Cast Iron Heads

With reversible lock bolts, scriber, spirit level (except 4"), and hardened steel, photo-engraved blade with regular or satin chrome finish. Cast iron heads with black wrinkle finish.

C11HC-12-4R

33HC Forged and Hardened Steel Heads

These squares have the same features as the 11HC cast iron heads except that the square heads and center heads are forged hardened steel with smooth, black enamel finish.

C33HC-12-4R

4-24" Combination Squares with Square and Center Heads

11HC Cast Iron Heads with Black Wrinkle Finish		33HC Forged and Hardened Steel Heads with Smooth Black Enamel Finish				
Cat. No.	**EDP**	**Cat. No.**	**EDP**	**Size**	**Graduation**	**Blade**
11HC-4-4R	50050	33HC-4-4R	50204	4"	4R – 8ths, 16ths, Quick Reading 32nds, 64ths	Regular
C11HC-4-4R	56361	C33HC-4-4R	56391			Satin Chrome
11HC-6-4R	50052	33HC-6-4R	50206	6"	4R – 8ths, 16ths, Quick Reading 32nds, 64ths	Regular
C11HC-6-4R	56363	C33HC-6-4R	56393			Satin Chrome
11HC-6-16R	50054	33HC-6-16R	50208	6"	16R – Quick Reading 32nds, 64ths, Aircraft Quick Reading 50ths, 100ths	Regular
C11HC-6-16R	56365	C33HC-6-16R	56395			Satin Chrome
11HC-12-4R	50056	33HC-12-4R	50210	12"	4R – 8ths, 16ths, Quick Reading 32nds, 64ths	Regular
C11HC-12-4R	56367	C33HC-12-4R	56397			Satin Chrome
11HC-12-16R	50058	33HC-12-16R	50212	12"	16R – Quick Reading 32nds, 64ths, Aircraft Quick Reading 50ths, 100ths	Regular
C11HC-12-16R	56369	C33HC-12-16R	56399			Satin Chrome
11HC-18-4R	50060	33HC-18-4R	50214	18"	4R – 8ths, 16ths, Quick Reading 32nds, 64ths	Regular
C11HC-18-4R	56371	C33HC-18-4R	56401			Satin Chrome
11HC-18-16R	50062	33HC-18-16R	50216	18"	16R – Quick Reading 32nds, 64ths, Aircraft Quick Reading 50ths, 100ths	Regular
C11HC-18-16R	56373	C33HC-18-16R	56403			Satin Chrome
11HC-24-4R	50064	33HC-24-4R	50218	24"	4R – 8ths, 16ths, Quick Reading 32nds, 64ths	Regular
C11HC-24-4R	56375	C33HC-24-4R	56405			Satin Chrome
11HC-24-16R	50066	33HC-24-16R	50220	24"	16R – Quick Reading 32nds, 64ths, Aircraft Quick Reading 50ths, 100ths	Regular
C11HC-24-16R	56377	C33HC-24-16R	56407			Satin Chrome

150-600mm Combination Squares with Square and Center Heads

11MHC Cast Iron Heads with Black Wrinkle Finish		33MHC Forged and Hardened Steel Heads with Smooth Black Enamel Finish				
Cat. No.	**EDP**	**Cat. No.**	**EDP**	**Size**	**Graduation**	**Blade**
11MHC-150	56242	33MHC-150	56248	150mm	mm and 1/2mm Both Sides	Regular
C11MHC-150	56381	C33MHC-150	56411			Satin Chrome
11MHC-300	56244	33MHC-300	56250	300mm	mm and 1/2mm Both Sides	Regular
C11MHC-300	56383	C33MHC-300	56413			Satin Chrome
11MHC-600	56246	33MHC-600	56252	600mm	mm and 1/2mm Both Sides	Regular
C11MHC-600	56385	C33MHC-600	56415			Satin Chrome

300-600mm and 11-3/4 – 23-1/2" Combination Squares with Square and Center Heads

11MEHC Cast Iron Heads with Black Wrinkle Finish		33MEHC Forged and Hardened Steel Heads with Smooth Black Enamel Finish				
Cat. No.	**EDP**	**Cat. No.**	**EDP**	**Size**	**Graduation**	**Blade**
11MEHC-300	50068	33MEHC-300	50222	300mm and 11-3/4"	1/2mm and 32nds One Side; mm and 64ths Reverse Side	Regular
C11MEHC-300	56387	C33MEHC-300	56417			Satin Chrome
11MEHC-600	50075	33MEHC-600	50238	600mm and 23-1/2"	1/2mm and 32nds One Side; mm and 64ths Reverse Side	Regular
C11MEHC-600	56389	C33MEHC-600	56419			Satin Chrome

Combination Sets

Combination Square wtih Center and reversible Protractor Heads

435 Square, Center and Protractor Head

CAST IRON

With reversible lock bolts, scriber, spirit level in both square head and protractor head, direct reading double 180º protractor scale, hardened steel, photo-engraved blade. Cast iron heads with black wrinkle finish. Also available with satin chrome blade and protractor head.

C435-12-4R

C434-12-4R

Supplied in protective case

434 Forged and Hardened Steel Square and Center Heads, Cast Iron Protractor Head

THE VERY BEST SETS AVAILABLE

These squares have the same features as the 435 except that the square heads and center heads are forged, hardened steel with smooth, black enamel finish.

12-24" Combination Sets with Square, Center and Reversible Protractor Head and Blade						
435 Sets Cast Iron Heads with Black Wrinkle Finish		**434 Sets Forged and Hardened Square and Center Heads, Cast Iron Protractor Head with Smooth Black Finish**				
Cat. No.	**EDP**	**Cat. No.**	**EDP**	**Size**	**Graduation**	**Blade**
435-12-4R	51556	434-12-4R	51542	12"	4R – 8ths, 16ths, Quick Reading 32nds, 64ths	Regular
C435-12-4R	66682	C434-12-4R	51548			Satin Chrome
		C434-12-4R W/SLC*	66898			
435-12-16R	51557	434-12-16R	51543	12"	16R – Quick Reading 32nds, 64ths, Aircraft Quick Reading 50ths, 100ths	Regular
		C434-12-16R	51549			Satin Chrome
435-18-4R**	51558	434-18-4R**	51544	18"	4R – 8ths, 16ths, Quick Reading 32nds, 64ths	Regular
		C434-18-4R**	51550			Satin Chrome
		434-18-16R**	51545	18"	16R – Quick Reading 32nds, 64ths, Aircraft Quick Reading 50ths, 100ths	Regular
		C434-18-16R**	51551			Satin Chrome
435-24-4R**	51559	434-24-4R**	51546	24"	4R – 8ths, 16ths, Quick Reading 32nds, 64ths	Regular
		C434-24-4R**	51552			Satin Chrome
		434-24-16R**	51547	24"	16R – Quick Reading 32nds, 64ths, Aircraft Quick Reading 50ths, 100ths	Regular
		C434-24-16R**	51553			Satin Chrome
300-600mm Combination Sets with Square, Center and Reversible Protractor Head and Blade						
435M Sets Cast Iron Heads with Black Wrinkle Finish		**434M Sets Forged and Hardened Square and Center Heads, Cast Iron Protractor Head with Smooth Black Finish**				
Cat. No.	**EDP**	**Cat. No.**	**EDP**	**Size**	**Graduation**	**Blade**
435M-300	66177	434M-300	56255	300mm	mm and 1/2mm Both Sides	Regular
C435M-300	61918	C434M-300	56420			Satin Chrome
435M-600**	66681	434M-600**	56256	600mm	mm and 1/2mm Both Sides	Regular
		C434M-600**	56421			Satin Chrome
300-600mm and 11-3/4 – 23-1/2" Combination Sets with Square, Center and Reversible Protractor Head and Blade						
435ME Sets Cast Iron Heads with Black Wrinkle Finish		**434ME Sets Forged and Hardened Square and Center Heads, Cast Iron Protractor Head with Smooth Black Finish**				
Cat. No.	**EDP**	**Cat. No.**	**EDP**	**Size**	**Graduation**	**Blade**
435ME-300	51560	434ME-300	51554	300mm and 11-3/4"	1/2mm and 32nds One Side; mm and 64ths Reverse Side	Regular
		C434ME-300	56422			Satin Chrome
435ME-600**	51561	434ME-600**	51555	600mm and 23-1/2"	1/2mm and 32nds One Side; mm and 64ths Reverse Side	Regular
		C434ME-600**	56423			Satin Chrome

* Includes redemption card for Standard Letter of Certification (SLC).
** Does not include case.

Combination Sets

Combination Square with Center and Non-Reversible Protractor Head

9 Combination Sets with Square, Center and Non-reversible Protractor Head

CAST IRON

With reversible lock bolts, scriber, spirit level in both square head and protractor head, direct reading double 180º protractor scale, and hardened steel, photo-engraved blade. Cast iron heads with black wrinkle finish. Also available with satin chrome blade and protractor head.

Supplied in protective case

9-12-4R

12-24" Combination Sets with Square, Center and Non-reversible Protractor Head and Blade				
Cast Iron Heads with Black Wrinkle Finish				
Cat. No.	EDP	Size	Graduation	Blade
9-12-4R	50042	12"	4R – 8ths, 16ths, Quick Reading 32nds, 64ths	Regular
C9-12-4R	50046			Satin Chrome
9-12-16R	50043	12"	16R – Quick Reading 32nds, 64ths, Air Craft Quick Reading 50ths, 100ths	Regular
9-18-4R	50044	18"	4R – 8ths, 16ths, Quick Reading 32nds, 64ths	Regular
9-24-4R	50045	24"	4R – 8ths, 16ths, Quick Reading 32nds, 64ths	Regular
300-600mm Combination Sets with Square, Center and Non-reversible Protractor Head and Blade				
Cast Iron Heads with Black Wrinkle Finish				
Cat. No.	EDP	Size	Graduation	Blade
9M-300	56253	300mm	mm and 1/2mm Both Sides	Regular
9M-600	56254	600mm	mm and 1/2mm Both Sides	Regular
300-600mm and 11-3/4 – 23-1/2" Combination Sets with Square, Center and Non-Reversible Protractor Head and Blade				
Cast Iron Heads with Black Wrinkle Finish				
Cat. No.	EDP	Size	Graduation	Blade
9ME-300	50047	300mm and 11-3/4"	1/2mm and 32nds One Side; mm and 64ths Reverse Side	Regular
9ME-600	50048	600mm and 23-1/2"	1/2mm and 32nds One Side; mm and 64ths Reverse Side	Regular

Combination Sets

Blades for Combination Squares, Sets and Bevel Protractors

INCH, MILLIMETER AND INCH/MILLIMETER

The blades listed below fit any head according to the sizes noted in the charts on all combination squares, combination sets and bevel protractors. The 12", 18", 24", 36" and 48" and 300mm and 600mm sizes are interchangeable. Exception: Starrett 33J and 8 Combination Squares. (For these, see 33J and 8 listings.)

Inch Blades Only for Combination Squares, Sets and Bevel Protractors					
Cat. No.	**EDP**	**Size**	**Approx. Width x Thickness**	**Graduation**	**Finish**
B4-4R CB4-4R	50076 50077	4"	5/8 x 1/16"	4R – 8ths, 16ths, Quick Reading 32nds, 64ths	Regular Satin Chrome
CB4-16R	50078	4"	5/8 x 1/16"	16R – Quick Reading 32nds, 64ths, Aircraft Quick Reading 50ths, 100ths	Satin Chrome
B6-4R CB6-4R	50079 50080	6"	3/4 x 5/64"	4R – 8ths, 16ths, Quick Reading 32nds, 64ths	Regular Satin Chrome
B6-16R CB6-16R	50081 50082	6"	3/4 x 5/64"	16R – Quick Reading 32nds, 64ths, Aircraft Quick Reading 50ths, 100ths	Regular Satin Chrome
B12-4R CB12-4R	50083 50084	12"	1 x 3/32"	4R – 8ths, 16ths, Quick Reading 32nds, 64ths	Regular Satin Chrome
CB12-6R	50085	12"	1 x 3/32"	6R – Aircraft Quick Reading 50ths and 10ths	Satin Chrome
B12-16R CB12-16R	50086 50087	12"	1 x 3/32"	16R – Quick Reading 32nds, 64ths, Aircraft Quick Reading 50ths, 100ths	Regular Satin Chrome
B18-4R CB18-4R	50088 50089	18"	1 x 3/32"	4R – 8ths, 16ths, Quick Reading 32nds, 64ths	Regular Satin Chrome
B18-16R CB18-16R	50090 50091	18"	1 x 3/32"	16R – Quick Reading 32nds, 64ths, Aircraft Quick Reading 50ths, 100ths	Regular Satin Chrome
B24-4R CB24-4R	50092 50093	24"	1 x 3/32"	4R – 8ths, 16ths, Quick Reading 32nds, 64ths	Regular Satin Chrome
CB24-6R	50094	24"	1 x 3/32"	6R – Aircraft Quick Reading 50ths and 10ths	Satin Chrome
B24-16R CB24-16R	50095 50096	24"	1 x 3/32"	16R – Quick Reading 32nds, 64ths, Aircraft Quick Reading 50ths, 100ths	Regular Satin Chrome
CB36-4R CB36-16R	50097 50098	36"	1 x 3/32"	4R – 8ths, 16ths, Quick Reading 32nds, 64ths 16R – Quick Reading 32nds, 64ths, Aircraft Quick Reading 50ths, 100ths	Satin Chrome Satin Chrome
CB48-4R	67102	48"	1 x 3/32"	4R – 8ths, 16ths, Quick Reading 32nds, 64ths	Satin Chrome
Millimeter Blades Only for Combination Squares, Sets and Bevel Protractors					
Cat. No.	**EDP**	**Size**	**Approx. Width x Thickness**	**Graduation**	**Finish**
B150-35 CB150-35	55985 55988	150mm	19 x 2mm	35 – mm and 1/2mm Both Sides	Regular Satin Chrome
B300-35 CB300-35	55986 55989	300mm	25 x 2.4mm	35 – mm and 1/2mm Both Sides	Regular Satin Chrome
B600-35 CB600-35	55987 55990	600mm	25 x 2.4mm	35 – mm and 1/2mm Both Sides	Regular Satin Chrome
Inch and Millimeter Blades Only for Combination Squares, Sets and Bevel Protractors					
Cat. No.	**EDP**	**Size**	**Approx. Width x Thickness**	**Graduation**	**Finish**
B150-36 CB150-36	55991 55992	150mm and 5-3/4"	19 x 2mm	36 – 1/2mm and 32nds One Side; mm and 64ths Reverse Side	Regular Satin Chrome
B300-36 CB300-36	50101 55993	300mm and 11-3/4"	25 x 2.4mm	36 – 1/2mm and 32nds One Side; mm and 64ths Reverse Side	Regular Satin Chrome
B600-36 CB600-36	50102 55994	600mm and 23-1/2"	25 x 2.4mm	36 – 1/2mm and 32nds One Side; mm and 64ths Reverse Side	Regular Satin Chrome

All sizes packed one per envelope.

CB12-4R

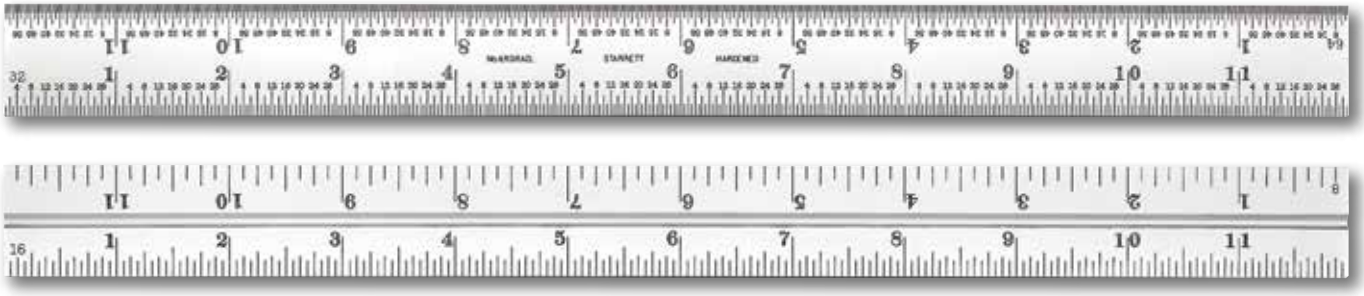

Combination Square Blades

Square Heads, Center Heads and Protractor Heads for Combination Squares, Combination Sets and Bevel Protractors

The heads listed fit any blade according to the sizes noted in the charts on all combination squares, combination sets and bevel protractors. Sizes 12", 18", 24", 36", and 48" and 300mm and 600mm are interchangeable. When ordering, specify complete catalog number and length of blade. Exception: Starrett 33J and 8 Combination Squares. (For these, see 33J and 8 listings.)

H11-1224

Square Heads Only for Combination Squares, Combination Sets and Bevel Protractors

Cast Iron Black Wrinkle Finish		Forged and Hardened Steel with Smooth Black Enamel Finish		
Cat. No.	EDP	Cat. No.	EDP	Fits Blade Size
H11-4	50069	H33-4	50223	4"
H11-6	50070	H33-6	50224	6"
H11-1224	50071	H33-1224	50225	12" (300mm) 18" 24" (600mm)

Center Heads Only for Combination Squares, Combination Sets and Bevel Protractors

Cast Iron Black Wrinkle Finish		Forged and Hardened Steel with Smooth Black Enamel Finish		
Cat. No.	EDP	Cat. No.	EDP	Fits Blade Size
C11-4	50072	C33-4	50226	4"
C11-6	50073	C33-6	50227	6"
C11-1224	50074	C33-1224	50228	12" (300mm) 18" 24" (600mm)

C33-1224

Protractor Heads – Cast Iron (Fits blades 12" and up) for Combination Squares, Combination Sets and Bevel Protractors

Reversible		Nonreversible		
Cat. No.	EDP	Cat. No.	EDP	Finish
PR-1224W	52525	PNR-1224W	50107	Black Wrinkle
CPR-1224W	64601	CPNR-1224W	50108	Black Wrinkle, Chrome on Turret
PR-1224S	52515			Black Smooth
CPR-1224S	52516			Black Smooth, Chrome on Turret

For prices of lock bolts, contact the Parts Department.
4" Center Head Max. Inspection Dia.: 3.125"
6" Center Head Max. Inspection Dia.: 4.3"
12"-24" Center Head Max. Inspection Dia.: 5.3"

PR-1224S

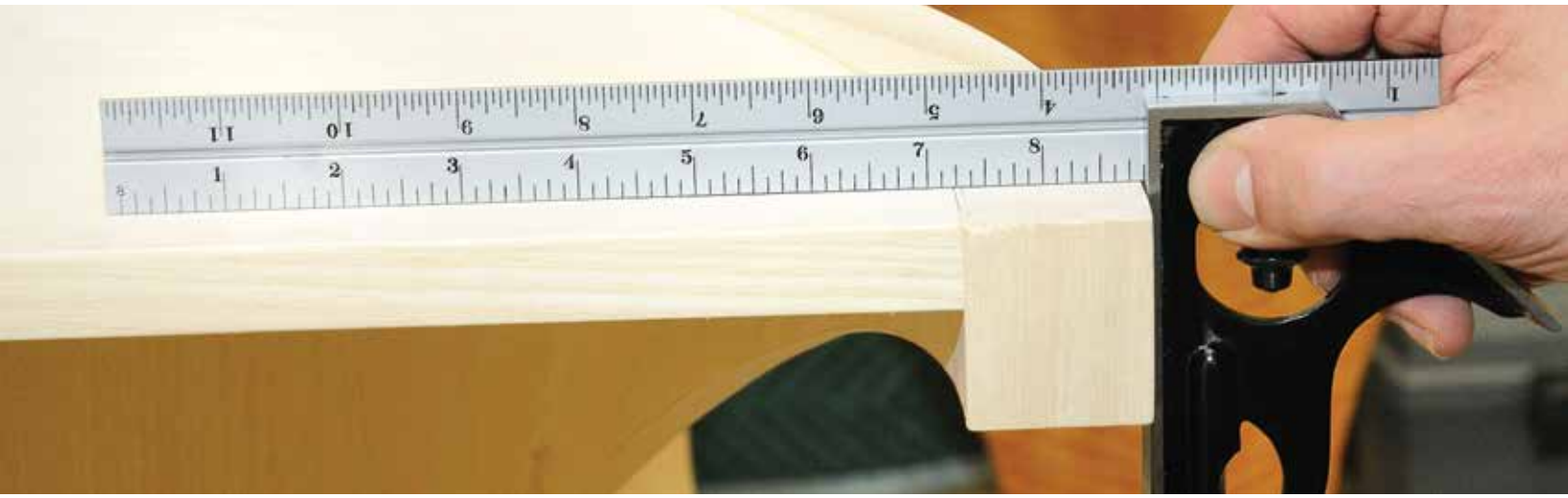

Combination Squares

289 Attachments for Combination Squares

These attachments fit combination square blades 1" (25mm) wide and permit attaching rules, blades or thin steel try squares, up to 1" (25mm) wide, at right angles to the blade of the square for laying out key seats, centers, scribing horizontal lines, and measuring diameters. Available in two sizes listed below. Both sizes can also be used with 289C Height and Depth Gage Attachment.

289 Attachments for Combination Squares

Cat. No.	EDP	Range Blade/Rule	Seat Length Blade	Rule
289A	51322	1" (25mm)	1-9/16" (40mm)	1-11/16" (43mm)
289B	51323		2-3/8" (60mm)	2-3/8" (60mm)

289C Height and Depth Gage Set for Combination Squares

When combined with the 289A or 289B Attachments, this set converts any combination square or set having blades up to 1" (25mm) wide into a height gage or depth gage. In addition to a clamp block, the set has a scriber, 6" rule (610N-6) and a 6" (150mm) rod, any one of which may be inserted in the clamp and locked in position. By applying the scriber, a practical height gage results. Use of the rule converts the tool to a depth gage for measuring in 64ths of an inch. With the rod used as a depth gage, small recesses and holes can also be checked.

289C Height and Depth Gage Set for Combination Squares

Cat. No.	EDP	Description
289C	51324	Clamp Block with Scriber, Rule and Rod

289A

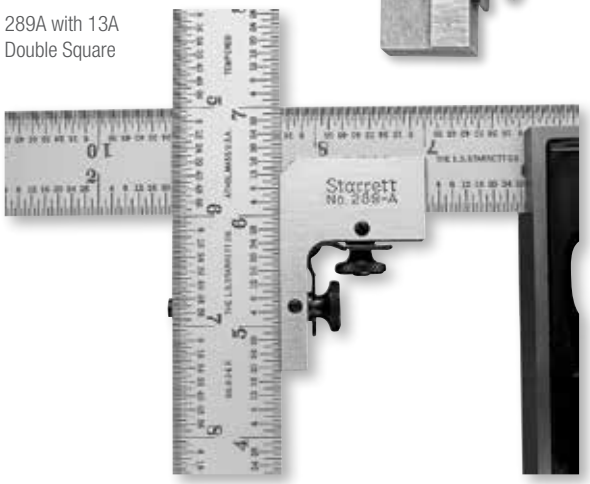

289A with 13A Double Square

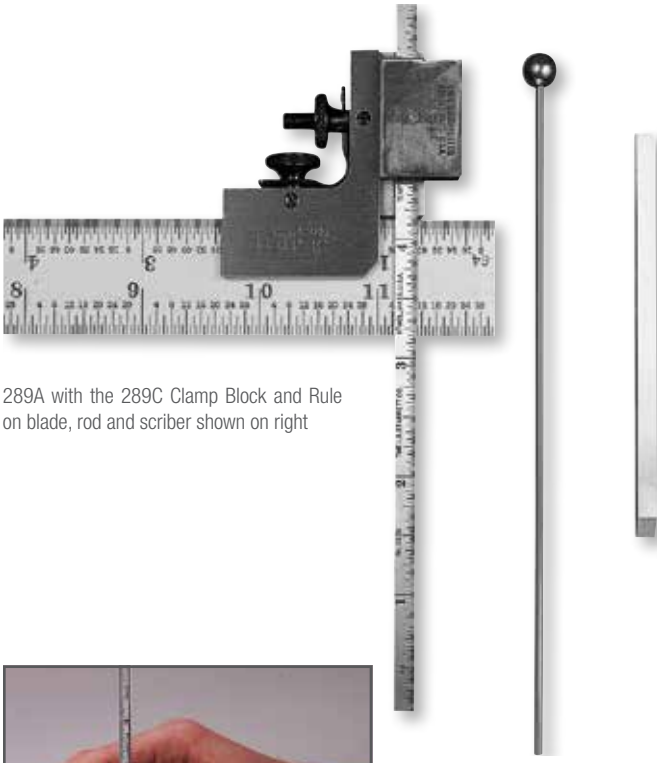

289A with the 289C Clamp Block and Rule on blade, rod and scriber shown on right

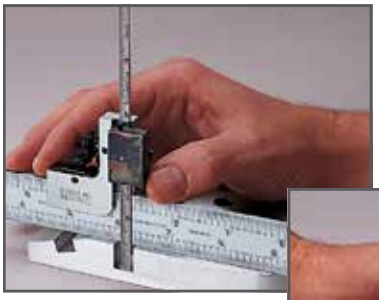

Measuring depth

Measuring height

Combination Squares

8 Large Combination Squares

24"

Extra large, heavy-duty construction throughout. The square head is 8-3/8" long and the center head has 4-1/4" arms. Furnished with 24" blade, 1-1/2" wide x 1/10" thick, with distinctive, photo-engraved graduations. Heads are cast iron and have black wrinkle finish.

- Reversible lock bolts
- Accurate spirit level
- Hardened steel blade

8 Large Combination Squares			
Cat. No.	**EDP**	**Graduation**	**Description**
8H	50037	4 – 8ths, 6ths, 32nds, 64ths	With Square Head Only
8HC	50038		With Square Head and Center Head
Blade Only for 8 Large Combination Squares			
Cat. No.	**EDP**	**Graduation**	**Description**
B824-4	50041	4 – 8ths, 16ths, 32nds, 64ths	24" Blade
Heads Only for 8 Large Combination Squares			
Cat. No.	**EDP**	**Description**	
H8	50039	Square Head	
C8	50040	Center Head*	

* Max. Inspect Diameter: 7.5"

8HC

10 Student Combination Squares

These tools were designed to train and develop apprentices to lay out and check their work more efficiently. The combination square is far superior to clumsy, old-style solid workshop-grade squares that are still being used in some vocational schools and apprenticeship programs around the world. The student's advantages are:

- Rugged, cast iron square head will outlast cheap plastic and die-cast imitations
- Accurate, hardened and tempered square blade offered in inch, millimeter, and inch and millimeter combined
- Reversible lock bolt allows the blade to be turned over or end-for-end so that all four graduated edges may be used
- The combination square, as its name indicates, handles many jobs, saving the apprentice from buying more individual tools. This combination square can be used as a try square, 45º miter, a depth gage, a height gage, a layout tool, and as a rule.
- Optional center head is available to increase the versatility of this universal measuring tool

Inch			
Cat. No.	**EDP**	**Size**	**Graduation**
10H-6-4R	64942	6"	4R – 8ths, 16ths, Quick Reading 32nds, 64ths
Millimeter			
Cat. No.	**EDP**	**Size**	**Graduation**
10MH-150	64943	150mm	mm and 1/2mm Both Sides
Inch and Millimeter			
Cat. No.	**EDP**	**Size**	**Graduation**
10MEH-150	64944	5-3/4" (150mm)	1/2mm and 32nds One Side mm and 64ths Reverse Side
Center Head Only			
Cat. No.	**EDP**	**Description**	
C11-6	50073	Center Head to Fit 10 Squares	

* Max. Inspect Diameter: 4.3"

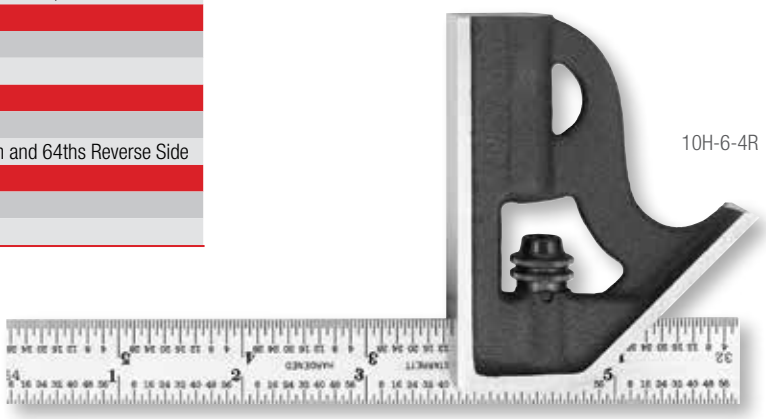

10H-6-4R

Combination Squares

33J Junior Combination Squares

6"

These squares are used by mechanics, toolmakers and patternmakers because of their compact, small size and light weight. Both blade and heads are smaller than on regular squares. Heads are drop forged, hardened steel and have smooth, black enamel finish. Blades 4" long may be ordered individually as listed below. Blades are furnished in regular finish, except where indicated.

33HC-6-4R

33J Junior Combination Squares				
Cat. No.	**EDP**	**Blade Length**	**Graduation**	**Description**
33JH-6-4R 33JH-6-16R	50229 50231	6"	4R – 8ths, 16ths, Quick Reading 32nds, 64ths 16R – Quick Reading 32nds, 64ths, Aircraft Quick Reading 50ths, 100ths	With Square Head Only
33JHC-6-4R 33JHC-6-16R	50230 50232	6"	4R – 8ths, 16ths, Quick Reading 32nds, 64ths 16R – Quick Reading 32nds, 64ths, Aircraft Quick Reading 50ths, 100ths	With Square Head and Center Head
Blades Only				
Cat. No.	**EDP**	**Blade Length**	**Graduation**	**Description**
B33J-4R CB33J-4R*	50235 67100	6"	4R – 8ths, 16ths, Quick Reading 32nds, 64ths	Blade
B33J-16R CB33J-16R*	50236 67101	6"	16R – Quick Reading 32nds, 64ths, Aircraft Quick Reading 50ths, 100ths	Blade
B4-4R CB4-4R*	50076 50077	4"	4R – 8ths, 16ths, Quick Reading 32nds, 64ths	Blade
CB4-16R*	50078	4"	16R – Quick Reading 32nds, 64ths, Aircraft Quick Reading 50ths, 100ths	Blade
Heads Only				
Cat. No.	**EDP**	**Description**		
H33-4	50223	Square Head		
C33-4	50226	Center Head**		

* Blade in satin chrome finish.
** Max. Inspect Diameter - 3.125"

439 Builders' Combination Tool

18" AND 24"

This versatile tool is invaluable for carpenters, builders, patternmakers, cabinet makers and all mechanics.

Features

- Combines seven tool functions in one compact, practical unit. It is a rule, square, level, plumb, protractor, bevel and pitch-to-foot indicator.
- It consists of a stock, 9" (230mm) long, a hardened, photo-engraved 1-1/2" (38mm) wide blade in 18" or 24" lengths, and a protractor
- On one side the protractor is graduated from zero to 90° in both directions show the direct and supplementary angles. The other side is graduated in 1/2" pitch increments from 0-12" per foot pitch.
- The stock has four levels which permits leveling or plumbing the work in relation to any to any angle or pitch
- Tool is ideal for laying out or cutting valleys or hips of different pitches, done as follows: Rotate the blade to the desired pitch, place the face of the stock against the work and draw a line. Then place the square end o fthe stock against the line and draw the complementary line. This gives the complementary angle automatically, without calculation.

439-18

Cat. No.	EDP	Blade Length	Blade Graduation	Head Graduation Degrees	Head Graduation Pitch
439-18 439-24	52110 52111	18" 24"	4R - 8ths, 16ths, 32nds, 64ths	0-90°	0-12" per ft.

Master Precision Squares

20-3

20 Master Precision Squares

1-1/2-36"/40-910MM

The finest precision-checking squares – not graduated. Squareness accuracy to .0001" (0.0025mm) every 6" (150mm).

These hardened steel squares are used when extreme accuracy is required. The beams and blades are hardened, ground and lapped to ensure parallelism and straightness. The beam is grooved at the inner corner for clearance of burr or dirt. Made of high quality tool steel, with the finest of craftsmanship throughout.

20 Master Precision Squares							
Squares Only		Case Only		Size – Length of Blade*		Length of Beam	
Cat. No.	EDP	Cat. No.	EDP	in	mm	in	mm
20-1 1/2	50128	916	55152	1-1/2	40	1-1/2	40
20-3	50130	951	55153	3	75	2-3/8	60
20-4 1/2	50132	918	55154	4-1/2	115	3 -1/2	90
20-6 20-6 W/SLC‡	50134 66899	919	55155	6	150	4-5/16	110
20-12 20-12 W/SLC‡	50136 66900	20ZZ-12	55156	12	300	7	180
20-24	50140	20ZZ-24†	55158	24	600	12-5/16	310
20-36**	50142	20ZZ-36†	55159	36	910	20	500

Larger squares can be furnished; quoted on application.
* Length of blade from the inner edge of the beam to the end of the blade.
** 36" (910mm) and larger size squares have special screws to secure the blade to the beam.
† Rack-type case.
‡ Includes redemption card for Standard Letter of Certification (SLC).

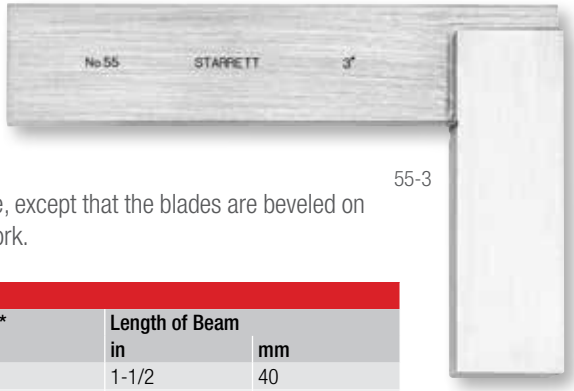

55-3

55 Master Precision Squares with Beveled Edges

1-1/2-6"/40-150MM

These 55 Hardened Steel Squares are the same as the 20 Squares described above, except that the blades are beveled on both edges of each side, which provides an excellent visual line contact with the work.

55 Master Precision Squares with Beveled Edges							
Squares Only		Case Only		Size – Length of Blade*		Length of Beam	
Cat. No.	EDP	Cat. No.	EDP	in	mm	in	mm
55-1 1/2	50277	916	55152	1-1/2	40	1-1/2	40
55-3	50279	951	55153	3	75	2-3/8	60
55-4 1/2	50281	918	55154	4-1/2	115	3-1/2	90
55-6	50283	919	55155	6	150	4-5/16	110

* Length of blade from the inner edge of the beam to the end of the blade.

Squares

3020 Toolmakers' Grade Stainless Steel Squares

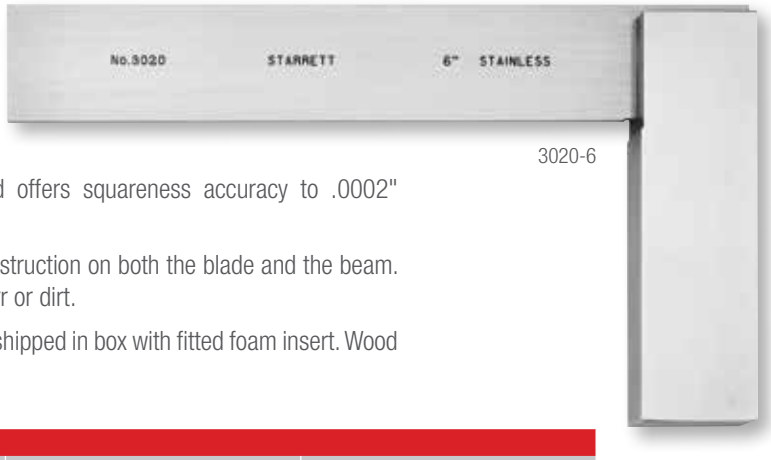

3020-6

2-31/32 - 12-1/32"/50-175MM

This high quality toolmakers' square is not graduated and offers squareness accuracy to .0002" (0.005mm) for every 6" (150mm).

They feature hardened, ground and lapped stainless steel construction on both the blade and the beam. The beam is machined at the inner corner for clearance of burr or dirt.

Packed one in a plastic case. 12" square and set of 4 squares shipped in box with fitted foam insert. Wood cases as listed may be purchased separately.

3020 Toolmakers' Grade Stainless Steel Squares							
Squares Only		Case Only		Size – Length of Blade*		Length of Beam	
Cat. No.	EDP	Cat. No.	EDP	in	mm	in	mm
3020-3	12225	951	55153	2-31/32	75	1-31/32	50
3020-4	12226	918	55154	3-31/32	100	2-31/32	75
3020-6	12227	919	55155	5-29/32	150	3-29/32	100
3020-12	12228	20ZZ-12	55156	12-1/32	300	6-7/8	175
3020 Sets							
Cat. No.	EDP	Description					
S3020Z	12229	Complete Set of all 4 Squares					

* Length of blade from the inner edge of the beam to the end of the blade.

61 "Reliable" Try Square

61

6"/150MM

A very useful try square – attractively designed, light and convenient. The blade is hardened, not graduated, and is firmly held by a special bolt and nut permitting the tool to be readily taken apart, if desired, for regrinding the blade and stock.

61 "Reliable" Try Square			
Cat. No.	EDP	Size – Length of Blade	Length of Beam
61	50303	6" (150mm)	3-1/2" (90mm)

Double Squares

13, 13M Double Squares with Hardened Blades

4-6"/100-150MM

These squares are very popular with machinists, toolmakers, and patternmakers. The sliding blades are adjustable making it practical for a wide variety of uses. The faces of the head are ground square, and the 6" (150mm) size has a level.

The bevel blade is available, featuring an octagon angle 45º at one end and a hexagon angle 60º at the other end, clearly marked.

A drill grinding blade, also available for 6" (150mm) squares, is beveled to 59º for drill grinding on one end and 41º (the cutting angle of countersinks for machine screws) at the other. Both ends have quick-reading 64ths grads. and the graduation is located to measure perpendicularly to the axis of the drill. By reading the graduations, the center point can be easily and accurately located.

The 6" square head used with the drill grinding blade is approximately 3-1/2" (90mm) long, and the faces approximately 9/16" (14mm) wide.

Inch Reading Double Squares – 4R Graduation – 8ths, 16ths, 32nds, 64ths			
Cat. No.	**EDP**	**Size**	**Description**
13A	50109	4"	With graduated blade only
13C	50111	6"	With graduated blade only
13E	50112		With graduated and bevel blades
13D	50114		Drill grinding blade only for 6" (150mm) squares
Millimeter Reading Double Squares – mm Both Edges One Side; mm and 1/2mm Reverse Side			
Cat. No.	**EDP**	**Size**	**Description**
13MA	56278	100mm	With graduated blade only
13MB	56279		With graduated and bevel blades
13MC	56280	150mm	With graduated blade only
13ME	56263		With graduated and bevel blades

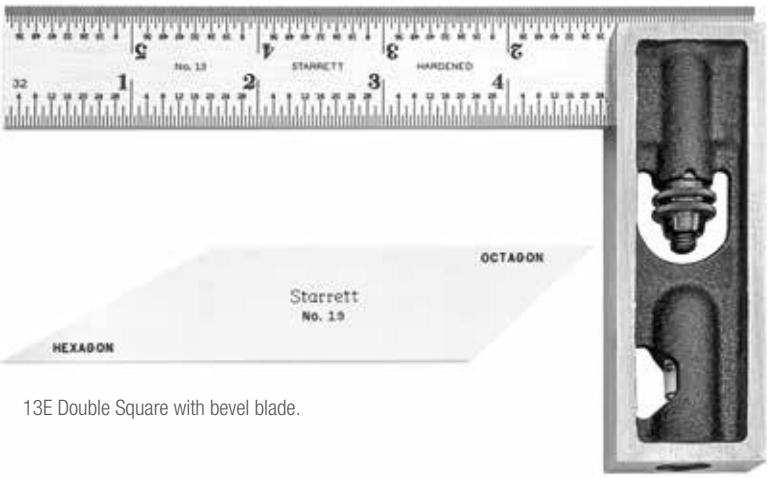

13E Double Square with bevel blade.

Double Squares

14, 14M Double Steel Squares with Hardened and Ground Head and Blades

2-1/2"/50MM

Designed for tool and diemakers, these fine precision double steel squares have adjustable blades, ideal for tight fits. A knurled clamping nut accurately locks the blades in any position.

Beveled blade is 45º on one end and 30º on the other.

2-1/4" (58mm) Narrow blade has 32nds and 64ths graduations. It is 5/32" (4mm) wide over a length of approximately 1-5/8" (41mm) and cut away at one end to a width of 3/32" (2.4mm).

14 Inch Reading Double Steel Squares – 32nds, 64ths				
Cat. No.	**EDP**	**Size**	**Graduation**	**Description**
14A	50117	2-1/2"	32nds, 64ths	With Graduated Blade Only
14D	50118			Complete with Graduated Narrow Blade and Bevel Blade
14M Millimeter Reading Double Steel Squares– mm Both Edges One Side; mm and 1/2mm Reverse Side				
Cat. No.	**EDP**	**Size**	**Graduation**	**Description**
14MA	56260	50mm	mm, 1/2mm	With Graduated Blade Only
14MD	56261			Complete with Graduated Narrow Blade and Bevel Blade

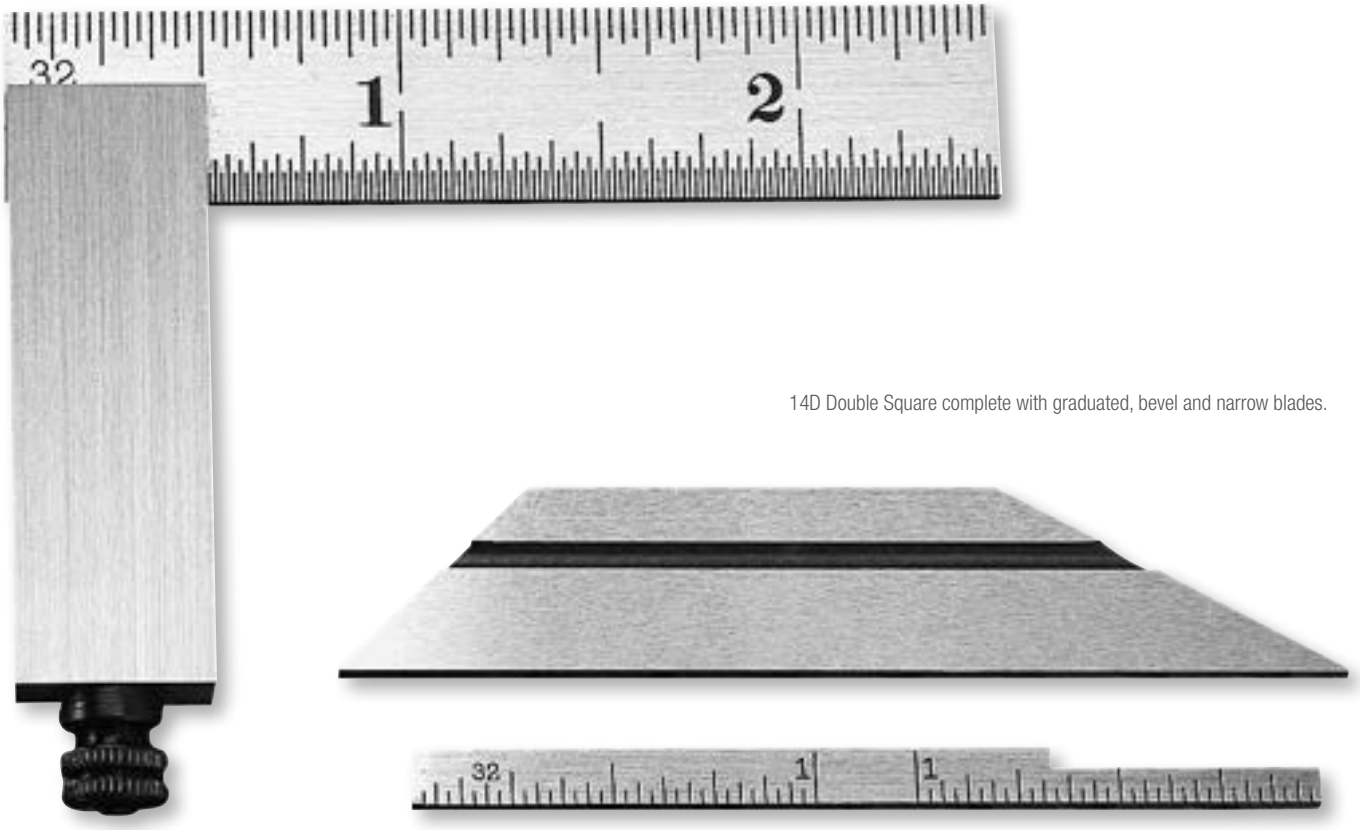

14D Double Square complete with graduated, bevel and narrow blades.

Diemakers' Squares

453, 453M Diemakers' Squares with Angular and Sliding Blade Adjustment

2-1/2"/50MM

The sliding blades of this tool and diemakers' square can be adjusted at an angle (up to approximately 10º) with the beam for measuring the clearance in dies (see sectional view). The larger knurled thumb screw locks the blades at any position, and the smaller one tilts the blades at an angle. To set the blades at an angle, first release the blade clamp screw, then the blade may be tilted to the desired angle by turning the small knurled screw into the beam. The blade can be held in position by tightening the clamping screw. Head and blades are hardened and ground.

The inch reading blade is graduated on one side, upper edge in 32nds, lower edge in 64ths and the millimeter reading blade is graduated in millimeters and 1/2 millimeters.

The bevel blade is approximately 2-1/2" (63mm) long x 1/2" (12.5mm) wide and is beveled to 30º on one end and 45º on the other.

The narrow graduated blade has 32nds graduation on one side, and 64ths on the other. It is 5/32" (4mm) wide over a length of approximately 1-5/8" (41mm) and cut away at one end to a width of 3/32" (2.4mm).

The offset blade is used where it would be impossible to sight a straight blade. It protrudes from the square about 1-1/2" (38mm) and is 1/8" (3mm) wide. Both sides of each edge are beveled to provide good visual line contact.

453 Inch Reading Diemakers' Squares – Graduation 32nds, 64ths			
Cat. No.	**EDP**	**Size**	**Description**
453A	52345	2-1/2"	With Standard Graduated Blade
453C	52347		With Standard, Narrow Blades
453E	52349		Complete With Standard, Bevel, Narrow and Offset Blades
453EZ	52351		Complete With Standard, Bevel, Narrow and Offset Blades in Case
453M Millimeter Reading Diemakers' Squares – Graduation mm and 1/2mm			
Cat. No.	**EDP**	**Size**	**Description**
453MA	52346	50mm	With Standard Graduated Blade
453MC	52348		With Metric Standard, Narrow Blades

Sectional View

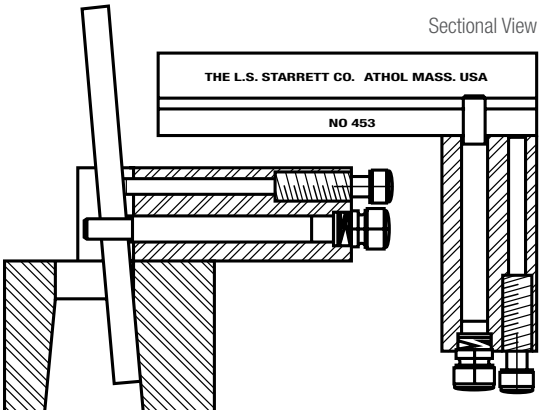

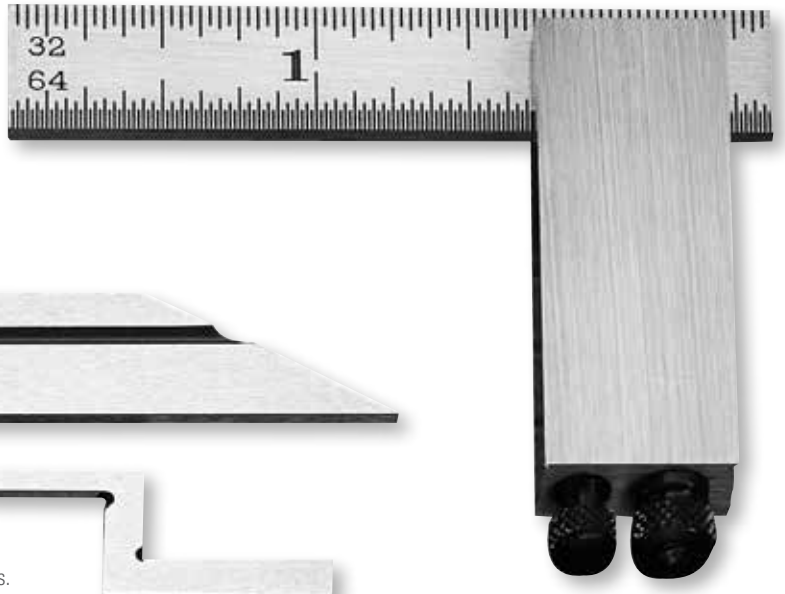

453E complete with standard, bevel, offset and narrow graduation blades.

Diemakers' Squares

457 Improved Diemakers' Square with Angular Adjustment

10º-0º-10º

The 457 Improved Diemakers' Square is a highly useful tool for tool and diemakers, especially for measuring die clearances. It is also very handy for patternmakers to check angles and drafts on patterns.

The beam of this square is graduated to show the setting in degrees of the blades. Blades can be set for any angle up to 10°, either side of 0º and the angle is indicated by the line on the pointer.

The graduated blade has 32nds of an inch on one side, and 64ths on the other. It is 5/32" (4mm) wide over a length of approximately 1-5/8" (41mm) and cut away at one end to a width of 3/32" (2.4mm).

The offset blade, which is used where it would be impossible to insert the straight blade, protrudes from the square about 1-1/2" (38mm). It is 1/8" (3mm) wide and both sides of each edge are beveled to give visual line contact.

The beam is beveled adjacent to the blade so that the blade is readily visible when checking in holes, slots, etc. Blades and beams are hardened and ground.

Angular Range 10º-0º-10º		
Cat. No.	**EDP**	**Description**
457A	52428	With Straight Blade Only
457C	52429	Complete, with Straight and Offset Blades

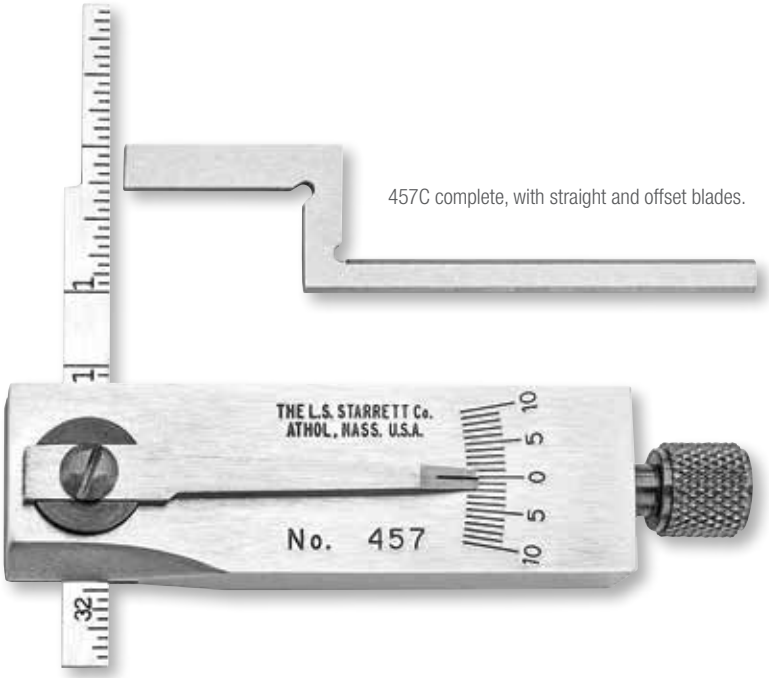

457C complete, with straight and offset blades.

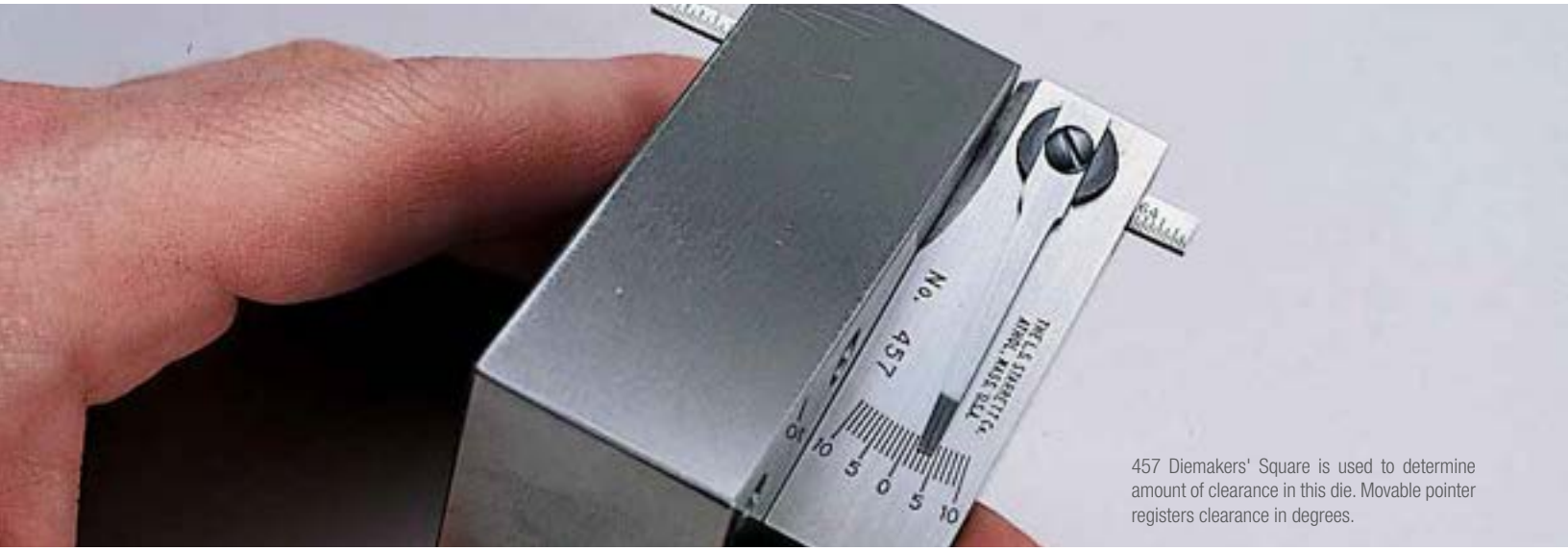

457 Diemakers' Square is used to determine amount of clearance in this die. Movable pointer registers clearance in degrees.

PRECISION RULES, STRAIGHT EDGES, PARALLELS

Precision Rules

Precision Steel Rules

Starrett rules are made from fine quality steel and produced to the highest precision standards, making them the most accurate and readable precision steel rules available. Through over 130 years of experience, we have developed the following versatile features, designs and styles:

Our product line consists of:

- Full-flexible 1/64"-1/50" (0.4-0.5mm) thick
- Semi-flexible 1/50-1/40" (0.5-0.6mm) thick
- Spring-tempered 3/64" (1.2mm) thick
- Heavy spring-tempered 1/10" (2.5mm) thick
- Stainless steel 1/64" or 3/64" (0.4 or 1.2mm) thick
- Graduation styles are inch, millimeter, inch and millimeter, shrink, and special graduations
- All rules are photo-engraved and tempered for long life and flexibility

Rule with Aircraft Quick-Reading Graduations on lower edge

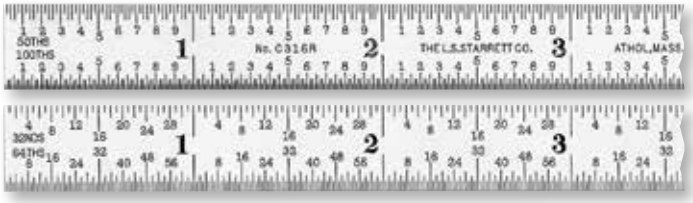

Rule with Quick-Reading Graduations on both edges

Accuracy

- All of our precision steel rules are photo-engraved
- We inspect to Starrett Master Standards, which are traceable to the National Institute of Standards and Technology
- Measuring Tip: When using a precision rule for very close accuracy, the eye can read better by measuring between two lines rather than from the end of the rule to a line

Readability Features

- The numbering size and style is distinctive and more readable than ordinary rules
- Advanced, staggered graduations- When reading lines, it is much easier to count lines of differing lengths than those that resemble a comb. All Starrett graduations are staggered in a height pattern that makes reading easy. For reading very fine graduations such as 50ths (.020") or 100ths (.010") of an inch, Starrett designed an improved pattern of lines called "Aircraft Quick-Reading Graduations" (see photo). The name stems from its extreme popularity in aircraft plants and other shops using decimals. This pattern is also used on some of our millimeter rules.
- Quick-reading figures are furnished with finer graduations for easier counting. Most all inch graduations of 1/32" and finer have subdivisions numbered (see photo).
- All rules are available in Starrett no-glare satin chrome finish for easier reading and rust resistance
- There are still some old "D" style rules on the market. These have one square and one rounded end. All Starrett rules are ground square on both ends. This provides better efficiency through the ability to read from either end on all edges.

Precision Rules

Useful Variation Features of Our Standard Precision Rules

End Graduations

End graduations are useful for measuring depths, widths of shoulders, recesses, grooves, etc. They are graduated in 32nds of an inch or millimeters on both ends of one side as shown at the right.

End Graduations

Adjustable Steel Hook Rules

These improved Hook Rules feature an adjustable double hook that can be shortened or extended on either side in relation to any one of the four graduations on the rule. This allows accurate measurements from shallow or deep shoulders and also permits setting inside calipers to any of the graduations. Hooks are hardened and may be adjusted or removed by a slight turn of an eccentric stud.

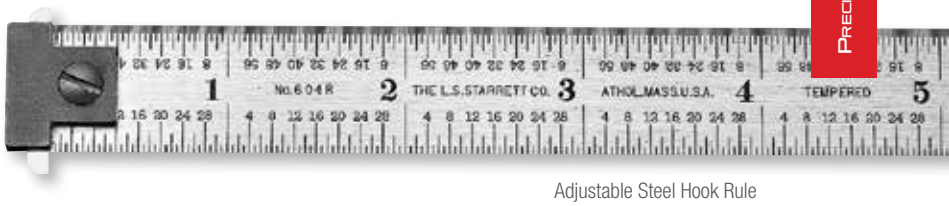

Adjustable Steel Hook Rule

Steel Hook Rules with Reversible Hook

These convenient Hook Rules permit accurate measurements, even when the user cannot see if the rule is aligned with the measuring edge. This is especially useful for measuring from round corners, through hubs, for setting inside calipers, etc. The single hook is hardened and may be reversed or removed by a slight turn of an eccentric stud.

Steel Hook Rule with Reversible Hook

Narrow Hook Rules with Reversible Hook

These useful Hook Rules are similar to the Hook Rules described above, but have a narrow blade (only 3/16" [4.8mm] wide) which permits measurements through holes as small as 7/32" (5.5mm) in diameter. Hooks are hardened and may be reversed or removed by a partial turn of the eccentric stud.

Narrow Hook Rule with Reversible Hook

Steel Rule with Tapered End

This 6" rule, our C310T-6, is a favorite with all mechanics because the tapered end permits measuring insides of small holes, narrow slots, grooves, recesses, etc. The rule has a taper from 1/2" width at the 2" graduation to 1/8" width at the end. Accurate, distinctive, photo-engraved graduations in 32nds are on one side and 64ths on the reverse side, with graduations always in a normal, easy-to-read position. Made of tempered, full-flexible steel with satin chrome finish.

Steel Rule with Tapered End

Steel Rule with Pocket Clip

This handy 6" rule is designed for frequent use. It is made of tempered, full-flexible steel and has accurate, photo-engraved graduations in 32nds on one edge and 64ths on the opposite edge, with satin chrome finish. C310K-6.

Steel Rule with Pocket Clip

Precision Rules

Inch Graduation Styles

1

First Edge: 10ths, 20ths, 50ths, 100ths

Second Edge: 12ths, 24ths, 48ths

Fourth Edge: 14ths, 28ths

Third Edge: 16ths, 32nds, 64ths

3R*

First Edge: 32nds

Second Edge: 64ths

Fourth Edge: 10ths

Third Edge: 50ths

4R*

First Edge: 64ths

Second Edge: 32nds

Fourth Edge: 8ths

Third Edge: 16ths

5R*

First Edge: 10ths

Second Edge: 100ths

Fourth Edge: 32nds

Third Edge: 64ths

6R*

First Edge: 50ths

Second Edge: 50ths

Fourth Edge: 10ths

Third Edge: 10ths

* Suffix "R" designates Quick-Reading graduations

NOTE: All rules under 1" in width have single row of inch figures. Rules 1" and wider have double row of inch figures, and each edge represents the bottom edge reading left to right.

Precision Rules

Inch Graduation Styles

7R*

First Edge: 100ths

Second Edge: 64ths

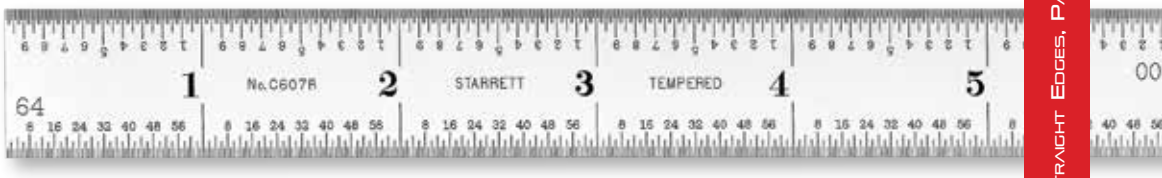

Fourth Edge: 32nds

Third Edge: 16ths

9R*

First Edge: None

Second Edge: 64ths

Fourth Edge: 16ths

Third Edge: 32nds

10R*

First Edge: 64ths

Second Edge: 32nds

NO.11

First Edge: None
Second Edge: 100ths

Third Edge: None
Fourth Edge: 64ths

16R*

First Edge: 50ths

Second Edge: 100ths

Fourth Edge: 32nds

Third Edge: 64ths

* Suffix "R" designates Quick-Reading graduations

NOTE: All rules under 1" in width have single row of inch figures. Rules 1" and wider have double row of inch figures, and each edge represents the bottom edge reading left to right.

Steel Rules

Steel Rules with Inch Graduations

1-144"

All rules furnished with Starrett satin chrome finish, except where noted. Additional sizes and variations available by special order.

Rules include

- Full-Flexible
- Semi-Flexible
- Spring-Tempered
- Heavy Spring-Tempered

Key to Starrett Rule Numbering System	
Prefixes	
C	Satin Chrome Finish
DH	Double Hook
H	Single Hook
Suffixes	
E	End Graduations
K	With Pocket Clip
N	Narrow-Type Rule
R	Quick-Reading
S	Semi-Flexible
T	Tapered End

1-4" Spring-Tempered Steel Rules with Inch Graduations					
Cat. No.	EDP	Length	Width x Thickness	Graduations	Feature Remarks
C604R-1*	56464	1"	1/2 x 3/64"	4R – 8ths, 16ths, Quick-Reading 32nds, 64ths	
C604R-2*	56465	2"			
C604R-3*	56466	3"	9/16 x 3/64"	4R – 8ths, 16ths, Quick-Reading 32nds, 64ths	
C604R-4*	56467	4"	5/8 x 3/64"	4R – 8ths, 16ths, Quick-Reading 32nds, 64ths	
6" Full-Flexible Steel Rules with Inch Graduations					
Cat. No.	EDP	Length	Width x Thickness	Graduations	Feature Remarks
C303R-6*	51334	6"	1/2 x 1/64"	3R – Quick-Reading 10ths, Aircraft Quick-Reading 50ths, 32nds and 64ths	
C304R-6*	66008	6"	1/2 x 1/64"	4R – 8ths, 16ths, Quick-Reading 32nds and 64ths	
C305R-6*	51347	6"	1/2 x 1/64"	5R – Quick-Reading 10ths, Aircraft Quick-Reading 100ths, 32nds and 64ths	
C305R-6 W/SLC*	66880				With Standard Letter of Certification†
C306R-6*	51352	6"	1/2 x 1/64"	6R – One Side Only – Quick-Reading 10ths (.10) Top Edge; Aircraft Quick-Reading 50ths (.02) Bottom Edge	
C309R-6*	51357	6"	1/2 x 1/64"	9R – 16ths and Quick-Reading 32nds on One Side; Quick-Reading 64ths on Reverse Side	
C310R-6*	51368	6"	1/2 x 1/64"	10R – Quick-Reading 32nds, 64ths on One Side Only	
C310K-6*	56701	6"	1/2 x 1/64"	10 – 32nds and 64ths on One Side Only	With Pocket Clip
C310T-6*	56700	6"	1/2 x 1/64"	10 – 32nds One Side; 64ths on Reverse Side	With Tapered End
C316R-6*	51374	6"	1/2 x 1/64"	16R – Quick-Reading 32nds, 64ths, Aircraft Quick-Reading 50ths and 100ths	
1309R-6*	53204	6"	1/2 x 1/64"	9R – 16ths and Quick-Reading 32nds on One Side; Quick-Reading 64ths on Reverse Side	Stainless Steel
6" Semi-Flexible Steel Rules with Inch Graduations					
Cat. No.	EDP	Length	Width x Thickness	Graduations	Feature Remarks
C303SR-6*	51335	6"	3/4 x 1/50"	3R – Quick-Reading 10ths, Aircraft Quick-Reading 50ths, 32nds and 64ths	
C304SRE-6*	51343	6"	3/4 x 1/50"	4R – 8ths, 16ths, Quick-Reading 32nds and 64ths; End Graduations in 32nds Both Ends, One Side	End Graduations

† Includes redemption card for Standard Letter of Certification (SLC).
*Indicates rules with single row of inch figures (all rules under 1" width). Rules without asterisk have double row of inch figures, and each edge represents the bottom edge reading left to right (rules 1" and wider).

H604R-6 with Reversible Hook

Steel Rules

Steel Rules with Inch Graduations

1-144"

All rules furnished with Starrett satin chrome finish, except where noted. Additional sizes and variations available by special order.

Rule Case Options

- Protective case with see through front (standard)
- Leather-like case with pocket clip (optional)

Cases for 6" (150mm) Rules		
Cat. No.	EDP	Description
1612	55433	Case with Clip for 1/2" (12.7mm) Wide Rules
1634	55434	Case with Clip for 3/4" (19mm) Wide Rules

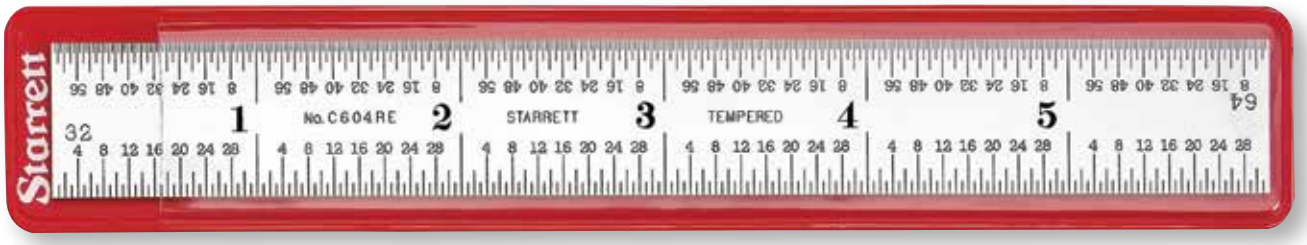

1612

6" Spring-Tempered Steel Rules with Inch Graduations					
Cat. No.	EDP	Length	Width x Thickness	Graduations	Feature Remarks
C601-6*	52639	6"	3/4 x 3/64"	1 – 10ths, 20ths, 50ths, 100ths; 12ths, 24ths, 48ths; 16ths, 32nds, 64ths; 14ths, 28ths	See Below**
604R-6* C604R-6* C604R-6 W/SLC*	52645 52678 66884	6"	3/4 x 3/64"	4R – 8ths, 16ths, Quick-Reading 32nds and 64ths	Regular Steel Finish With Standard Letter of Certification†
C604RE-6*	52660	6"	3/4 x 3/64"	4R – 8ths, 16ths, Quick-Reading 32nds and 64ths End Graduations in 32nds Both Ends, One Side	End Graduations
H604R-6* CH604R-6* DH604R-6* CD604R-6*	52667 52673 52662 52665	6"	3/4 x 3/64"	4R – 8ths, 16ths, Quick-Reading 32nds and 64ths	Regular Steel Finish; With Reversible Hook With Reversible Hook Regular Steel Finish; With Adjustable Double Hook With Adjustable Double Hook
C606R-6*	52652	6"	3/4 x 3/64"	6R – Both Sides – Aircraft Quick-Reading 50ths (.02) Both Edges One Side, Quick-Reading 10ths (.10) Both Edges, Opposite Side	
C607R-6*	52688	6"	3/4 x 3/64"	7R – 16ths, Quick-Reading 32nds, 64ths, Aircraft Quick-Reading 100ths	
C616R-6*	52701	6"	3/4 x 3/64"	16R – Quick-Reading 32nds, 64ths, Aircraft Quick-Reading 50ths, 100ths	
1604R-6*	53210	6"	3/4 x 3/64"	4R – 8ths, 16ths, Quick-Reading 32nds and 64ths	Stainless Steel
610N-6* C610N-6* H610N-6* CH610N-6*	52694 52696 52697 52699	6"	3/16 x 3/64"	10 – 32nds One Side and 64ths on Reverse Side	Regular Steel Finish; Narrow Rule Narrow Rule Regular Steel Finish; Narrow Rule with Hook Narrow Rule with Hook
611N-6*	52700	6"	3/16 x 3/64"	11 – 64ths on One Side and 100ths on Reverse Side	Regular Steel Finish; Narrow Rule

†Includes redemption card for Standard Letter of Certification (SLC).
*Indicates rules with single row of inch figures (all rules under 1" width). Rules without asterisk have double row of inch figures, and each edge represents the bottom edge reading left to right (rules 1" and wider).
**1 pattern has 12 different grads., many that are not found on usual rules. This allows the rule to be used for various purposes like laying out and cutting gear teeth (not generally used today).

Steel Rules

Steel Rules with Inch Graduations

1-144"

All rules furnished with Starrett satin chrome finish, except where noted. Additional sizes and variations available by special order.

12" Full-Flexible Steel Rules with Inch Graduations					
Cat. No.	**EDP**	**Length**	**Width x Thickness**	**Graduations**	**Feature Remarks**
C304R-12*	66009	12"	1/2 x 1/64"	4R – 8ths, 16ths, Quick-Reading 32nds and 64ths	
C305R-12* C305R-12 W/SLC*	51348 66881	12"	1/2 x 1/64"	5R – Quick-Reading 10ths, Aircraft Quick-Reading 100ths, 32nds and 64ths	With Standard Letter of Certification†
C306R-12*	51353	12"	1/2 x 1/64"	6R – One Side Only – Quick-Reading 10ths (.10) Top Edge; Aircraft Quick-Reading 50ths (.02) Bottom Edge	
C310R-12*	56429	12"	1/2 x 1/64"	10R – Quick-Reading 32nds and 64ths One Side Only	
C316R-12*	51375	12"	1/2 x 1/64"	16R – Quick-Reading 32nds, 64ths, Aircraft Quick-Reading 50ths and 100ths	
12" Semi-Flexible Steel Rules with Inch Graduations					
Cat. No.	**EDP**	**Length**	**Width x Thickness**	**Graduations**	**Feature Remarks**
C303SR-12	51336	12"	1 x 1/50"	3R – Quick-Reading 10ths, Aircraft Quick-Reading 50ths, 32nds and 64ths	
C304SRE-12	51344	12"	1 x 1/50"	4R – 8ths, 16ths, Quick-Reading 32nds and 64ths; End Graduations in 32nds Both Ends, One Side	End Graduations
12" Spring-Tempered Steel Rules with Inch Graduations					
Cat. No.	**EDP**	**Length**	**Width x Thickness**	**Graduations**	**Feature Remarks**
C601-12	52640	12"	1 x 3/64"	1 – 10ths, 20ths, 50ths, 100ths; 12ths, 24ths, 48ths; 16ths, 32nds, 64ths; 14ths, 28ths	See Note on Previous Page **
604R-12 C604R-12 C604R-12 W/SLC	52647 52679 66885	12"	1 x 3/64"	4R – 8ths, 16ths, Quick-Reading 32nds and 64ths	Regular Steel Finish With Standard Letter of Certification†
C604RE-12	52661	12"	1 x 3/64"	4R – 8ths, 16ths, Quick-Reading 32nds and 64ths; End Graduations in 32nds Both Ends, One Side	End Graduations
H604R-12 CH604R-12 DH604R-12 CD604R-12	52669 52674 52664 52666	12"	1 x 3/64"	4R – 8ths, 16ths, Quick-Reading 32nds and 64ths	Regular Steel Finish; With Reversible Hook With Reversible Hook Regular Steel Finish with Adjustable Double Hook With Adjustable Double Hook
C606R-12	52653	12"	1 x 3/64"	6R – Both Sides – Aircraft Quick-Reading 50ths (.02) Both Edges, One Side; Quick-Reading 10ths (.10) Both Edges, Opposite Side	
C607R-12	52689	12"	1 x 3/64"	7R – 16ths, Quick-Reading 32nds, 64ths, Aircraft Quick-Reading 100ths	
C616R-12	52702	12"	1 x 3/64"	16R – Quick-Reading 32nds, 64ths, Aircraft Quick-Reading 50ths, 100ths	
1604R-12	53211	12"	1 x 3/64"	4R – 8ths, 16ths, Quick-Reading 32nds and 64ths	Stainless Steel
610N-12* C610N-12* H610N-12*	52695 67103 52698	12"	3/16 x 3/64"	10 – 32nds One Side and 64ths on Reverse Side	Regular Steel Finish; Narrow Rule Narrow Rule Regular Steel Finish; Narrow Rule with Hook

† Includes redemption card for Standard Letter of Certification (SLC).
* Indicates rules with single row of inch figures (all rules under 1" width). Rules without asterisk have double row of inch figures, and each edge represents the bottom edge reading left to right (rules 1" and wider).

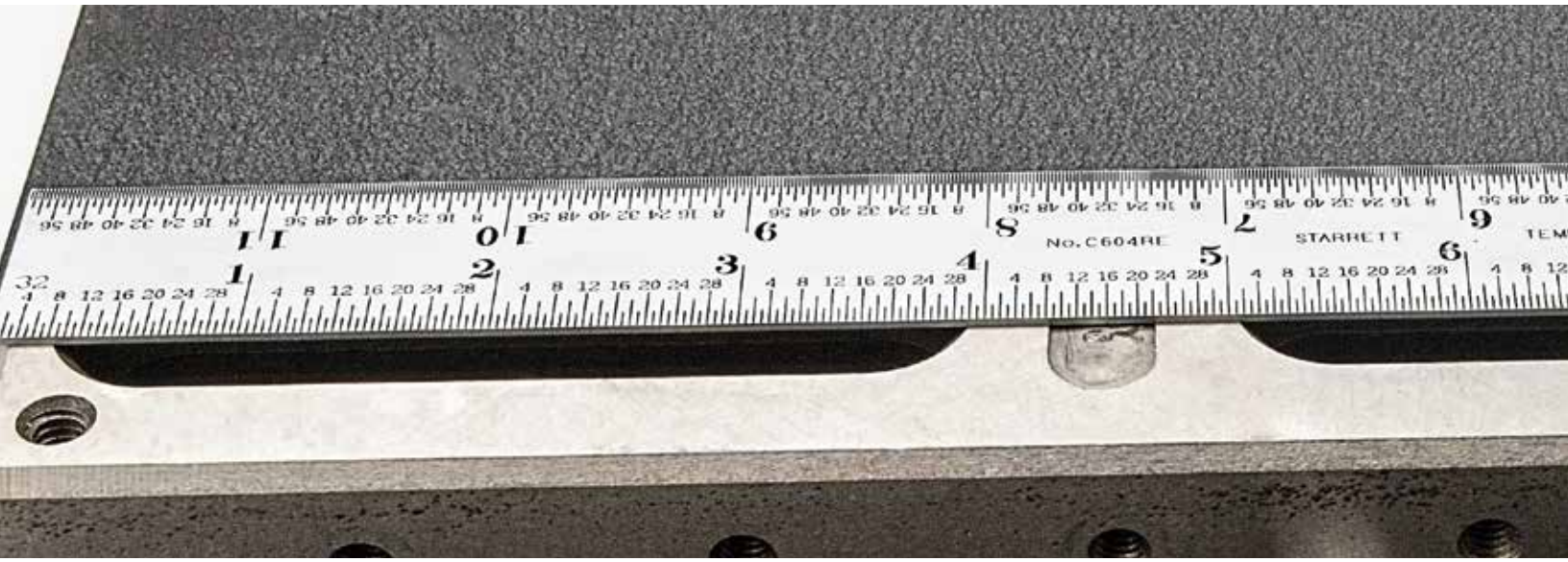

Steel Rules

Steel Rules with Inch Graduations

1-144"

All rules furnished with Starrett satin chrome finish, except where noted. Additional sizes and variations available by special order.

Cat. No.	EDP	Length	Width x Thickness	Graduations	Feature Remarks
18" Full-Flexible Steel Rules with Inch Graduations					
C305R-18*	51349	18"	3/4 x 1/50"	5R – Quick-Reading 10ths, Aircraft Quick-Reading 100ths, 32nds and 64ths	
C316R-18*	51376	18"	3/4 x 1/50"	16R – Quick-Reading 32nds, 64ths, Aircraft Quick-Reading 50ths and 100ths	
18" Spring-Tempered Steel Rules with Inch Graduations					
C604R-18	52680	18"	1-1/8 x 3/64"	4R – 8ths, 16ths, Quick-Reading 32nds and 64ths	
C604R-18 W/SLC	66886				With Standard Letter of Certification†
CH604R-18	52675				With Hook
24" Full-Flexible Steel Rules with Inch Graduations					
C304R-24	56645	24"	3/4 x 1/50"	4R – 8ths, 16ths, Quick-Reading 32nds and 64ths	
C305R-24*	51350	24"	3/4 x 1/50"	5R – Quick-Reading 10ths, Aircraft Quick-Reading 100ths, 32nds and 64ths	
C316R-24*	51377	24"	3/4 x 1/50"	16R – Quick-Reading 32nds, 64ths, Aircraft Quick-Reading 50ths and 100ths	
24" Semi-Flexible Steel Rules with Inch Graduations					
C303SR-24	51338	24"	1" x 1/50"	3R – Quick-Reading 10ths, Aircraft Quick-Reading 50ths, 32nds and 64ths	
24" Spring-Tempered Steel Rules with Inch Graduations					
C604R-24	52681	24"	1-1/4 x 3/64"	4R – 8ths, 16ths, Quick-Reading 32nds and 64ths	
C604R-24 W/SLC	66887				With Standard Letter of Certification†
CH604R-24	52676				With Hook
C607R-24	52691	24"	1-1/4 x 3/64"	7R – 16ths, Quick-Reading 32nds, 64ths, Aircraft Quick-Reading 100ths	
24" Heavy Spring-Tempered Steel Rules with Inch Graduations					
C404R-24	51484	24"	1-1/4 x 1/10"	4R – 8ths, 16ths, Quick-Reading 32nds and 64ths	
CH404R-24	51494				With Hook
C416R-24	51509	24"	1-1/4 x 1/10"	16R – Quick-Reading 32nds, 64ths, Aircraft Quick-Reading 50ths and 100ths	
CH416R-24	51519				With Hook

All C404R and C416R Rules furnished with hole in end for hanging.
† Includes redemption card for Standard Letter of Certification (SLC).
* Indicates rules with single row of inch figures (all rules under 1" width). Rules without asterisk have double row of inch figures, and each edge represents the bottom edge reading left to right (rules 1" and wider).

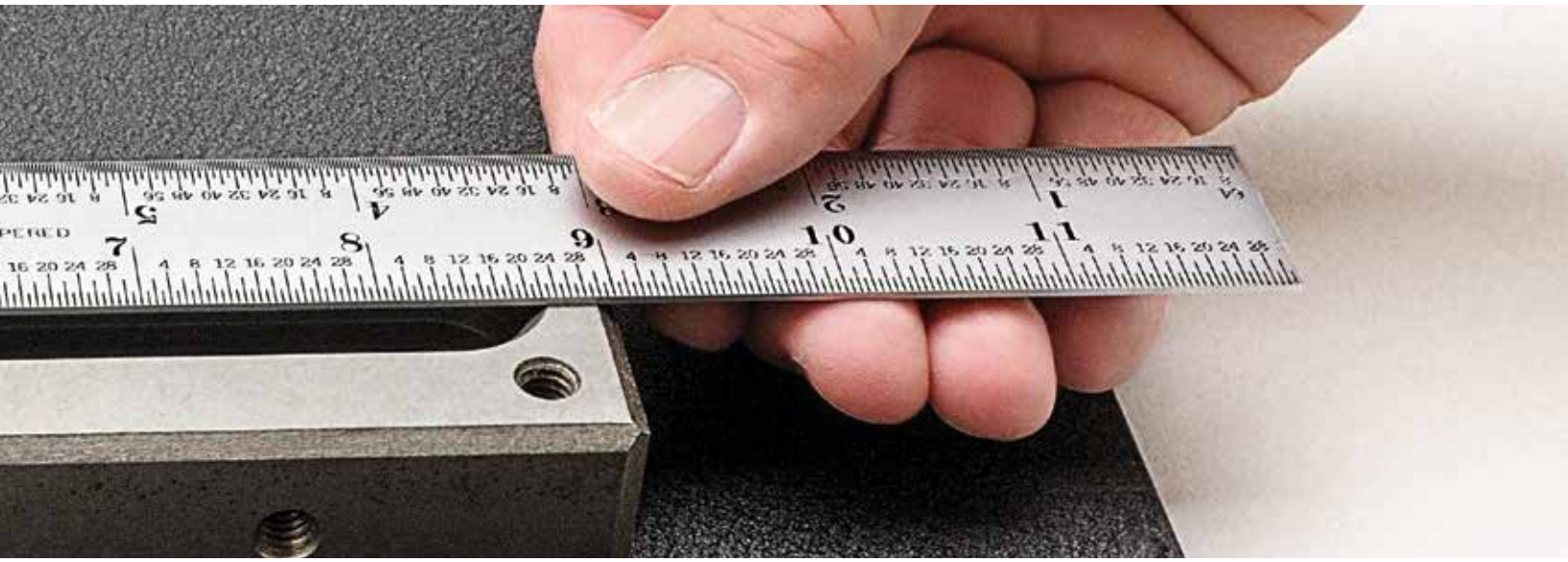

Precision Rules

Steel Rules with Inch Graduations

1-144"

All rules furnished with Starrett satin chrome finish, except where noted. Additional sizes and variations available by special order.

36" Spring-Tempered Steel Rules with Inch Graduations					
Cat. No.	**EDP**	**Length**	**Width x Thickness**	**Graduations**	**Feature Remarks**
C604R-36 CH604R-36	52682 52677	36"	1-1/4 x 3/64"	4R – 8ths, 16ths, Quick-Reading 32nds and 64ths	With Hook
C607R-36	56436	36"	1-1/4 x 3/64"	7R – 16ths, Quick-Reading 32nds, 64ths, Aircraft Quick-Reading 100ths	
36" Heavy Spring-Tempered Steel Rules with Inch Graduations					
Cat. No.	**EDP**	**Length**	**Width x Thickness**	**Graduations**	**Feature Remarks**
C404R-36 C404R-36 W/SLC CH404R-36	51485 66888 51495	36"	1-1/2 x 1/10"	4R – 8ths, 16ths, Quick-Reading 32nds and 64ths	With Standard Letter of Certification† With Hook
C416R-36 CH416R-36	51510 51520	36"	1-1/2 x 1/10"	16R – Quick-Reading 32nds, 64ths, Aircraft Quick-Reading 50ths and 100ths	With Hook
48" Spring-Tempered Steel Rules with Inch Graduations					
Cat. No.	**EDP**	**Length**	**Width x Thickness**	**Graduations**	**Feature Remarks**
C604R-48	52683	48"	1-1/4 x 3/64"	4R – 8ths, 16ths, Quick-Reading 32nds and 64ths	
C607R-48	56437	48"	1-1/4 x 3/64"	7R – 16ths, Quick-Reading 32nds, 64ths, Aircraft Quick-Reading 100ths	
48-144" Heavy Spring-Tempered Steel Rules with Inch Graduations					
Cat. No.	**EDP**	**Length**	**Width x Thickness**	**Graduations**	**Feature Remarks**
C404R-48 C404R-48 W/SLC CH404R-48	51486 66889 51496	48"	1-1/2 x 1/10"	4R – 8ths, 16ths, Quick-Reading 32nds and 64ths	With Standard Letter of Certification† With Hook
C416R-48 CH416R-48	51511 51521	48"	1-1/2 x 1/10"	16R – Quick-Reading 32nds, 64ths, Aircraft Quick-Reading 50ths and 100ths	With Hook
C404R-72 CH404R-72	51488 51498	72"	1-1/2 x 1/10"	4R – 8ths, 16ths, Quick-Reading 32nds and 64ths	With Hook
C416R-72 CH416R-72	51513 51523	72"	1-1/2 x 1/10"	16R – Quick-Reading 32nds, 64ths, Aircraft Quick-Reading 50ths and 100ths	With Hook
C404R-96 CH404R-96	56191 56474	96"	1-1/2 x 1/10"	4R – 8ths, 16ths, Quick-Reading 32nds and 64ths	With Hook
C416R-96 CH416R-96	56197 56477	96"	1-1/2 x 1/10"	16R – Quick-Reading 32nds, 64ths, Aircraft Quick-Reading 50ths and 100ths	With Hook
C404R-120 CH404R-120	56192 56475	120"	1-1/2 x 1/10"	4R – 8ths, 16ths, Quick-Reading 32nds and 64ths	With Hook
C416R-120 CH416R-120	56198 56478	120"	1-1/2 x 1/10"	16R – Quick-Reading 32nds, 64ths, Aircraft Quick-Reading 50ths and 100ths	With Hook
C404R-144 CH404R-144	56193 56476	144"	1-1/2 x 1/10"	4R – 8ths, 16ths, Quick-Reading 32nds and 64ths	With Hook
C416R-144 CH416R-144	56199 56479	144"	1-1/2 x 1/10"	16R – Quick-Reading 32nds, 64ths, Aircraft Quick-Reading 50ths and 100ths	With Hook

All C404R and C416R Rules furnished with hole in end for hanging.
† Includes redemption card for Standard Letter of Certification (SLC).

Precision Rules

Millimeter Graduation Styles

30

First Edge: None

Second Edge: 1/2mm

Fourth Edge: 1/2mm

Third Edge: mm

35

Reads both left-to-right and right-to-left.
A Starrett original feature.

First Edge: mm

Second Edge: 1/2mm

Fourth Edge: mm

Third Edge: 1/2mm

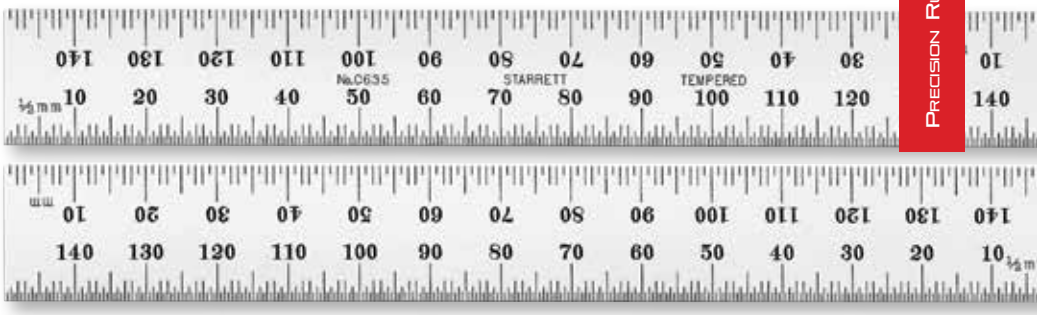

35E

First Edge: mm

End Graduations: mm

Second Edge: 1/2mm

Fourth Edge: mm

Third Edge: 1/2mm

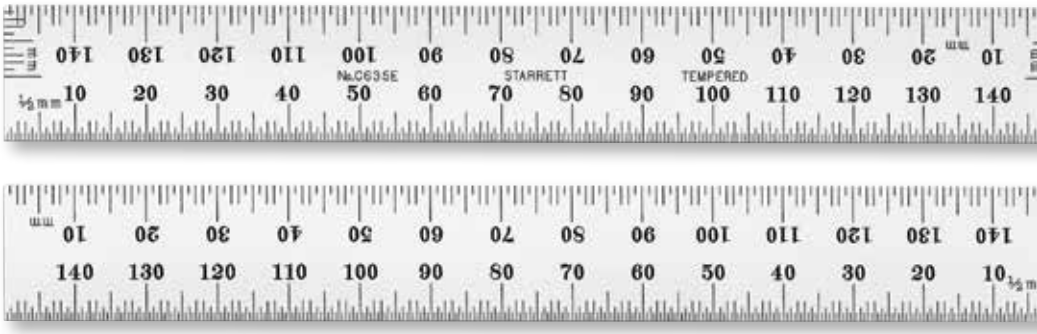

37

First Edge: mm

Second Edge: 1/2mm

Fourth Edge: 1/2mm

Third Edge: mm

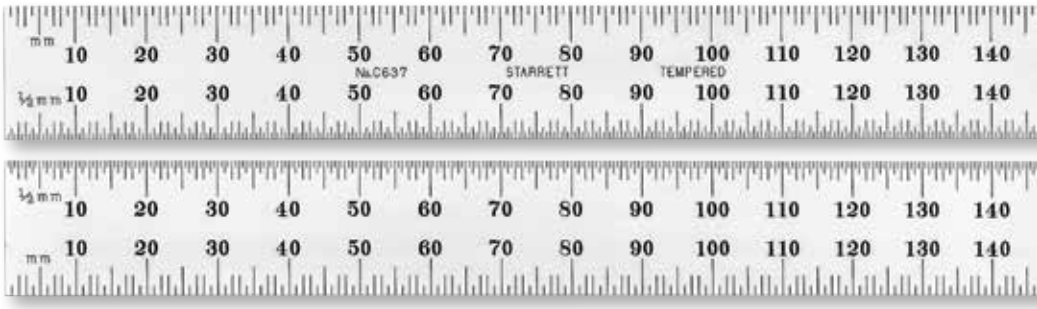

37E

First Edge: mm

End Graduations: mm

Second Edge: 1/2mm

Fourth Edge: 1/2mm

Third Edge: mm

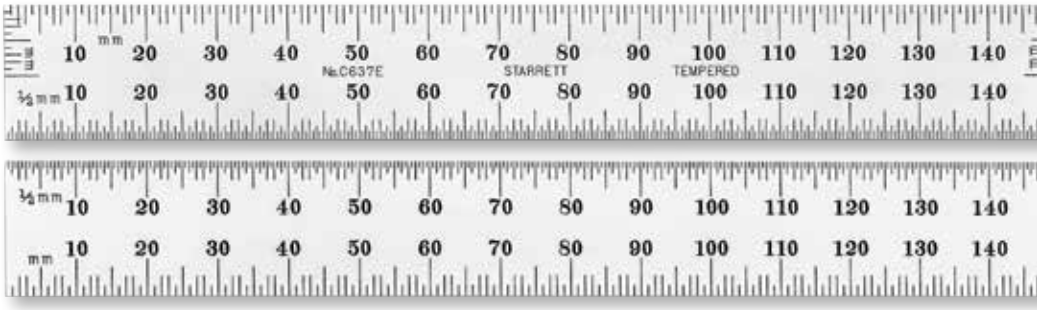

NOTE: All rules under 25mm in width have single row of millimeter figures. Rules 25mm and wider have double row of millimeter figures, and each edge represents the bottom edge reading left to right.

Steel Rules

Steel Rules with Millimeter Graduations

150-1800MM

All rules furnished with Starrett satin chrome finish, except where noted. Additional sizes and variations available by special order.

Rules include:

- Full-Flexible
- Semi-Flexible
- Spring-Tempered
- Heavy Spring-Tempered

Catalog Number Legend	
Prefixes	
C	Satin Chrome Finish
Suffixes	
E	End Graduations
N	Narrow-Type Rule
S	Semi-Flexible

150mm Full-Flexible Steel Rules with Millimeter Graduations					
Cat. No.	**EDP**	**Length**	**Width x Thickness**	**Graduations**	**Feature Remarks**
C330-150* C330-150 W/SLC*	51329 66882	150mm	12.7 x 0.4mm	30 – 1/2mm One Side; mm and 1/2mm on Reverse	With Standard Letter of Certification**
150mm Spring-Tempered Steel Rules with Millimeter Graduations					
Cat. No.	**EDP**	**Length**	**Width x Thickness**	**Graduations**	**Feature Remarks**
C635-150 C635-150 W/SLC	52630 66893	150mm	19 x 1.2mm	35 – mm and 1/2mm Both Sides	With Standard Letter of Certification**
C635E-150	55968	150mm	19 x 1.2mm	35E – mm and 1/2mm Both Sides; mm on Both Ends One Side	End Graduations
635N-150	70164	150mm	4.8 x 1.2mm	35 – mm One Edge and 1/2mm One Edge on Reverse	Narrow Rule, Regular Steel Finish
C637-150	56049	150mm	19 x 1.2mm	37 – mm and 1/2mm Both Sides	
C637E-150	55969	150mm	19 x 1.2mm	37E – mm and 1/2mm Both Sides; mm on Both Ends One Side	End Graduations
300mm Full-Flexible Steel Rules with Millimeter Graduations					
Cat. No.	**EDP**	**Length**	**Width x Thickness**	**Graduations**	**Feature Remarks**
C330-300* C330-300 W/SLC*	51330 66883	300mm	12.7 x 0.4mm	30 – 1/2mm One Side; mm and 1/2mm on Reverse	With Standard Letter of Certification**
300mm Semi-Flexible Steel Rules with Millimeter Graduations					
Cat. No.	**EDP**	**Length**	**Width x Thickness**	**Graduations**	**Feature Remarks**
C335S-300	56048	300mm	25.4 x 0.5mm	35 – mm and 1/2mm Both Sides	
300mm Spring-Tempered Steel Rules with Millimeter Graduations					
Cat. No.	**EDP**	**Length**	**Width x Thickness**	**Graduations**	**Feature Remarks**
C635-300 C635-300 W/SLC	52631 66894	300mm	25.4 x 1.2mm	35 – mm and 1/2mm Both Sides	With Standard Letter of Certification**
500mm Spring-Tempered Steel Rules with Millimeter Graduations					
Cat. No.	**EDP**	**Length**	**Width x Thickness**	**Graduations**	**Feature Remarks**
C635-500	52632	500mm	29 x 1.2mm	35 – mm and 1/2mm Both Sides	
1000mm Spring-Tempered Steel Rules with Millimeter Graduations					
Cat. No.	**EDP**	**Length**	**Width x Thickness**	**Graduations**	**Feature Remarks**
C635-1000	52633	1000mm	32 x 1.2mm	35 – mm and 1/2mm Both Sides	
1800mm Heavy Spring-Tempered Steel Rules with Millimeter Graduations					
Cat. No.	**EDP**	**Length**	**Width x Thickness**	**Graduations**	**Feature Remarks**
C635-1800MM	64299	1800mm	38 x 2.5mm	35 – mm and 1/2mm Both Sides	

** Includes redemption card for Standard Letter of Certification (SLC).

* Indicates rules with single row of millimeter figures (all rules under 25mm width). Rules without asterisk have double row of millimeter figures, and each edge represents the bottom edge reading left to right (rules 25mm and wider).

Precision Rules

Millimeter and Inch Graduation Styles

31

First Edge: 32nds

Second Edge: 64ths

Fourth Edge: 1/2mm

Third Edge: mm

34

irst Edge: 10ths

Second Edge: 50ths

Fourth Edge: mm

Third Edge: 1/2mm

36*

First Edge: 32nds

Second Edge: 1/2mm

Fourth Edge: mm

Third Edge: 64ths

CATALOG C636EM-6

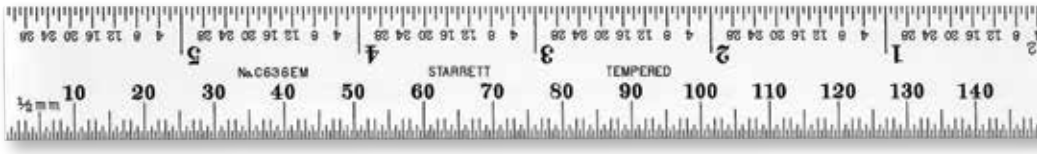

31, 34, and 36* Styles are graduated as follows:

- 150mm end-to-end on mm edges and to 5-3/4" with a blank end on the inch edges
- 300mm end-to-end on mm edges and to 11-3/4" with a blank end on the inch edges
- 500mm end-to-end on mm edges and to 19-1/2" with a blank end on the inch edges
- 1000mm end-to-end on mm edges and to 39-1/4" with a blank end on the inch edges

Catalog C636EM-6 is graduated as follows:

- 6" end-to-end on the inch edges and to 150mm with a blank end on the mm edges

NOTE: * Millimeter/Inch scale with emphasis on millimeter. Overall length is 150mm (5.905").
Inch graduations stop at 5-3/4" to avoid confusion.

Steel Rules

Steel Rules with Millimeter and Inch Graduations

150MM-1000MM

All rules are full millimeter lengths, except where noted. Additional sizes and variations available by special order.

Rules include:

- Full-Flexible
- Spring-Tempered

Key to Starrett Rule Numbering System	
Prefixes	
C	Satin Chrome Finish
Suffixes	
EM	English/ Metric
ME	Metric/English

150mm - 5-3/4" Full-Flexible Steel Rules with Millimeter and Inch Graduations					
Cat. No.	**EDP**	**Length**	**Width x Thickness**	**Graduations**	**Feature Remarks**
C331-150	51331	150mm	12 x 0.4mm	31 – 32nds and 64ths on One Side; mm and 1/2mm on Reverse. All Four Edges Graduated from Same End	
C334-150	56262	5-3/4"	12 x 0.4mm	34 – mm and 1/2mm on One Side; Quick-Reading 10ths (.10) and Aircraft Quick-Reading 50ths (.02) on Reverse	
150mm - 6" Spring-Tempered Steel Rules with Millimeter and Inch Graduations					
Cat. No.	**EDP**	**Length**	**Width x Thickness**	**Graduations**	**Feature Remarks**
C636ME-150 C636ME-150 W/SLC	52634 66890	150mm (5-3/4")	19 x 1.2mm	36 – 32nds and 1/2mm on One Side; 64ths and mm on Reverse	With Standard Letter of Certification*
C636EM-6	57064	150mm 6"	19 x 1.2mm	36 – 32nds and 1/2mm on One Side; 64ths and mm on Reverse	Full 6" with Millimeter Reading to 150mm; plus a Blank End
300mm - 11-3/4" Full-Flexible Steel Rules with Millimeter and Inch Graduations					
Cat. No.	**EDP**	**Length**	**Width x Thickness**	**Graduations**	**Feature Remarks**
C331-300	51332	300mm	12.7 x 0.4mm	31 – 32nds and 64ths on One Side; mm and 1/2mm on Reverse. All Four Edges Graduated from Same End	
C334-300	56696	11-3/4"	12.7 x 0.4mm	34 – mm and 1/2mm One Side; Quick-Reading 10ths (.10) and Aircraft Quick-Reading 50ths (.02) on Reverse	
300mm - 11-3/4" Spring-Tempered Steel Rules with Millimeter and Inch Graduations					
Cat. No.	**EDP**	**Length**	**Width x Thickness**	**Graduations**	**Feature Remarks**
C636-300 C636-300 W/SLC	52635 66891	300mm (11-3/4")	25.4 x 1.2mm	36 – 32nds and 1/2mm on One Side; 64ths and mm on Reverse	With Standard Letter of Certification*
500mm - 19-1/2" Full-Flexible Steel Rules with Millimeter and Inch Graduations					
Cat. No.	**EDP**	**Length**	**Width x Thickness**	**Graduations**	**Feature Remarks**
C334-500	56697	500mm (19-1/2")	19 x 0.5mm	34 – mm and 1/2mm on One Side; Quick-Reading 10ths (.10) and Aircraft Quick-Reading 50ths (.02) on Reverse	
500mm – 19-1/2" Spring Tempered Steel Rules with Millimeter and Inch Graduations					
Cat. No.	**EDP**	**Length**	**Width x Thickness**	**Graduations**	**Feature Remarks**
C636MEC-500	73320	500mm (19-1/2")	32 x 1.1mm	Zero scale on 32nds and 1/2mm Side; Incremental Scale on 64ths and mm Side	
500mm - 19-1/2" Spring-Tempered Steel Rules with Millimeter and Inch Graduations					
Cat. No.	**EDP**	**Length**	**Width x Thickness**	**Graduations**	**Feature Remarks**
C636-500	52636	500mm (19-1/2")	29 x 1.2mm	36 – 32nds and 1/2mm on One Side; 64ths and mm on Reverse	
1000mm - 39-1/4" Spring-Tempered Steel Rules with Millimeter and Inch Graduations					
Cat. No.	**EDP**	**Length**	**Width x Thickness**	**Graduations**	**Feature Remarks**
C636-1000 C636-1000 W/SLC	52637 66892	1000mm (39-1/4")	32 x 1.2mm	36 – 32nds and 1/2mm on One Side; 64ths and mm on Reverse	With Standard Letter of Certification*

* Includes redemption card for Standard Letter of Certification (SLC).

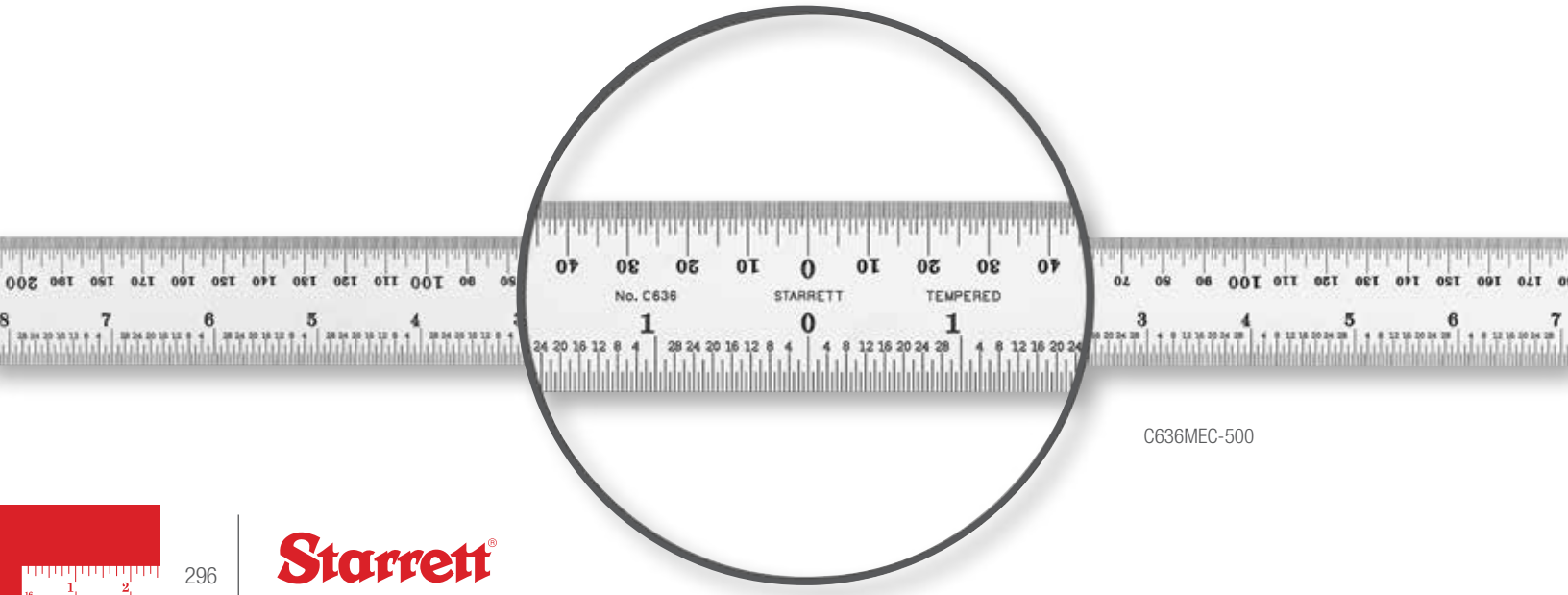

C636MEC-500

Steel Rules

Steel Rules with Shrink Graduations

12", 24"

These spring-tempered, satin chrome finished shrink rules are for laying out wood and metal patterns and core boxes for casting metals. Graduated to give shrink allowances directly, they come in 12" and 24" lengths with shrinks from 1/16-3/8" per foot.

The average shrinkage figures are for metals cast with uniform sections under normal conditions (see table). When using, be sure that the size and shape of castings are considered, since thick castings have less shrink and thin castings more shrink than the figures shown.

NOTE: Also see 62 Rule Holder. A very useful tool for patternmakers.

Average Shrinkage of Castings (Inches per Foot)	
Cast Iron	1/8"
Malleable Iron	1/8"
Steel	1/4"
Brass	3/16"
Copper	3/16"
Aluminum	3/16"
Lead	5/16"
Zinc	5/16"
Britannia	1/32"
Tin Alloys	1/12"

Steel Rules with Shrink Graduations

Cat. No.	EDP	Length	Width x Thickness	Shrink Per Foot	Graduation
C374-12 C370-12	51430 51428	12"	1 x 3/64"	1/10" 1/8"	4R – 8ths, 16ths, Quick-Reading 32nds, 64ths
C389-12	51473	12"	1 x 3/64"	5/32"	4R – 8ths, 16ths, Quick-Reading 32nds, 64ths
C100F-12	50458	12"	1 x 3/64"	3/16"	6R – Aircraft Quick-Reading 50ths (.02) Both Edges One Side; Quick-Reading 10ths (.10); Both Edges Opposite Side
C375-12 C376-12 C377-12 C378-12 C368-12	51432 51434 51435 51437 51424	12"	1 x 3/64"	3/16" 7/32" 1/4" 9/32" 5/16"	4R – 8ths, 16ths, Quick-Reading 32nds, 64ths
C374-24 C370-24 C389-24	51431 51429 51474	24"	1-1/4 x 3/64"	1/10" 1/8" 5/32"	4R – 8ths, 16ths, Quick-Reading 32nds, 64ths
C100F-24	50459	24"	1-1/4 x 3/64"	3/16"	6R – Aircraft Quick-Reading 50ths (.02) Both Edges One Side; Quick-Reading 10ths (.10); Both Edges Opposite Side
C375-24 C377-24 C368-24	51433 51436 51425	24"	1-1/4 x 3/64"	3/16" 1/4" 5/16"	4R – 8ths, 16ths, Quick-Reading 32nds, 64ths

C375-12

Steel Rules

C622R-6 Steel Rule with Decimal Equivalents

6"

One side of this handy rule has accurate, photo-engraved, distinctive graduations in both Quick-Reading 32nds and 64ths. The reverse side has a legible table of fractions and decimal equivalents. Made of finest spring-tempered steel with no-glare satin chrome finish.

6" Steel Rule with Decimal Equivalents			
Cat. No.	EDP	Width x Thickness	Graduation
C622R-6	56660	3/4 x 3/64"	10R – Quick-Reading 32nds and 64ths One Side and Decimal Equivalents on Reverse Side

C622R-6

C623R-6 Steel Rule with Letter and Number Drill Sizes

6"

This practical shop rule has accurate, photo-engraved graduations in 32nds and 64ths with Quick-Reading figures on one side. The reverse side has letter sizes of drills from A to Z with corresponding diameters in thousandths and also number sizes from 1 to 80 with diameters in thousandths. Made of fine spring-tempered steel with no-glare satin chrome finish.

6" Steel Rule with Letter and Number Drill Sizes			
Cat. No.	EDP	Width x Thickness	Graduation
C623R-6	56661	3/4 x 3/64"	10R – Quick-Reading 32nds and 64ths One Side and Letter and Number Drill Sizes on Reverse Side

C623R-6

Steel Rules

414 Steel General Utility Rules – English Pattern

12", 24"

These tempered steel rules are designed to meet the general-utility measuring needs of schools and shops, wood-workers, tinsmiths, metalworkers, bench-work, etc. Photo-engraved graduations are heavier than conventional machine-divided rules and easy to read. The two edges on both sides are graduated with the upper edges in 8ths and the lower edges in 16ths of an inch. A 1/4" hang-hole is on one end.

414 Steel General Utility Rules – English Pattern				
Cat. No.	EDP	Length	Width x Thickness	Graduation
414-1	51499	12"	1-1/4 x 1/16"	8ths, 16ths of an Inch, Both Sides
414-2	51500	24"		

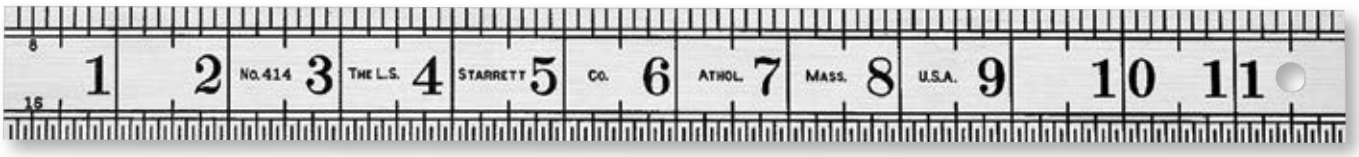

414-1

471 Steel Folding Rule with Circumference Measurement

24"

Tinsmiths and other mechanics appreciate this rule because it measures diameters up to 24" as well as the equivalent circumference measurement in direct-reading circumference inches, up to 75". Entirely eliminates the need for circumference calculations. Made of fine, spring-tempered steel and jointed at the center with two 12" folds. Photo-engraved graduations.

24" Steel Folding-Rule with Circumference Measurement			
Cat. No.	EDP	Width x Thickness	Graduation
471	52483	3/4" x 1/32"	8ths and Circumference 8ths on One Side; 16ths on Reverse Side

471

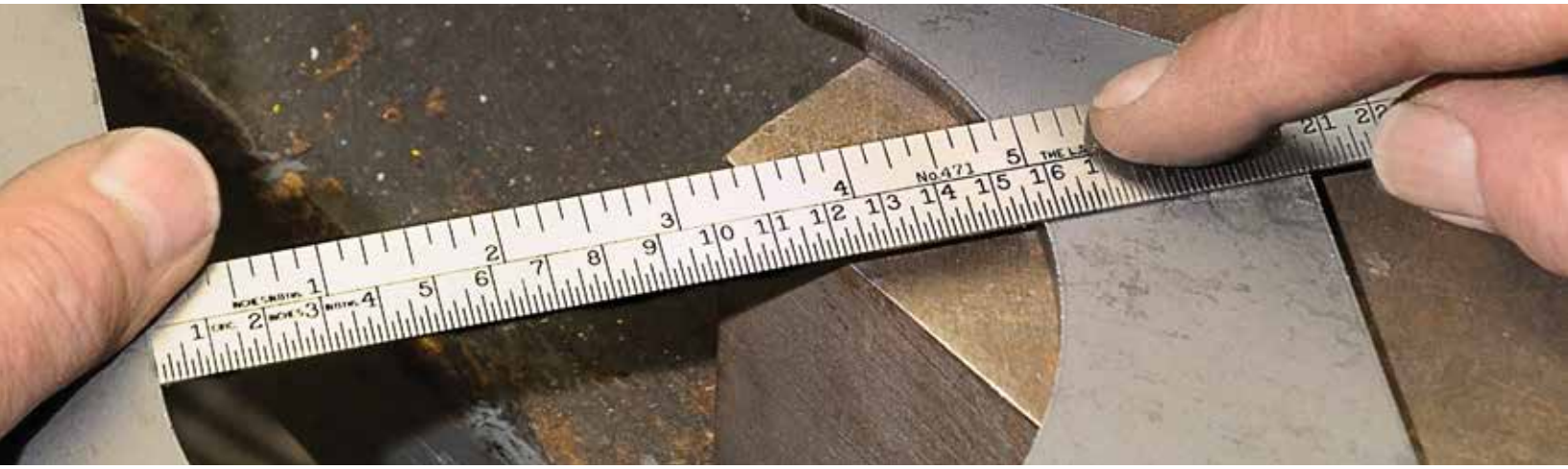

Clamps

Key Seat Clamps

These key seat clamps convert steel rules, combination square blades and straight edges into key seat rules for laying out keyways and scribing parallel lines on round work. They can be easily attached or removed. Made of steel, case hardened, and accurately ground, they are 1" long x 7/16" wide (25 x 11mm) and have a 7/64" (2.8mm) slot width. Available in pairs only.

Key Seat Clamps		
Cat. No.	**EDP**	**Description**
298	51327	Pair of key seat clamps

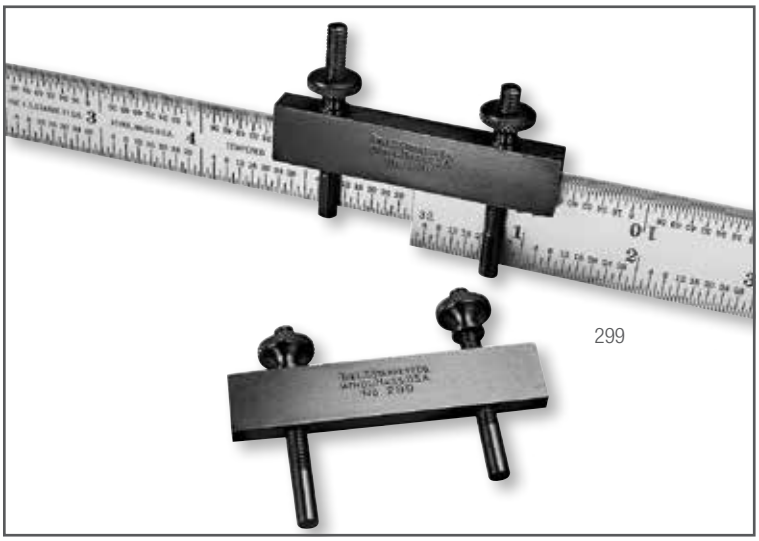

299

Rule Clamp

This useful tool is for clamping two steel rules together, end to end, making one long rule for measuring longer lengths than a single rule. Since the clamp bolts have independent adjustment, the rule clamp will hold rules of the same or different widths up to 1-1/4" (32mm). This clamp is handy for mechanics whose tool chests will not hold rules over 12" (300mm) long.

Rule Clamp		
Cat. No.	**EDP**	**Description**
299	51328	Rule clamp

Holders

62 Rule Holder

The 62 Rule Holder is designed primarily for patternmakers, toolmakers and machinists. It will hold any rule or combination square blade from 3/4 – 1-9/16" (19-40mm) wide in an upright position for use in transferring measurements with surface gages, etc. It is also handy for use as a depth gage. A large knurled clamp nut securely locks the rule in the holder.

The base is approximately 3-1/8" long and 2-1/2" wide (80 x 60mm). There is a depression on each side for thumb and fingers for handling convenience.

62 Rule Holder		
Cat. No.	**EDP**	**Description**
62	50304	Holder only

Transferring measurements with a Starrett Surface Gage used in conjunction with rule and rule holder

62

423 Small Steel Rules with Holder

1/4, 3/8, 1/2, 3/4, 1"

This set of five small rules is extremely useful for measurements in confined or hard-to-reach locations. They are especially suitable for measuring grooves, short shoulders, recesses, keyways, and in tool and die work.

The 4" long holder is well balanced. The rules are easily inserted in the slotted end of the holder and are rigidly clamped in place by a slight turn of a knurled nut. Two slots are provided, so the rules can be held at 30º or 45º, either square in a slot or tipped to one side.

Thicknesses up to 1/16" can be clamped in either slot. Rules are made of thin, spring-tempered steel, with bright finish and highly accurate, photo-engraved graduations. Each rule is graduated in 32nds of an inch on one side and 64ths on the reverse.

423 Small Steel Rules with Holder		
Cat. No.	**EDP**	**Description**
S423Z	51524	Set of 5 rules with holder in attractive, protective case
110	50475	Holder Only

S423Z

Steel Straight Edges

380 Steel Straight Edges

385 Steel Straight Edges with Bevel Edge

12-72"/300-1800MM

387 Steel Straight Edges with Bevel and Graduated Edge

12-48"/300-1200MM

These straight edges are precision ground and nicely finished to rigid Starrett standards. They are unexcelled for drawing or scribing straight lines and checking surfaces for straightness. Their thickness and design permit them to retain shape and accuracy, but still be portable and easy to handle.

The 380 Straight Edge is not beveled or graduated. The 385 straight edge is beveled one edge, but not graduated. The 387 straight edge has one edge that is both beveled and graduated in 32nds of an inch.

The 380 and 385 Straight Edges in sizes 36" and longer are marked with arrows at two suspension points. If the straight edges are brought to the work and used on edge, they should be suspended at these two points to minimize deflection. Most jobs involve the use of straight edges in the flat position – and it is in this position that we check most stringently.

380

385-12

387-12

Steel Straight Edges

380		385 with Bevel		387 with Bevel, Graduations		Length		Width x Thickness	
Cat. No.	EDP	Cat. No.	EDP	Cat. No.	EDP	in	mm	in	mm
380-12	51438	385-12	51455	387-12	51468	12	300	1-13/32 x 11/64	36 x 4.4
380-18	51439	385-18	51456	387-18	51469	18	450	1-13/32 x 11/64	36 x 4.4
380-24 380-24 W/SLC*	51440 66895	385-24	51457	387-24	51470	24	600	1-13/32 x 11/64	36 x 4.4
380-36	51441	385-36	51458	387-36	51471	36	900	2-13/32 x 7/32	60 x 5.5
380-48	51442	385-48	51459	387-48	51472	48	1200	2-13/32 x 7/32	60 x 5.5
380-72	51444	385-72	51461			72	1800	3-5/32 x 9/32	80 x 7

* Includes redemption card for Standard Letter of Certification (SLC).

386 Draftsmen's Steel Straight Edges with Bevel Edge

12-72"/300-1800MM

These straight edges are thinner than our 385 straight edge (3/32" or 2.4mm) making them easier for draftsmen to use. Available in lengths up to 72" long. They have an attractive nickel plated finish, are beveled on one edge, and have a convenient hang-hole on one end.

386 Draftsmen's Steel Straight Edges with bevel edge

		Length		Width x Thickness	
Cat. No.	EDP	in	mm	in	mm
386-12	51462	12	300	1-9/16 x 3/32	40 x 2.4
386-24	51463	24	600	1-9/16 x 3/32	40 x 2.4
386-36	51464	36	900	1-9/16"x 3/32	40 x 2.4
386-48	51465	48	1200	2-1/8 x 3/32	54 x 2.4
386-72	51467	72	1800	2-5/8 x 7/64	66 x 2.8

386-12

Parallels

384 Steel Parallels

1/8" X 1" - 1/2" X 1-1/4"/3 X 25MM - 13 X 31MM

The 384 Steel Parallels are hardened and ground to close limits. They are indispensable for inspection and layout work or for various setups on drill presses, milling and grinding machines, shapers, etc. Furnished in pairs, 6" length, they are made from a special grade of tool steel, hardened and accurately ground on the four sides. In tool rooms or machine shops, several pairs of these parallels will be of great value.

S384JZ Parallel Set

384 Steel Parallels, 6" (150mm) Length					
Pairs		Thickness		Width	
Cat. No.	EDP	in	mm	in	mm
384A	51445	1/8	3	1	25
384C	51447	3/16	5	7/8	22
384E	51449	1/4	6	3/4	19
384F	51450			1	25
384G	51451	3/8	10	1/2	13
384H	51452			3/4	19
384M	63645	1/4	6	3/8	10
384N	63646			1/2	13
384P	63647			5/8	16
384R	63648	3/8	10	1	25
384S	63649	1/2	13	5/8	16
384T	63650			3/4	19
384W	63651			1	25
384X	63652			1-1/8	28
384Y	63653			1-1/4	31

384 Steel Parallel Sets		
Cat. No.	EDP	Description
S384JZ	51453	Set of 4 Pairs – Sizes A, C, E, G – In Case
S384-1Z	63676	Set of 4 Pairs – Sizes N, M, P, F – In Case
S384-2Z	63677	Set of 4 Pairs – Sizes G, H, R, M – In Case
S384-3Z	63678	Set of 5 Pairs – Sizes S, T, W, X and Y – In Case

S384-3Z

Parallels

154 Adjustable Parallels

3/8 – 2-1/4"/9.5-57MM

These adjustable parallels provide a wide range of use in layout, gaging, inspection work and for setups on various machine tools. Their adjustablity makes it possible to adjust them to exact size by micrometer measurement and also permits use in place of several solid-type parallels.

These parallels are useful as gages in checking the size of slots and openings. They are also convenient for use in machine vises, for leveling or adjusting work on setups of milling and grinding machines, shapers, planers, drill presses and for many other applications.

Parallels slide smoothly and can be easily adjusted. The smaller sizes A, B, and C, are locked by one screw while the larger sizes, D, E, and F, have two lock screws. All parallels are 9/32" (7mm) thick.

Set S154LZ with 154E in foreground

154 Adjustable Parallels					
		Range		Length	
Cat. No.	EDP	in	mm	in	mm
154A	50578	3/8 – 1/2	9.5-12.7	1-3/4	45
154B	50579	1/2 – 11/16	12.7-17.5	2-1/8	55
154C	50580	11/16 – 15/16	17.5-24	2-11/16	70
154D	50581	15/16 – 1-5/16	24-33	3-9/16	90
154E	50582	1-5/16 – 1-3/4	33-44	4-3/16	105
154F	50583	1-3/4 – 2-1/4	44-57	5-1/16	130

154 Adjustable Parallel Sets		
Cat. No.	EDP	Description
S154SZ	50584	Set of 4 parallels – Sizes A, B, C, D – In case
S154LZ	50586	Set of 6 parallels – Sizes A, B, C, D, E, F – In case
S154SZZ	55194	Case only for set of 4
S154LZZ	55195	Case only for set of 6

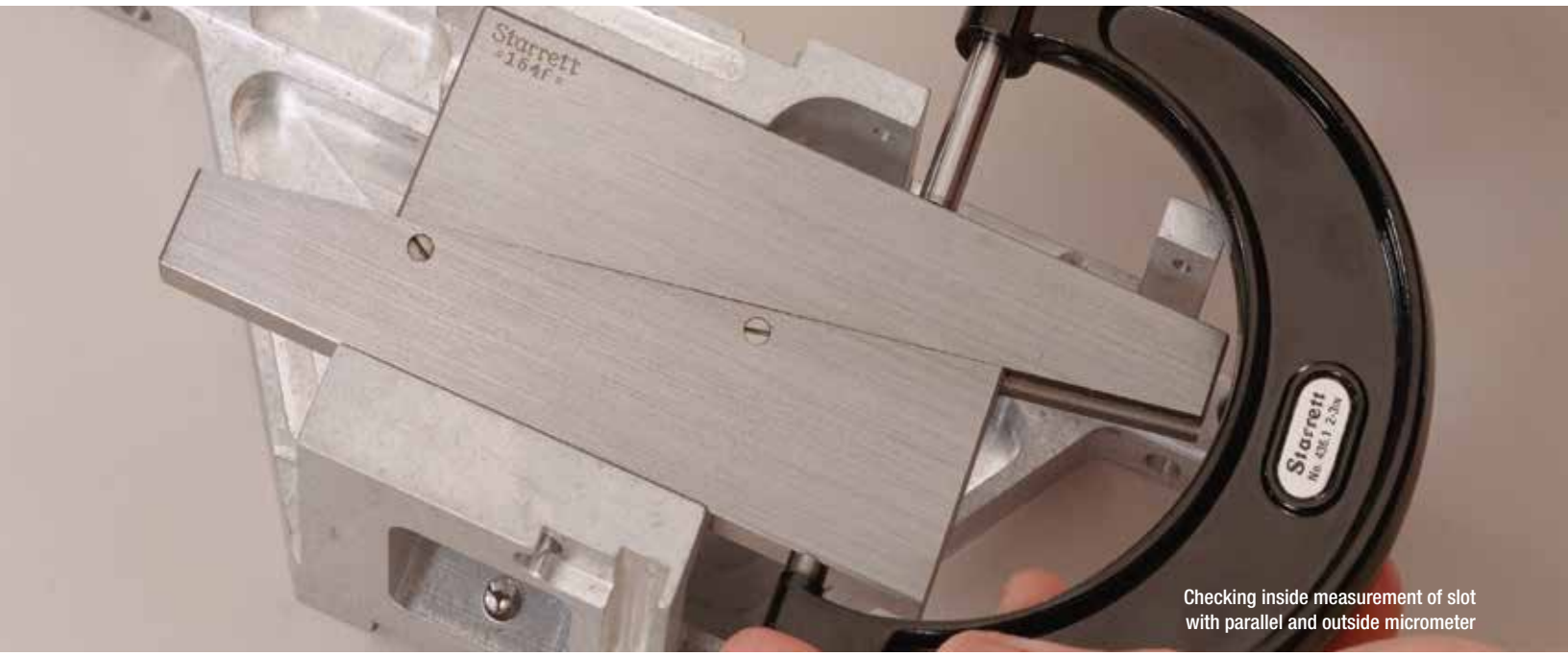

Checking inside measurement of slot with parallel and outside micrometer

PROTRACTORS, ANGLE MEASUREMENT

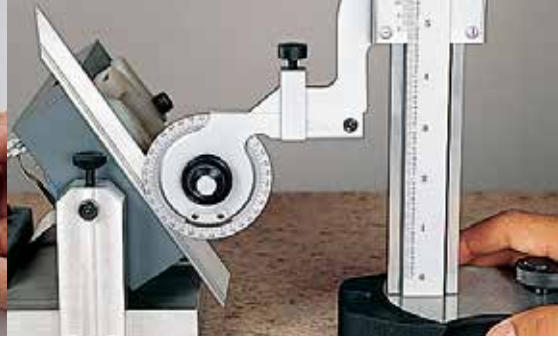

Protractors

359 Precision Universal Bevel Vernier Protractors with Fine Adjustment

GRADUATIONS IN DEGREES THRU 360º

These tools are designed for precision measuring and for laying out angles. The protractor is one of the most valuable and useful tools for the kit of every good toolmaker, inspector or machinist.

359 Precision Universal Bevel Vernier Protractors - Graduations in Degrees through 360º

In Case Cat. No.	EDP	Blade Size	Graduation
C359BZ	51394	7"	5 min. or 1/12 degree
C359DZ	51396	12"	5 min. or 1/12 degree
C359FZ	51398	7" and 12"	5 min. or 1/12 degree
C359FZ W/SLC*	66929		

Accessories for 359 Precision Universal Bevel Vernier Protractors

Cat. No.	EDP	Description
PT04780	70538	7" Blade Only
PT04781	70539	12" Blade Only
PT99329	51392	Acute Angle Attachment Only

* Includes redemption card for Standard Letter of Certification (SLC).

Readability Features

- Satin chrome finish on all reading surfaces – eliminates glare and resists rust
- Sharp, machine-divided graduations

Ease-of-Handling Features

- Available with hardened 7" (175mm) or 12" (300mm) blades which can be rotated to the desired angle and adjusted to the desired length
- Both the dial and the blade can be locked independently
- An acute angle attachment is available
- Flush surfaces on the base permits use on height gages
- One side of the tool is flat so it can be laid on paper or on the work

Accuracy Features

- Machine-divided graduations read to 5 minutes (1/12 of a degree) and accuracy is finer than can be read
- The most convenient, ultra-sensitive fine adjustment for precision setting

How to Read a Vernier on Universal Bevel Protractors

Universal Bevel Protractors with Vernier can be accurately read to 5 minutes (5') or 1/12 of a degree. The dial of the protractor is graduated both to the right and left of zero up to 90 degrees. The Vernier scale is also graduated to the right and left of zero up to 60 minutes (60'), each of the 12 Vernier graduations representing 5 minutes. Any angle can be measured, and remember that the Vernier reading must be read in the same direction from zero as the protractor, either left or right.

Since 12 graduations on the Vernier scale occupy the same space as 23 graduations or 23 degrees on the protractor dial, each Vernier graduation is 1/12 degree or 5 minutes shorter than 2 graduations on the protractor dial. Therefore, if the zero graduation on the Vernier scale coincides with a graduation on the protractor dial, the reading is in exact degrees, but if some other graduation on the Vernier scale coincides with a protractor graduation, the number of Vernier graduations multiplied by 5 minutes must be added to the number of degrees read between the zeros on the protractor dial and Vernier scale.

Example:

★In the illustration on the below, the zero on the Vernier scale lies between the "50" and "51" on the protractor dial to the left of the zero, indicating 50 whole degrees. Also reading to the left, the 4th line on the Vernier scale coincides with a graduation on the protractor dial as indicated by the stars (★) and therefore 4 x 5 minutes or 20 minutes are to be added to the number of degrees. The reading of the protractor therefore, is 50 degrees and 20 minutes (50º 20').

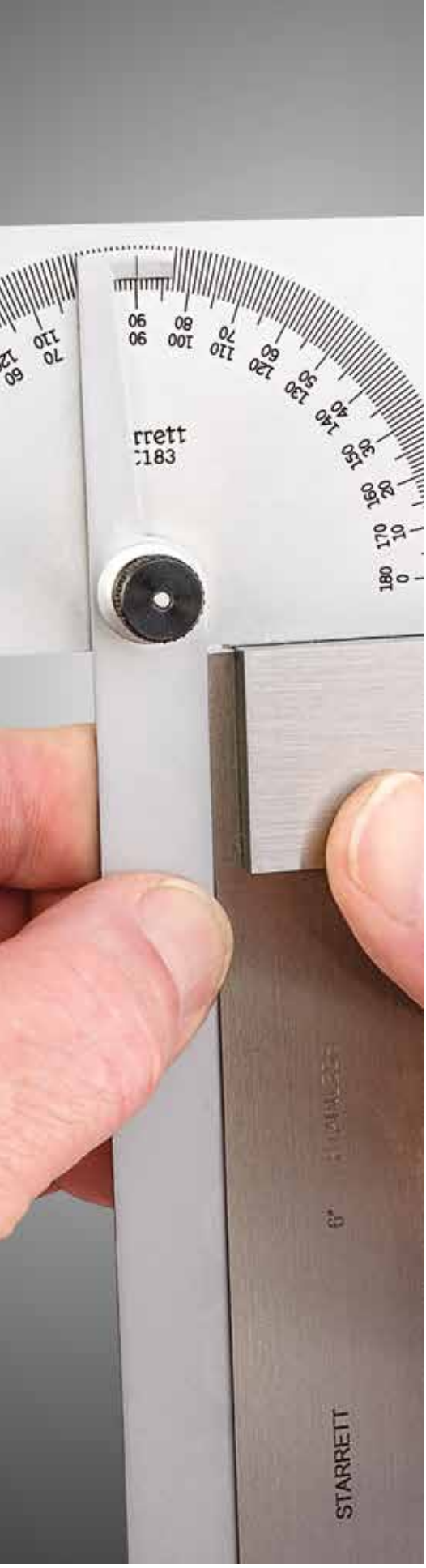

Steel Protractors

C19 Steel Protractor

0-180º

This is a highly useful and accurate tool for setting bevels, transferring angles, small squaring tasks, checking cutter clearances within certain limits, and many other applications.

- Double graduations from 0-180º in opposite directions permitting the direct reading of angles and supplementary angles
- The back of the tool is flat for ease of use
- The blade can be locked firmly at any angle by the lock nut
- Satin chrome finish for ease of reading and resistance to rust

C183 Steel Protractor

0-180º

This protractor is exactly the same as the C19, except that is has a rectangular head, thus providing four convenient working edges.

C182 Steel Protractor

0-180º

This protractor has the same type of head as our 19 but it is designed for draftsmen, civil engineers, and others who need a protractor that will allow the drawing of any number of radial lines at any angle through a common center. This is especially useful for someone in the field who can only carry a minimum of equipment. Weight is approximately 3 ounces.

To use the protractor, the fulcrum point is pressed into the drawing at the required center. This is done by removing the fulcrum point from the hub, pressing it in the drawing, and then placing the protractor hub over the fulcrum point. The desired angles can then be laid out.

The fulcrum point can be left in the tool. Press the whole tool down so that the point penetrates the drawing. (However, this will make it harder to find the center.)

When not in use, the fulcrum point can be drawn back into the hub and frictionally held in a safe position.

Satin chrome finish for ease of reading and resistance to rust.

Furnished with one needle point and one cone point.

Steel Protractors			
Cat. No.	EDP	Blade Length	Range
C19	50127	6"	0-180º
C183	50672		
C183 W/SLC*	66930		
C182	64361		

* Includes redemption card for Standard Letter of Certification (SLC).

Side view of protractor with fulcrum point in place

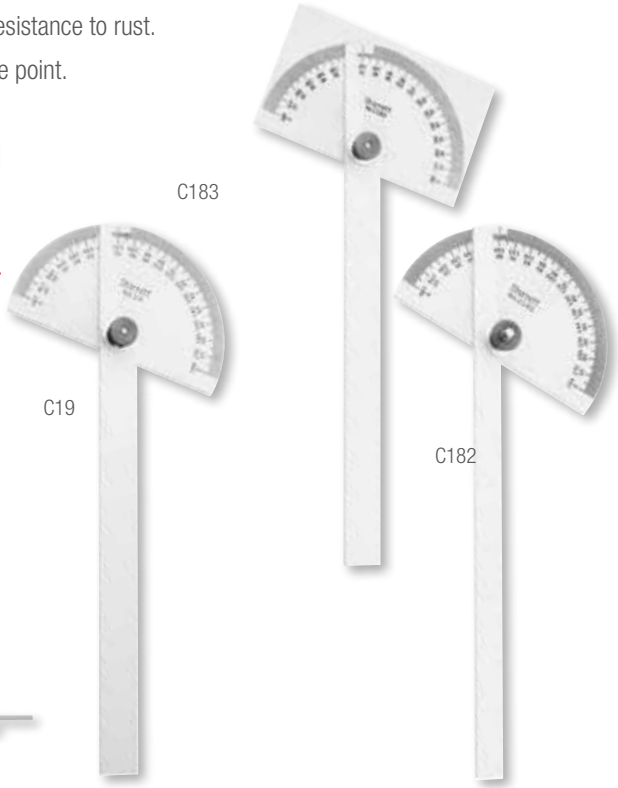

Protractors

193 Steel Protractor

0-180º

This protractor can be used with the 47 Universal Bevel by setting it against the revolving stud, which quickly and economically converts it into a Bevel Protractor. Protractor has double graduations from 0-180º in opposite directions.

Steel Protractor		
Cat. No.	EDP	Range
193	50696	0-180º

193

47 Universal Bevel

6"/150MM

This improved Universal Bevel has both offset and straight slots in the blade, in combination with straight slots in the stock that allow for a wide variety of adjustment and angle settings that are impossible to obtain with many ordinary bevels.

Length of the blade is 6" (150mm), and the stock, 3-1/2" (90mm). The stock lies flat on the work or paper since the head of the clamping bolt is recessed. This tool can be set to duplicate an angle from a master, or it may be easily converted into a Bevel Protractor by using this tool with the 193 Protractor.

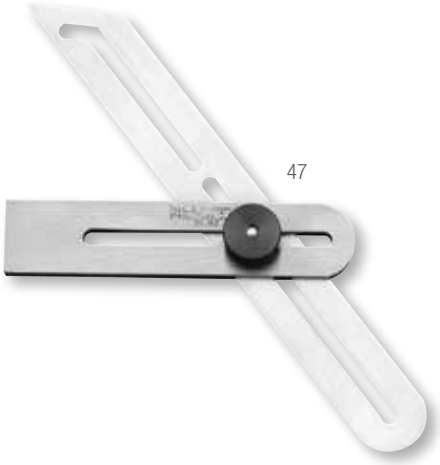

47

Universal Bevel		
Cat. No.	EDP	Blade Length
47	50266	6"

Special Dial Protractor Heads

We make dial protractor heads for special applications that permit rapid angular measurements over a 90º range, in increments of 5 minutes.

These special tools are similar to AGD Group-2 Dial Indicators. They have a rear-mounted rotary input shaft attached to a movable arm that measures the angle in relation to a fixed arm.

They are available with continuous or balanced dials and with clockwise or counterclockwise reading.

(See our Special Gage section for more information.)

Protractors

493 Protractor and Depth Gages

0-180º

The ability to measure angles and depths is combined in these convenient tools.

C493

- Angular measurement is from 0-180º in opposite directions allowing the direct reading of angles and supplementary angles
- Depths are measured from a 6" (150mm) blade (our C610N)
- Both tools have a flat surface on the back of the head permitting laying the tool flat on paper or work
- No-glare satin chrome finish
- Semicircular head

C493B

This gage is exactly the same as the C493, except that it has a rectangular protractor head which provides four convenient working edges.

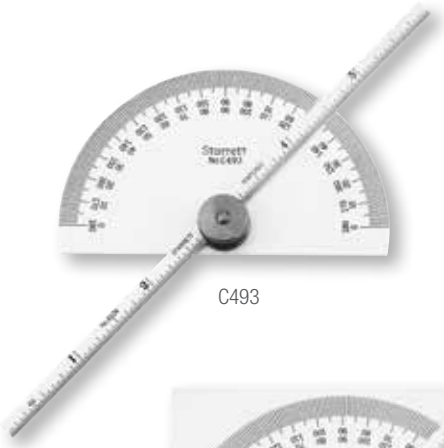

C493

C493B

C493 Protractor and Depth Gages				
Cat. No.	EDP	Blade Length	Blade Graduations	Range
C493	52532	6"	32nds, 64ths	0-180º
C493B	52534			
Replacement Blades				
Cat. No.	EDP	Blade Length		
C610N-6	52696	6"		
C610N-12	67103	12"		

22C Drill Point Gage

59º

This gage was designed specifically for use in drill grinding. It provides a quick, accurate way for determining the correct drill point angle of 59º and the correct length of drill lips necessary for clean-cut drilling at maximum feeds and speeds.

- The sliding head may be adjusted to any position along the rule and locked by a thumb nut
- The head is beveled to 59º (the correct drill point angle), and is also graduated in 32nds along the 59º face for measuring the drill lips which should be of equal lengths
- The hook rule has accurate, machine-divided graduations in 8ths, 16ths, quick-reading 32nds and 64ths
- Hook is adjustable and can be shortened or extended on either side of the rule, and may also be removed if desired
- Tool can also be used as a Plain Rule, Hook Rule, Depth Gage, and Slide Caliper
- Will handle up to a 2" diameter drill

22C Drill Point Gage					
		Head		Hook Rule	
Cat. No.	EDP	Bevel	Graduations	Length	Graduations
22C	50150	59º	32nds	6"	8ths, 16ths; Quick-Reading 32nds, 64ths

22C

Bevel Protractors

490, 491 Reversible Bevel Protractors

0-180º

12 Non-reversible Bevel Protractors

0-180º

Close-up of spirit level on back side of protractor

Readability Features

- Starrett satin chrome blades and protractor heads for easier reading are available (on 12" sizes)
- Direct reading 0-180º in opposite directions, permitting the direct reading of angles and supplementary angles

Ease-of-Handling Features

- Reversible lock bolt allows choice of which graduated side of the blade faces the operator
- The 12 is non-reversible, meaning the blade is on the outside of the frame, so the frame stays on the same side of the workpiece
- The 490 and 491 are reversible, meaning there is a shoulder on both sides of the blade, allowing the tool to be reversed so the same angle can be scribed or measured left and right

Long-Life and Accuracy Features

- Protractor heads are made of stable cast iron and finished with a choice of attractive black wrinkle finish or smooth black finish
- Tempered steel blades with accurate, photo-engraved graduations
- A spirit level indicates when the base reference surface is level – a feature not usually available on comparable protractors

C490-12-4R reversible bevel protractor with black wrinkle finish

C12-12-4R non-reversible bevel protractor with smooth finish

Bevel Protractors

Reversible Black Wrinkle Finish Cat. No.	EDP	Reversible Black Smooth Finish Cat. No.	EDP	Non-reversible Black Wrinkle Finish Cat. No.	EDP	Size	Blade Finish	Graduation
C491-12-4R	64602	C490-12-4R	52514	C12-12-4R C12-12-4R W/SLC*	64290 66931	12"	Satin Chrome	4R: 8ths, 16ths, Quick Reading, 32nds, 64ths
491-12-4R	52521	490-12-4R	52511	12-12-4R	50103	12"	Regular	4R: 8ths, 16ths, Quick Reading, 32nds, 64ths
491-18-4R	52522	490-18-4R	52512	12-18-4R	50104	18"	Regular	4R: 8ths, 16ths, Quick Reading, 32nds, 64ths
491-24-4R	52523	490-24-4R	52513	12-24-4R	50105	24"	Regular	4R: 8ths, 16ths, Quick Reading, 32nds, 64ths
491ME-300	52524			12ME-300	50106	300mm and 11-3/4"	Regular	1/2mm and 32nds one side; mm and 64ths, reverse side

Since the protractor heads and blades are furnished with combination square sets, individual protractor heads or blades can be ordered separately. See the Squares section for information and catalog numbers.
* Includes redemption card for Standard Letter of Certification (SLC).

CALIPERS, DIVIDERS AND TRAMMELS

Spring-Type Calipers

274, 275, 277 Toolmakers' Spring-Type Calipers and Dividers with Round Legs and Solid Nut

3, 6"/75, 150MM

Toolmakers' Calipers and Dividers are the finest tools of their type. Designed for toolmakers and all good mechanics who require finer adjustment and better balance so a more sensitive "feel" can be obtained. Precision made to rigid Starrett standards throughout.

The fulcrum stud is hardened and the bearing surfaces of the legs are large enough to prevent any side deflection. The bow spring is strong and flexible, and the adjustment is centrally located in the legs to assure smooth action.

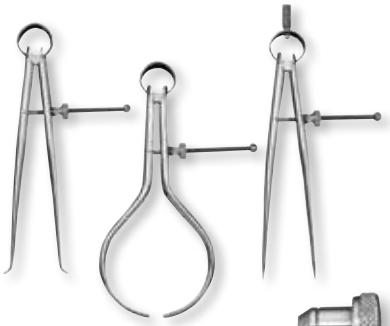

274, 275, 277 Calipers

Quick-adjusting spring nut

274, 275, 277 Toolmakers' Spring-Type Calipers and Dividers*							
Inside Calipers		Outside Calipers		Dividers		Size and Approx. Capacity	
Cat. No.	EDP	Cat. No.	EDP	Cat. No.	EDP	in	mm
274-3	51301	275-3	51305	277-3	51309	3	75
274-6	51303	275-6	51307	277-6	51311	6	150

*Not available with spring nut

73, 79, 83 "Yankee" Spring-Type Calipers and Dividers with Flat Legs and Quick-Spring or Solid Nut

4, 6, 8, 12"/100, 150, 200, 300MM

"Yankee" Calipers and Dividers are made from a high-grade steel and well-finished. The legs are made of flat stock and are very durable. The fulcrum stud is hardened and has a smooth bearing surface. The bow spring, although flexible, is exceedingly strong to assure reliability.

All sizes are available with either spring nut or solid nut. The Starrett quick-adjusting automatic-closing spring nut is designed for making fast, positive adjustments. The threads of the nut firmly engage the screw at the slightest pressure from the leg. When the pressure is withdrawn, the nut automatically releases itself, sliding freely over the screw. This feature saves time in opening and closing.

73, 79, 83 Calipers

73 "Yankee" Spring-Type Inside Calipers					
Solid Nut		Quick-Spring Nut		Size and Approx. Capacity	
Cat. No.	EDP	Cat. No.	EDP	in	mm
73A-4	50334	73B-4	50335	4	100
73A-6	50336	73B-6	50337	6	150
73A-8	50338	73B-8	50339	8	200
73A-12	50342	73B-12	50343	12	300
79 "Yankee" Spring-Type Outside Calipers					
Solid Nut		Quick-Spring Nut		Size and Approx. Capacity	
Cat. No.	EDP	Cat. No.	EDP	in	mm
79A-4	50364	79B-4	50365	4	100
79A-6	50366	79B-6	50367	6	150
79A-8	50368	79B-8	50369	8	200
79A-12	50372	79B-12	50373	12	300
83 "Yankee" Spring-Type Dividers					
Solid Nut		Quick-Spring Nut		Size and Approx. Capacity	
Cat. No.	EDP	Cat. No.	EDP	in	mm
83A-4	50376	83B-4	50377	4	100
83A-6	50378	83B-6	50379	6	150
83A-8	50380	83B-8	50381	8	200
83A-12	50384	83B-12	50385	12	300

Hermaphrodite Calipers

243 Firm-Joint Hermaphrodite Calipers

6"/150MM

This caliper features a round, adjustable leg and an improved firm-joint, which allows the joint to be adjusted at any tension. The leg that holds the adjustable point is offset.

563 Firm-Joint Hermaphrodite Calipers

6"/150MM

This caliper has a round, adjustable point held by a straight leg. An improved, firm-joint feature permits the joint to be adjusted at any desired tension.

42 Lock-Joint Hermaphrodite Calipers with Fine-Adjustment

6, 8"/150, 200MM

These calipers have an adjustable point, locking joint and fine-adjustment feature for close measurements. After the legs have been set to approximate size and the joint locked, the final adjustment is made by a few turns of the knurled adjusting nut.

Hermaphrodite Calipers

Starrett Hermaphrodite Calipers are used in layout work for locating and testing centers, laying out distances from an edge, etc.

We offer a complete choice from which machinists and toolmakers can select to best suit their requirements.

The rugged, properly shaped legs are made of finely finished, high-grade steel.

Sizes listed are the lengths of the legs.

Actual measuring capacity is approximately one-third greater than the leg size.

243 and 563 Firm-Joint Hermaphrodite Calipers			
		Size*	
Cat. No.	EDP	in	mm
243-6	51143	6	150
563-6	52572		

42 Lock-Joint Hermaphrodite Calipers			
		Size*	
Cat. No.	EDP	in	mm
42-6	50263	6	150
42-8	50264	8	200

* Actual capacity is one-third greater than the listed size.

243-6

563-6

42-6

Firm and Lock-Joint Calipers

Improved Firm-Joint Calipers

26 (Outside)

6-36"/150-900MM

27 (Inside)

6-24"/150-600MM

- Improved joint designed for tension adjustment
- Tension will not change with leg movement
- Legs are made from a high-grade steel, are ruggedly constructed and well-finished

Lock-Joint Calipers with Fine-Adjustment

38 (Outside) and 39 (Inside)

6-24"/150-600MM

- Joint can be quickly and firmly locked by a partial turn of the large knurled disc
- Spring washer under the disc maintains proper leg tension when joint is unlocked
- Provided with an adjusting screw to permit fine-adjustments for close measurements
- Once legs have been set to approximate size and joint locked, final adjustment is made by a few turns of the knurled adjusting nut
- Legs are made of well shaped high-grade steel and are ruggedly constructed and nicely finished

Lock-Joint Transfer Type Calipers with Fine-Adjustment

36 (Outside) and 37 (Inside)

6-24"/150-600MM

One of the handiest and most versatile calipers ever made, Starrett Lock-Joint Transfer Calipers feature a transfer arm, a fine-adjustment screw, and a locking joint.

- Transfer arm allows transfer measurements from places where it is necessary to move the legs after they have been set to size
- Adjusting screw permits close adjustment for fine measurements
- Once legs have been set to approximate size and the joint locked, final adjustment is made with a few turns of the knurled adjusting nut
- Joint can be quickly and firmly locked by a partial turn of the large knurled disc
- Spring washer under the disc maintains proper tension of legs when joint is loosened
- Ruggedly constructed legs from high-grade steel and are well-shaped and nicely finished

Firm and Lock-Joint Calipers

26 Outside Calipers		27 Inside Calipers		36 Outside Calipers		37 Inside Calipers		38 Outside Calipers		39 Inside Calipers		Size*	
Cat. No.	EDP	Cat. No.	EDP	Cat. No.	EDP	Cat. No.	EDP	Cat. No.	EDP	Cat. No.	EDP	in	mm
26-6	50186	27-6	50193	36-6	50245	37-6	50249	38-6	50253	39-6	50257	6	150
26-12	50189	27-12	50196	36-12	50246	37-12	50250	38-12	50254	39-12	50258	12	300
26-18	50190	27-18	50197									18	450
26-24	50191	27-24	50198	36-24	50248	37-24	50252	38-24	50256	39-24	50260	24	600
26-36	50192											36	900

* Actual capacity is one-third greater than the listed size.

Trammel Heads

59 Trammel Heads, Divider Points, Attachments

The 59 Trammel Head is very useful for laying out and scribing circles beyond the capacity of ordinary dividers. The trammel heads have a clamping device that firmly holds various attachments.

The attachments consist of two sizes of caliper legs, 6", 9-1/2" (150, 238mm), two sizes of divider points 6", 9" (150, 225mm) which are eccentric for close settings, and a set of four ball points with holder. The ball points with 6" (150mm) holder are for scribing circles from the center of any hole up to 1-1/2" (38 mm) in diameter. One of the large caliper legs features a joint operated by an eccentric thumb piece for fine adjustments. A pencil may be clamped in either head in place of the caliper legs or divider points.

The heads will accommodate any size beam from 3/4 – 1-1/2" (19-38mm) in width. Since beam length requirements vary widely, and they are easy for the user to fashion, we do not furnish a beam.

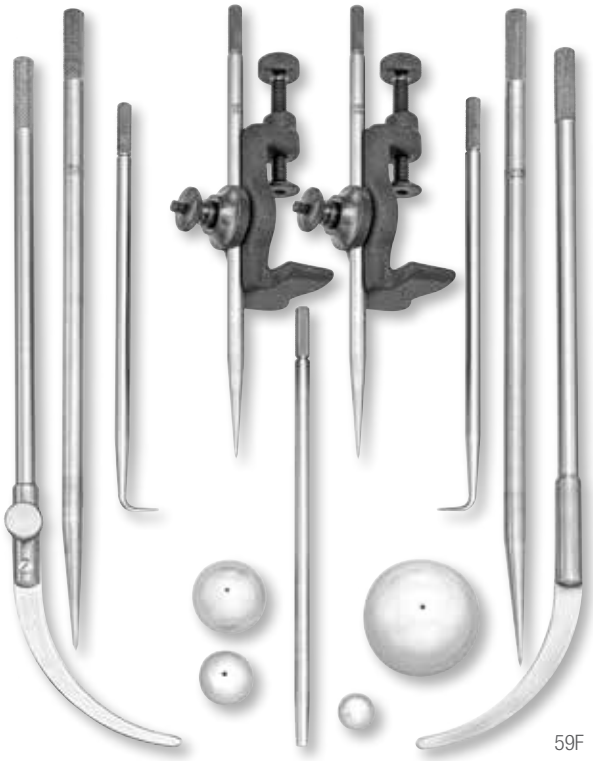

59F

50A

50 Improved Trammel Heads with Divider Points, Pencil Socket

Used to measure the distance between points that are too great to be reached with dividers. The heads are die cast with black wrinkle finish and have hardened, forged steel divider points. The points screw into the heads, and the pencil socket accompanying each set of trammel heads can be used in place of either point. 50A has an adjustable point. Longer points (5"/125mm) are also available. A beam is not furnished with these trammels. The heads will accommodate a beam up to 3/8" (9.5mm) thick and 3/4" (19mm) wide.

50 Improved Trammel Heads				
		Point Size		
Cat. No.	EDP	in	mm	Description
50A	50268	3, 2-1/2	75, 63	(adjustable) Includes 2 heads, 2 points, pencil socket
50B	50269	3	75	Includes 2 heads, 2 points, pencil socket
50 (Longer) Points Only				
		Point Size		
Cat. No.	EDP	in	mm	Description
50CA	50270	5, 4-1/2	125, 113	2 adjustable points for Starrett 50A
50CB	50271	5	125	2 points for Starrett 50B

59 Trammel Heads, Divider Points, Attachments		
Cat. No.	EDP	Description
59A	50297	2 trammel heads, 2 small points (6"/150mm)
59B	*	Set of 4 ball points and one holder only
59C	*	Pair small caliper legs only (6"/150mm)
59D	*	Pair large caliper legs only (9-1/2"/228mm)
59E	50301	Large points only (9"/225mm)
59F	50302	Complete Set: 59A, B, C, D, E

* 59B, 59C and 59D sold only as part of 59F set.

Dividers

85 Extension Dividers with Caliper Legs

Exceptionally rigid although light in weight and easy to handle. The head is made of forged steel.

Features

- The hardened points are bent slightly so they can be rotated and brought closer together if desired
- Sturdy construction of the joint eliminates side deflection of the legs
- Quadrant adjusting nut allows fine-adjustments for close measurements

With Divider - Legs Only		Complete with Divider Legs, Inside and Outside Legs		Size*	
Cat. No.	EDP	Cat. No.	EDP	in	mm
85A	50398	85C	50400	7	175
85B	50399	85D	50401	9	225
85E	50402	85F	50403	12	300

85C

92-6

92 Carpenters' Dividers

These dividers combine rigidity, light weight and easy handling. The legs are forged steel, well-shaped, properly tempered and highly polished. The adjustable point may be quickly removed and a common pencil inserted in its place.

Features

- Sturdy construction of the joint eliminates side deflection of the legs
- Quadrant adjusting nut allows fine-adjustments for close measurements
- Check nut located between the legs locks the legs in place

Cat. No.	EDP	Size* in	mm
92-6	50423	6	150
92-9	50426	9	225

*Actual capacity is one-third greater than the listed size.

Steel Beam Trammels

C251 Steel Beam Trammels and Attachments

10-1/2 – 20"/260 - 500MM BEAMS

A rigid, well-designed trammel for layout, scribing, and measuring distances and circles. The top of the beam is flattened so that when the trams are clamped in position, they will not turn from pressure on the points. The trams are held in place by spring friction, which prevents them from sliding when the nuts are loosened for setting. One tram has a fine-adjusting screw for the points.

Each tram has a knurled swivel grip at the top that turns freely, making it very convenient to swing the tool when scribing circles. The 3" (75mm) points may be adjusted for length in the spring chucks and can be easily replaced with caliper legs or other attachments listed. The ball points with 3" (75mm) holder permit working from holes up to 1-1/2" (38mm) in diameter. A pair of 3" (75mm) caliper points is included with each trammel.

- Ideal for draftsmen, engineers, metal-workers for layout work, scribing and measuring
- Furnished with rigid steel beam – 10-1/2" (263mm), 14-1/2" (360mm) or 20" (500mm) sizes
- Bright chrome finish for longer life, resistance to corrosion
- Highly versatile – handy attachments available to extend range and measure

C251 Steel Beam Trammels

		Max. Dividing Range		Max. Circle Scribing Diameter Range		Beam Size	
Cat. No.	EDP	in	mm	in	mm	in	mm
C251A	51205	9	225	18	450	10-1/2	263
C251B	51207	13-1/2	338	26	650	14-1/2	363
C251C	51209	18	450	36	900	20	500

C251 Trammel Individual Attachments Only

Photo Key	Cat. No.	EDP	Description
D	C251D	51211	Coupling, with extra 20" (600mm) beam (when used with C251C will scribe circle 72" [1800mm] diameter)
E	C251E	51212	Ball points and holder
H	C251H	51214	Steel point and socket (one) (has .076" [1.9mm] hole diameter to hold leads)
J	251J	51203	Needle point (chrome not available) (one)

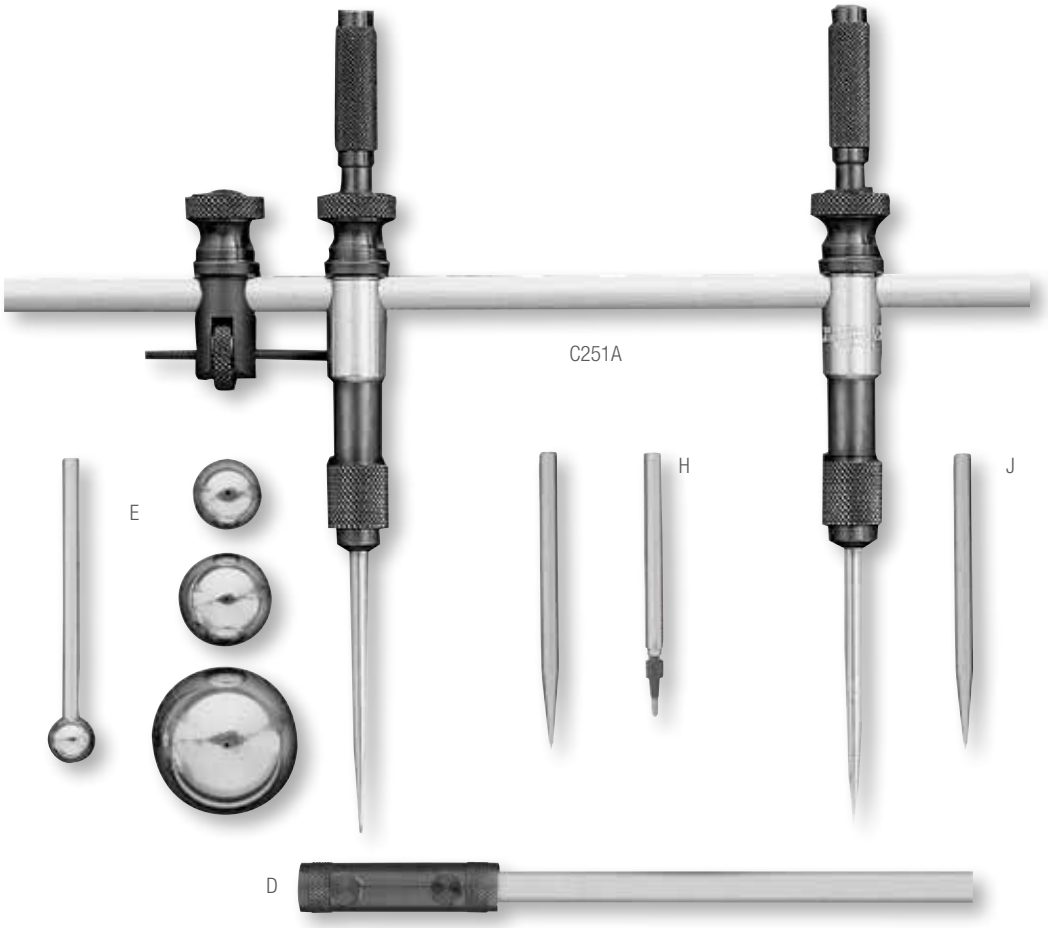

FOR OVER 130 YEARS, WITH INNOVATIVE TECHNOLOGIES.

More than 5,000 products including precision tools, vision systems, force measurement systems, non-contact measurement systems, profile projectors, band saw blades, band saw machines, hand tools and power tools accessories.

Read more: www.starrett.com

Starrett®

(978) 249-3551 • starrett.com

Follow us!

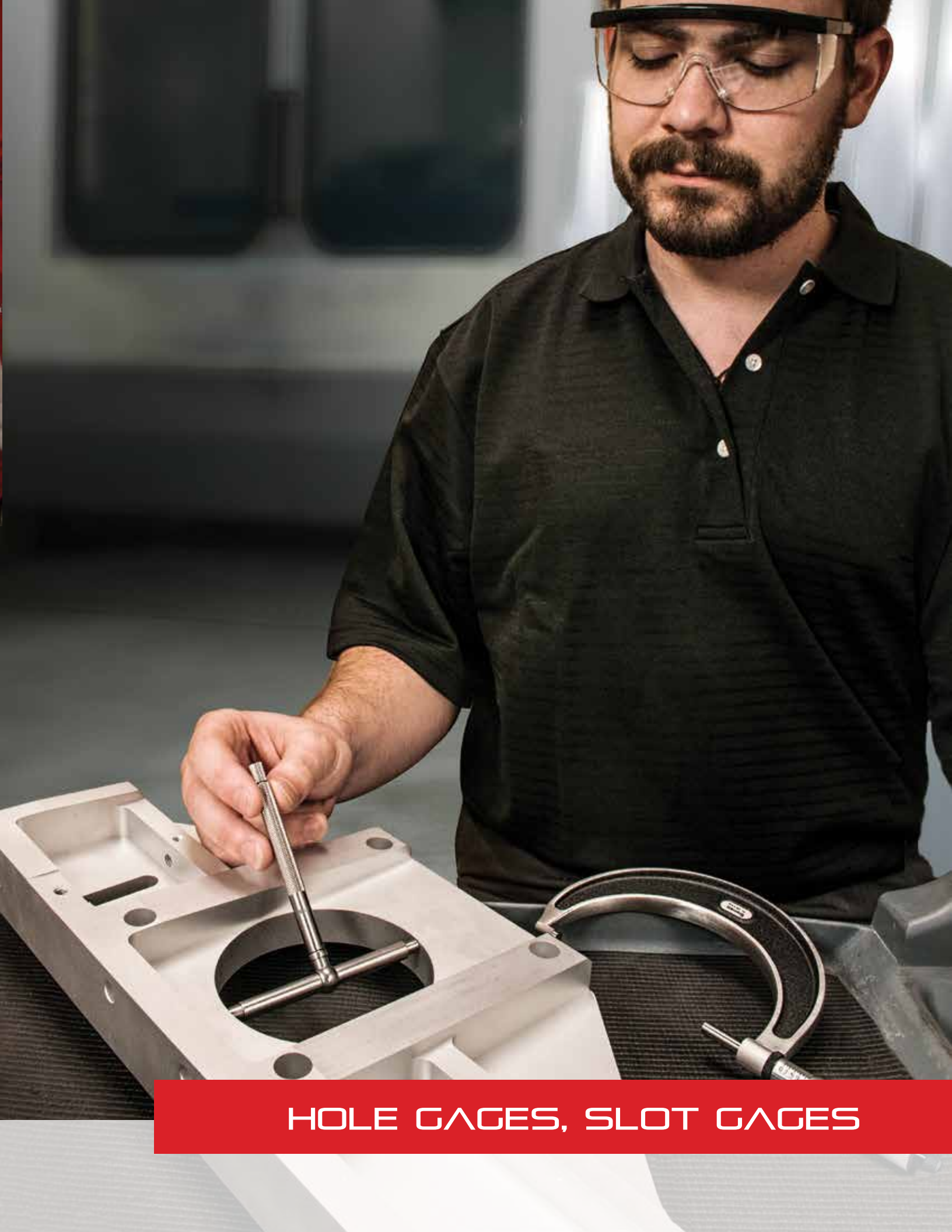

HOLE GAGES, SLOT GAGES

Small Hole Gages

829 Small Hole Gages

.125-.500"/3.2-12.7MM

These full-ball gages are used for general work.

829 Small Hole Gages					
		Range		Approx. Length	
Cat. No.	EDP	in	mm	in	mm
829A	53070	.125-.200	3.2-5.1	2-7/8	75
829B	53071	.200-.300	5.1-7.6	3	80
829C	53072	.300-.400	7.6-10.2	3-3/8	85
829D	53073	.400-.500	10.2-12.7	3-1/2	90

829 Small Hole Gage Sets		
Cat. No.	EDP	Description
S829EZ	53074	Set of 4 in case

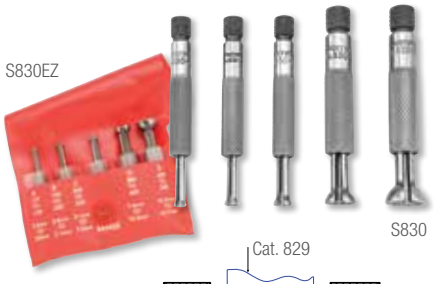

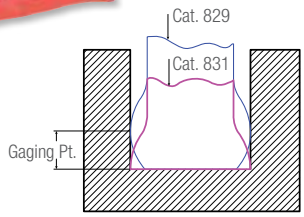

830 Small Hole Gages

.125-.500"/3.2-12.7MM

These gages are exactly the same as the 831 Small Hole Gage except that all gages are only 2" (50mm) long, making them convenient to use in close quarters.

830 Small Hole Gages					
		Range		Approx. Length	
Cat. No.	EDP	in	mm	in	mm
830A	53076	.125-.150	3.2-3.8		
830B	53077	.150-.200	3.8-5.1		
830C	53078	.200-.300	5.1-7.6	2	50
830D	53079	.300-.400	7.6-10.2		
830E	53080	.400-.500	10.2-12.7		

830 Small Hole Gage Sets		
Cat. No.	EDP	Description
S830FZ	53081	Set of 5 in case

831 Small Hole Gages

.125-.500"/3.2-12.7MM

These gages are exactly the same as the 829 Hole Gage except that the gaging surface is a half-ball with a flat bottom. This permits use in even the most shallow holes, slots, and recesses.

831 Small Hole Gages					
		Range		Approx. Length	
Cat. No.	EDP	in	mm	in	mm
831A	53083	.125-.200	3.2-5.1	2-13/16	70
831B	53084	.200-.300	5.1-7.6	3-1/8	80
831C	53085	.300-.400	7.6-10.2	3-3/8	85
831D	53086	.400-.500	10.2-12.7	3-1/2	90

831 Small Hole Gage Sets		
Cat. No.	EDP	Description
S831EZ	53087	Set of 4 in case

Small Hole Gages

These small hole gages are well balanced tools that are ideal for accurately measuring small holes, slots, grooves, and recesses in all kinds of work. They all feature:

- Hardened-ball measuring surface with two-point contact
- Radius on each gage is less than the minimum diameter to be measured, which provides the two-point contact necessary for maximum accuracy
- Smooth, sensitive adjustment for better feel, giving more accurate measurements
- The adjustment of the gage beyond their range is restricted by a safety stop that prevents breakage

Accurate measurements are obtained by slightly "rocking" these gages in the hole to be measured. This will guarantee contact at the true diameter. The final size is then obtained by measuring over the ball contacts with a micrometer.

Telescoping Gages

229 Telescoping Gages with One Telescoping Arm

1/2-6"/13-150MM

- Features a handle, one rigid contact arm and one spring-tensioned telescoping contact arm

229 Telescoping Gages					
		Range		Handle Length	
Cat. No.	EDP	in	mm	in	mm
229A	50923	1/2 – 3/4	13-19	2-3/8	60
229B	50924	3/4 – 1-1/4	19-32		
229C	50925	1-1/4 – 2-1/8	32-54		
229D	50926	2-1/8 – 3-1/2	54-89		
229E	50927	3-1/2 – 6	89-150	3-1/4	82

229 Telescoping Gage Sets		
Cat. No.	EDP	Description
S229FZ	50928	Set of 3, 229A, B, C in case
S229GZ	50929	Set of 5, 229A, B, C, D, E in case

Handles can be individually ordered and/or ordered in larger sizes such as 8", 12" or longer, similar to 579 Telescoping Gage listing, upon request.

Handles can be individually ordered and/or ordered in larger sizes such as 8", 12" or longer, similar to 579 Telescoping Gage listing, upon request.

Telescoping Gages

Starrett telescoping gages are used for determining the true size of holes, slots, and recesses up to 6" (150mm). The ends of both contacts are hardened and ground to a radius to allow proper clearance on the smallest hole the gage will enter. These tools must be slightly "rocked" in the hole being measured to ensure that the tool is on the proper diameter before it is locked and withdrawn. The final hole size is obtained by measuring over the gage contacts with a micrometer.

Telescoping Gages

579 Self-Centering Telescoping Gages with Two Telescoping Arms

5/16-6"/8-150MM

- Similar to the 229 Telescoping Gage with a slightly greater range and two telescoping contacts
- Handles are rigidly attached to the contact plungers and are automatically self-centering
- Constant spring tension gives uniform contact pressure
- Both plungers are easily locked at any desired setting

579 Telescoping Gages

Cat. No.	EDP	Range in	Range mm	Handle Length in	Handle Length mm
579A	52610			2-3/8	60
579A-8	63192	5/16 – 1/2	8-13	8	200
579A-12	63195			12	300
579B	52611			2-3/8	60
579B-8	63193	1/2 – 3/4	13-19	8	200
579B-12	63196			12	300
579C	52612			2-3/8	60
579C-8	63194	3/4 – 1-1/4	19-32	8	200
579C-12	63197			12	300
579D	52613			2-3/8	60
579D-8	67114	1-1/4 – 2-1/8	32-54	8	200
579D-12	63198			12	300
579E	52614			2-3/8	60
579E-8	67115	2-1/8 – 3-1/2	54-89	8	200
579E-12	63199			12	300
579F	52615			3-1/4	82
579F-8	67116	3-1/2 – 6	89-150	8	200
579F-12	63200			12	300

579 Telescoping Gage Sets

Cat. No.	EDP	Description
S579GZ	52616	Set of 4, 579A, B, C, D in case
S579HZ	52617	Set of 6, 579A, B, C, D, E, F in case

Handles can be individually ordered. Handles longer than 12" (300mm) are available on special order.

S579

S579GZ

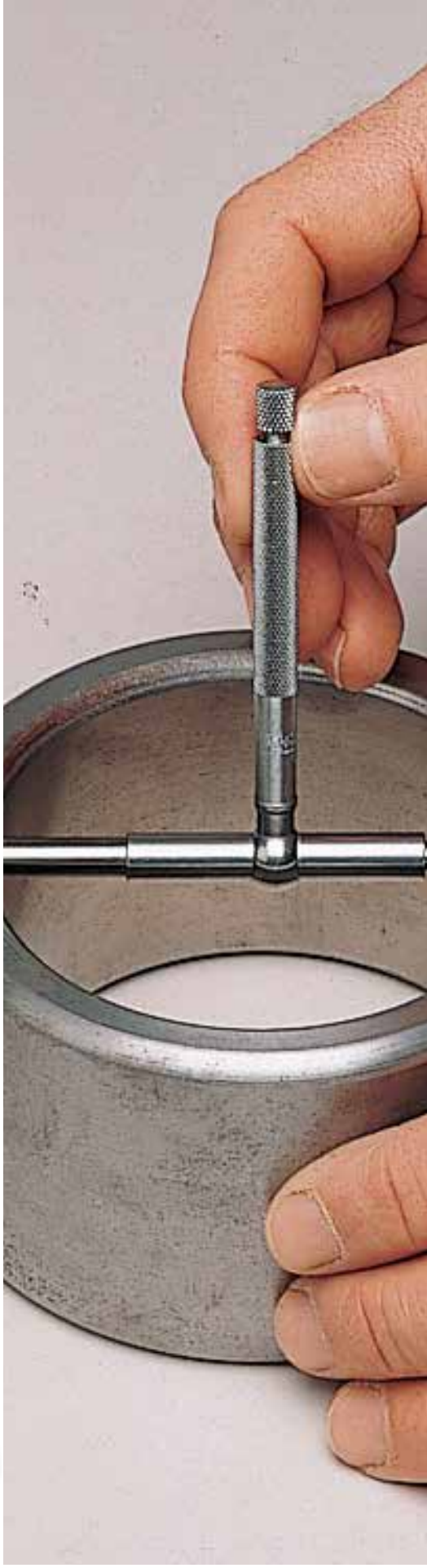

Taper Gages

267 Taper Gage

1/16 – 1-1/16"

- Specially designed for rapid, accurate checking of inside diameters of tubing
- Also very useful for general gaging of slot widths, hole sizes, setting calipers, etc.
- Thin, tapered leaves graduated to measure inside diameters or widths from 1/16" to 1-1/16" in 64ths of an inch
- Nicely finished spring-tempered steel, approximately 1" wide by 5-1/4" long

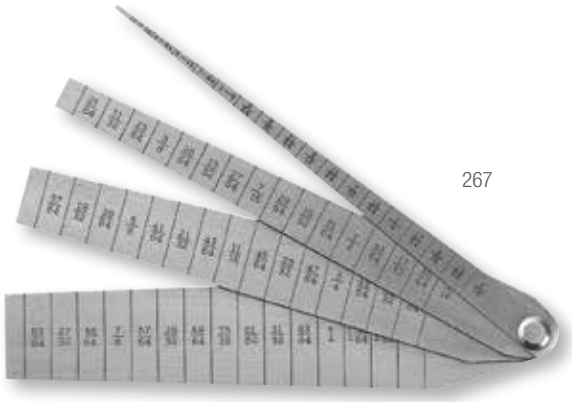

267

267 Taper Gage		
Cat. No.	EDP	Description
267	51286	Taper Gage, 1/16 – 1-1/16" range

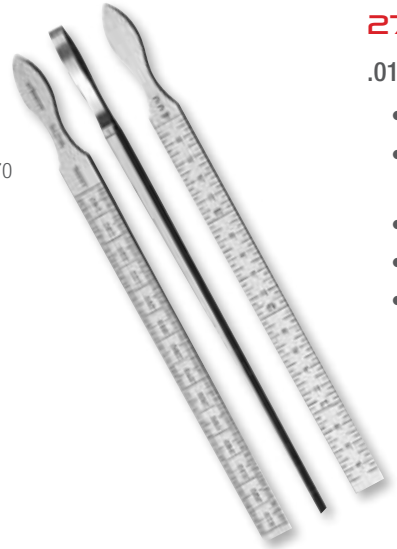

270

270 Taper Gage

.010-.150"/0.3-4MM

- Very useful tool, especially for bearing work and for gaging slots
- Made of quality tool steel and accurately tapered throughout entire length for quick and convenient measuring
- 7/16" (11mm) wide by 6-1/4" (160mm) long
- Can be used as a precision shim
- One side graduated from .010" to .150" in thousandths of an inch; the reverse side from 0.3mm to 4mm in one-twentieth of a mm (0.05mm)

270 Taper Gage		
Cat. No.	EDP	Description
270	51292	Taper Gage, .010-.150" (0.3-4mm) range

269, 269M Taper Gages

.100-1"/2-25MM

- These gages are for determining hole sizes in dies and all kinds of other work
- Read in thousandths of an inch or 0.02mm
- Made of tempered steel with a locking device for fixing any leaf in position for use

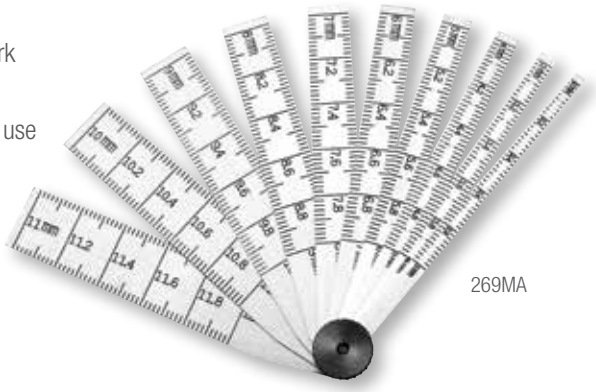

269MA

269 Taper Gages - .001" Graduation				
Cat. No.	EDP	Range	Length	Leaves
269A	51290	.100-.500"	2-1/2"	8
269B	51291	.500-1"	2-3/4"	10
269M Taper Gages - 0.02mm Graduation				
Cat. No.	EDP	Range	Length	Leaves
269MA	56031	2-12mm	64mm	10
269MB	56032	12-25mm	70mm	13

Taper Gages

These are named "taper" gages only because of their shape. They do not measure taper, but they do measure hole and slot sizes. They are quick to use, very accurate, and are a convenient size.

PRECISION MAKES THE DIFFERENCE

YOUR NAME DEPENDS ON OURS

The CP505E-12 Electronic Protractor is accurate, versatile and easy to use. It eliminates errors from a variety of jobs including complex crown molding work.

Starrett®

(978) 249-3551 • starrett.com

Follow us!

FIXED GAGE STANDARDS

Gage Sets

S4000 Precision Steel Pin Gage Sets

.011-1.000"

Precision gage pins are used to determine small hole sizes, for gaging slots, and finding hole distances.

Features

- Color coded, fully adjustable Go/No-Go gage handle furnished with each set
- Sets are supplied in rugged, high impact protective cases with each space marked for the appropriate gage
- Inspection certificate with every set
- All Starrett pin gages are manufactured to a 0.0002" tolerance
- Plus and minus tolerance sets
  - A plus tolerance gage would be e.g.; gage pin size as labelled + 0.0002" - 0.0"
  - A minus tolerance gage would be the gage pin size as labelled -0.0002" + 0.0
- Offered in 0.001" increments
- Each pin is centerless lapped and is clearly etched with the stated size
- All gages are 2 inches long and hardened to RC 60/64
- All sharp corners are broken

S4000 Pin Gages - Plus Sets			
Cat. No.	**EDP**	**Range**	**No. of Gages**
S4000-060	67480	.011-.060" (+)	50
S4002-250	67482	.061-.250" (+)	190
S4004-500	67484	.251-.500" (+)	250
S4006-625	67486	.501-.625" (+)	125
S4008-750	67488	.626-.750" (+)	125
S4010-832	67490	.751-.832" (+)	82
S4012-916	67492	.833-.916" (+)	84
S4014-1	67494	.917-1.000" (+)	84
S4000 Pin Gages - Minus Sets			
Cat. No.	**EDP**	**Range**	**No. of Gages**
S4001-060	67481	.011-.060" (-)	50
S4003-250	67483	.061-.250" (-)	190
S4005-500	67485	.251-.500" (-)	250
S4007-625	67487	.501-.625" (-)	125
S4009-750	67489	.626-.750" (-)	125
S4011-832	67491	.751-.832" (-)	82
S4013-916	67493	.833-.916" (-)	84
S4015-1	67495	.917-1.000" (-)	84

Handles for 4000 Pin Gages		
Cat. No.	**EDP**	**Description**
PT45065	45060	Handle for .011-.060" Pin Gages
PT45250	45250	Handle for .061-.250" Pin Gages
PT45500	45500	Handle for .251-.500" Pin Gages
PT45625	45625	Handle for .501-.625" Pin Gages
PT45750	45750	Handle for .626-.750" Pin Gages
PT45832	45832	Handle for .751-.832" Pin Gages
PT45916	45916	Handle for .833-.916" Pin Gages
PT45066	45001	Handle for .917-1.000" Pin Gages

Go/No-Go Gage

S4002-250 190, piece set

Hardened Drill and Wire Gages

185 Time Saver® Tap and Drill Gage

NOS. 1-60/.228-.040"

- Correct sizing of tap drill for any common size machine screw tap in "NF" National Fine or "NC" National Coarse Thread
- Leaves the right amount of stock for approximately 65% full thread
- Shows correct drill body size
- 60 holes with number sizes and decimal equivalents
- Black matte finish with information steel stamped on one side and white marked on the reverse side for quick, clear reading
- Carefully tested for accuracy after hardening

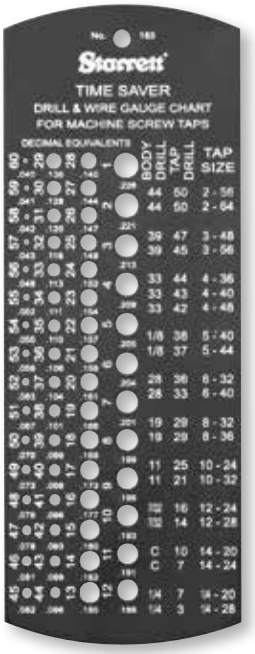

185

185 Time Saver Tap and Drill Gage					
		Range			Dimensions
Cat. No.	EDP	Tap Size	Tap Drill	Body Drill	Thickness x Width x Length
185	50675	2-56 to 1/4-28	50 to 3	44 to 1/4	5/64" x 2-5/16" x 6-1/4"

186 Drill and Steel Wire Gage

NOS. 1-60/.228-.040"

- Widely used by mechanics for twist drills and steel drill rod
- Similar to 185, without the tap and drill information
- 60 holes from 1 to 60
- Marked with number sizes and decimal equivalents
- Black matte finish with gage information steel stamped on one side and white marked on reverse for quick, clear reading
- Carefully tested for accuracy after hardening

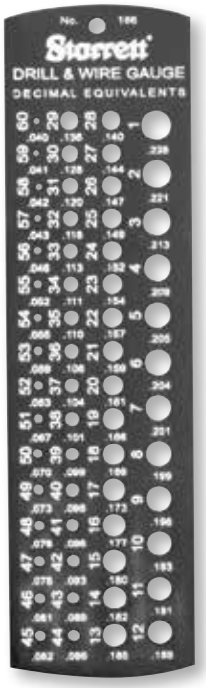

186

Fixed Gages			
		Dimensions	
Cat. No.	EDP	Thickness x Width x Length	Description
186	50676	5/64" x 1-1/2" x 5-1/2"	Drill and Steel Wire Gage

187 Jobbers' Drill Gage

1/16-1/2"

- Quick sizing of any twist drill from 1/16-1/2" by 64ths
- 29 holes marked with drill size in inches and decimal equivalents
- Black matte finish with gage information steel stamped on one side and white marked on reverse for quick, clear reading
- Carefully tested for accuracy after hardening

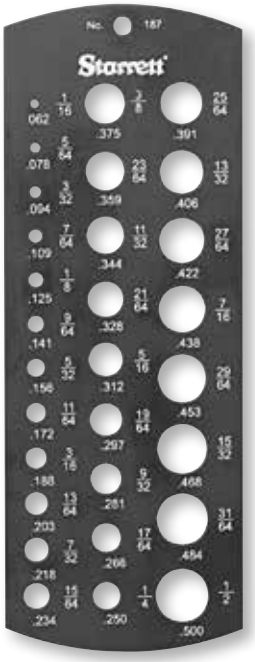

187

Fixed Gages			
		Dimensions	
Cat. No.	EDP	Thickness x Width x Length	Description
187	50677	5/64" x 2-5/16" x 6-1/4"	Jobbers' Drill Gage

198 Standard Letter Size Drill Gage

A-Z
.234-.413" DIA.

- Quick, convenient checking of letter size drills
- Twenty-six holes provided, giving corresponding drill sizes from "A" through "Z" with decimal equivalents from .234" diameter through .413" diameter
- Satin finish
- Carefully tested for accuracy after hardening

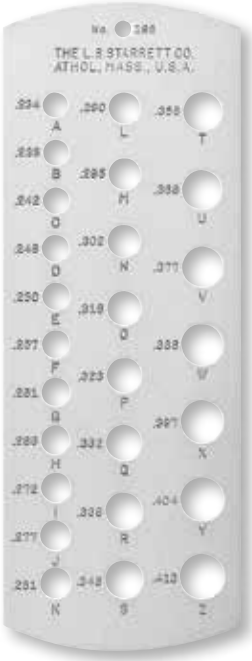

198

Fixed Gages			
		Dimensions	
Cat. No.	EDP	Thickness x Width x Length	Description
198	50718	5/64 " x 2-5/16" x 6-1/4"	Standard Letter Size Drill Gage

Wire and Standard Gages

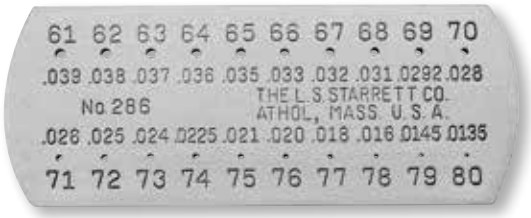

286

286 Drill and Steel Wire Gage

HARDENED
61-80/.039-.0135"

This gage is for selecting the correct size of twist drills and steel drill rod in smaller sizes ranging from 61 to 80. For convenience, each hole is marked with the size number and the corresponding decimal equivalent. Attractive satin finish. Small compact size, approximately 1/16" thick, 3/4" wide and 2" long.

Fixed Gages		
Cat. No.	EDP	Description
286	51320	Drill and Steel Wire Gage

188 English Standard Wire Gage

(BIRMINGHAM OR STUBS' IRON WIRE GAGE)
HARDENED
1-36/.300-.004"

188

This gage is popular for gaging iron wire, hot and cold rolled sheet steel, and in some cases, sheet iron by the English Standard Wire system also known as Birmingham or Stubs.

Gage has convenient decimal equivalents of each number on the reverse side. Satin finish.

Fixed Gages		
Cat. No.	EDP	Description
188	50678	English Standard Wire Gage

281 American Standard Wire Gage

(OR B.&S.) FOR NON-FERROUS METALS
HARDENED
0-36/.325-.005"

281

This gage is the generally accepted standard for non-ferrous metals as adopted by brass manufacturers. It is especially useful for electricians and others to gage sheet, plate and wire made of non-ferrous metals like copper, brass, aluminum, etc. Screw slotting cutters are also made to this gage.

Gage has decimal equivalents on the reverse side. Satin finish.

Fixed Gages		
Cat. No.	EDP	Description
281	51316	American Standard Wire Gage

287 American Steel and Wire Co. Gage

(WASHBURN & MOEN) STANDARD
0-36/.3065-.009"

287

This gage is designed for gaging steel wire and drill rod to the American Steel & Wire Co. (Washburn & Moen) Standard and checks sizes from 0-36. (Also known as United States Steel Wire Gage.) Decimal equivalents are given on the back. Satin finish.

Fixed Gages		
Cat. No.	EDP	Description
287	51321	American Steel and Wire Co. Steel Wire Gage

280 Piano Tuners' Gage

AMERICAN STEEL AND WIRE CO. STANDARD
HARDENED
12-28/.029-.071"

280

The 280 Gage is designed for gaging steel music wire and has a range from 12 to 28. Convenient decimal equivalents on reverse side. Diameter of the gage is 1-9/16" and it has a satin finish.

Fixed Gages		
Cat. No.	EDP	Description
280	51315	Piano Tuners' Gage

283 U.S. Standard Gage

SHEET, PLATE IRON AND STEEL GAGE
HARDENED
0-36/.3125-.007"

283

This gage is made to the United States Standard for uncoated sheet, plate iron and steel, and is based on weights in ounces per square foot. The gage has a satin finish and decimal equivalents on the reverse side.

Fixed Gages		
Cat. No.	EDP	Description
283	51318	U.S. Standard Gage

NOTE: Like other Starrett gages, these tools are carefully tested for accuracy after hardening.

284 Acme Standard Screw Thread Gage

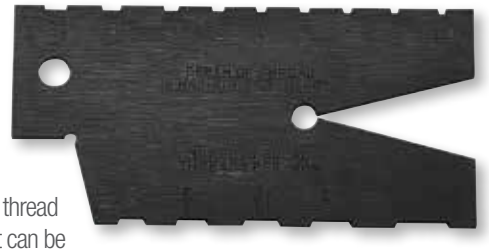

284

HARDENED
29º

This gage is a standard for grinding and setting tools when cutting Acme threads. Acme threads have the same depth as square threads but the sides of the threads are at an inclination of 14-1/2º (29º included angle). This form of thread is used extensively and has in many instances replaced the square thread in machine construction. The advantages of the Acme thread are its strength and the ease by which it can be cut compared with square threads. The angles and edges of this gage are hardened, ground and carefully tested.

In use, the angle on the thread cutting tool is checked on the large precision-ground V at the end of the gage. The tool is then ground on the end to the width of the slot of whatever pitch is being turned. It is then set in the lathe using the half angle.

Fixed Gages		
Cat. No.	EDP	Description
284	51319	Acme Standard Screw Thread Gage

Standards for Sheet and Wire Gages with Corresponding Starrett Gages

Dimensions of Sizes in Decimal Parts of an Inch

No. of Wire Gage	281 American or Brown & Sharpe	188 and 245 Birmingham or Stubs' Iron Wire	287 Washburn & Moen, Worcester, MA*	280 American S. & W. Co's. Music Wire Gage	Stubs' Steel Wire	283 U.S. Standard Gage for Sheet and Plate Iron and Steel
00000000	0.7314					
0000000	0.6514					
000000	0.5800			0.004		0.4688
00000	0.5165			0.005		0.4375
0000	0.46	0.454	0.3938	0.006		0.4063
000	0.4096	0.425	0.3625	0.007		0.375
00	0.3648	0.38	0.331	0.008		0.3438
0	0.3249	0.34	0.3065	0.009		0.3125
1	0.2893	0.3	0.283	0.01	0.227	0.2813
2	0.2576	0.284	0.2625	0.011	0.219	0.2656
3	0.2294	0.259	0.2437	0.012	0.212	0.25
4	0.2043	0.238	0.2253	0.013	0.207	0.2344
5	0.1819	0.22	0.207	0.014	0.204	0.2188
6	0.1620	0.203	0.192	0.016	0.201	0.2031
7	0.1443	0.18	0.177	0.018	0.199	0.1875
8	0.1285	0.165	0.162	0.02	0.197	0.1719
9	0.1144	0.148	0.1483	0.022	0.194	0.1563
10	0.1019	0.134	0.135	0.024	0.191	0.1406
11	0.0907	0.12	0.1205	0.026	0.188	0.125
12	0.0808	0.109	0.1055	0.029	0.185	0.1094
13	0.0720	0.095	0.0915	0.031	0.182	0.0938
14	0.0641	0.083	0.08	0.033	0.18	0.0781
15	0.0571	0.072	0.072	0.035	0.178	0.0703
16	0.0508	0.065	0.0625	0.037	0.175	0.0625
17	0.0453	0.058	0.054	0.039	0.172	0.0563
18	0.0403	0.049	0.0475	0.041	0.168	0.05
19	0.0359	0.042	0.041	0.043	0.164	0.0438
20	0.0320	0.035	0.0348	0.045	0.161	0.0375
21	0.0285	0.032	0.0318	0.047	0.157	0.0344
22	0.0253	0.028	0.0286	0.049	0.155	0.0313
23	0.0226	0.025	0.0258	0.051	0.153	0.0281
24	0.0201	0.022	0.023	0.055	0.151	0.025
25	0.0179	0.02	0.0204	0.059	0.148	0.0219
26	0.0159	0.018	0.0181	0.063	0.146	0.0188
27	0.0142	0.016	0.0173	0.067	0.143	0.0172
28	0.0126	0.014	0.0162	0.071	0.139	0.0156
29	0.0113	0.013	0.015	0.075	0.134	0.0141
30	0.0100	0.012	0.014	0.08	0.127	0.0125
31	0.0089	0.01	0.0132	0.085	0.12	0.0109
32	0.0080	0.009	0.0128	0.09	0.115	0.0102
33	0.0071	0.008	0.0118	0.095	0.112	0.0094
34	0.0063	0.007	0.0104		0.11	0.0086
35	0.0056	0.005	0.0095		0.108	0.0078
36	0.005	0.004	0.009		0.106	0.0070
37	0.0045				0.103	0.0066
38	0.0040				0.101	0.0063
39	0.0035				0.099	
40	0.0031				0.097	

* Also called the U.S. Steel Wire Gage

Wire and Standard Gages

178, 178M Fillet or Radius Gages with Locking Device

1/32-1/2"/1-15MM

These gages are very useful for tool and diemakers, machinists, screw machine operators, patternmakers and other mechanics to lay out and check radii of tools, dies, patterns, etc.

Made in two English and metric sizes as listed below, each gage has leaves for measuring both concave and convex radii, with each leaf stamped with the radius size. Any one of the leaves can be securely locked in position by a locking device. Made of nicely finished, high quality steel.

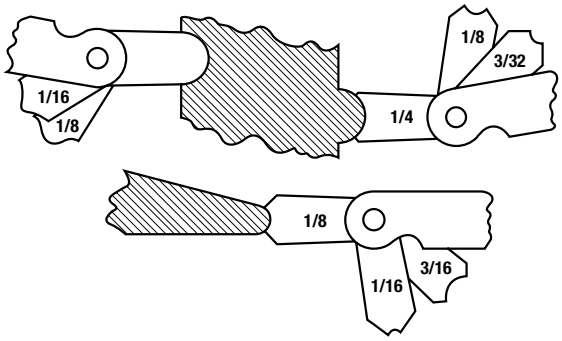

178B

Inch Reading				
Cat. No.	EDP	Range (Concave and Convex)	Increments	Leaves
178A	50664	1/32-1/4"	64ths	30
178B	50666	17/64-1/2"		32
Millimeter Reading				
Cat. No.	EDP	Range (Concave and Convex)	Increments	Leaves
178MA	50665	1-3mm 3-7mm	0.25mm 0.5mm	34
178MB	50667	7.5-15mm	0.5mm	32

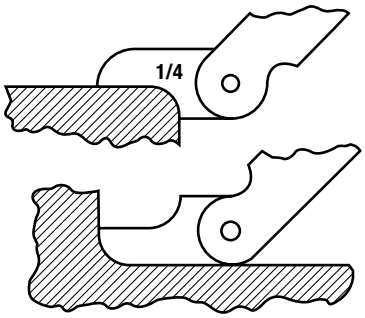

272, 272M Fillet or Radius Gages

1/32-33/64"/0.75-13MM

An external and internal radius on each leaf permits both concave and convex surfaces to be measured. The leaves are specially shaped for use in any position at any angle to measure fillets and radii in corners or against shoulders. Each leaf is stamped with the radius size and has an eccentric mounting for clearance between the leaf and the case when the gage is opened.

272A

Inch Reading				
Cat. No.	EDP	Range (Concave and Convex)	Increments	Leaves
272A	51296	1/32-17/64"	64ths	16
272B	51298	9/32-33/64"		
Millimeter Reading				
Cat. No.	EDP	Range (Concave and Convex)	Increments	Leaves
272MA	51297	0.75-5mm	0.25mm	18
272MB	51299	5.5-13mm	0.5mm	16

279 Fillet or Radius Gages

.020-.4000

This gage is similar to our 272, except that it has twenty leaves with radii from .020-.400" inclusive. Nine leaves have concave and convex radii from .020-.10" in increments of .010", four leaves with concave and convex radii from .125-.20" in increments of .025", one leaf with concave and convex radii of .250", three leaves with concave radii only from .300-.400" in increments of .050" and three leaves with convex radii from .300-.400" by an increment of .050".

279

Inch Reading			
Cat. No.	EDP	Range (Concave and Convex)	Leaves
279	51314	.020-.400"	20

Angle and Center Gages

466 Angle Gage

1-45º

A convenient, timesaving tool for inspectors, toolmakers, and diesinkers when checking angles. Tool also replaces a protractor in many instances. The gage has 18 leaves, each with a different angle including 14-1/2º (1/2 the Acme Standard of 29º). Leaves are made of the finest spring-tempered steel and both the angle edge and two sides are ground. Approximately 9/32" thick, 1-1/16" wide and 4-3/16" long.

466 Angle Gage				
Cat. No.	EDP	Range	Leaves	Angles Available
466	52463	1-45º	18	1º, 2º, 3º, 4º, 5º, 7º, 8º, 9º, 10º, 12º, 14º, 14-1/2º, 15º, 20º, 25º, 30º, 35º, 45º

466

C391 Center Gage

60º AMERICAN NATIONAL

C396 Center Gage

55º WHITWORTH OR ENGLISH

C398M Center Gage

60º METRIC

- Extremely handy for use in grinding and setting screw cutting tools
- Meets American National or U.S. 60º, Whitworth or English 55º, and Metric 60º standards
- Very useful for finding number of threads per inch through graduations in 14ths, 20ths, 24ths and 32nds of an inch on C391 and C396
- Graduations on C398M are in mm and 1/2mm
- C391 Gage also has a table of double depths of threads for determining size of tap drills
- Made of spring-tempered steel with satin chrome finish
- Ground gaging surfaces

Center Gages with Inch Graduations		
Cat. No.	EDP	Description
C391	51475	American National Standard, 60º
C396	51477	Whitworth or English Standard, 55º
Center Gages with Millimeter Graduations		
Cat. No.	EDP	Description
C398M	51478	Metric Standard, 60º

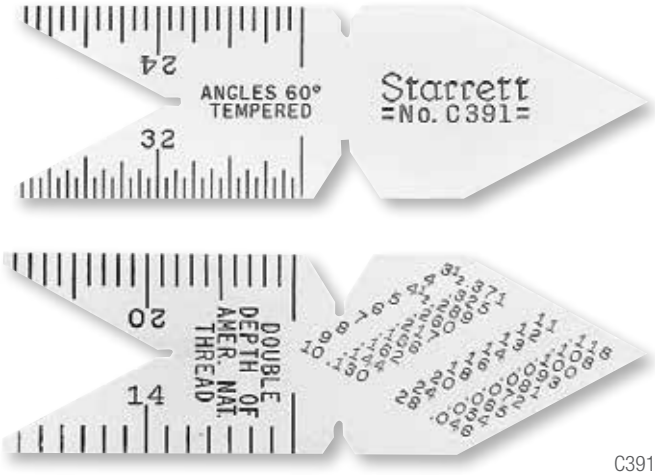

C391

Screw Pitch Gages

English and Metric Screw Pitch Gages

2-1/4-84 PITCHES (INCH)

0.25-11.5 PITCHES (MILLIMETER)

Screw pitch gages are among the most useful tools in any mechanics' tool box. They quickly determine the pitch of various threads. These gages consist of a substantial steel case with a number of folding leaves at both ends, each leaf having teeth corresponding to a specific pitch, marked on each leaf.

Starrett screw pitch gages are available in a wide range of sizes with different numbers of leaves in various pitch ranges.

V, Unified, American National 60º threads

Whitworth Standard 55º threads

International Metric Standard 60º threads

English and metric threads are similar in form, but English threads are described in threads per inch and metric threads by the distance from one crest to the next.

All screw pitch gages (except 473 and 476, which have a positive stop design) feature a locking device at both ends of the case, so leaves can be securely locked in position for use. Leaves on most gages have a special narrow design, permitting checking internal threads in nuts, etc., as well as external threads.

Various types of Starrett screw pitch gages are illustrated on the following pages, with complete specifications.

155

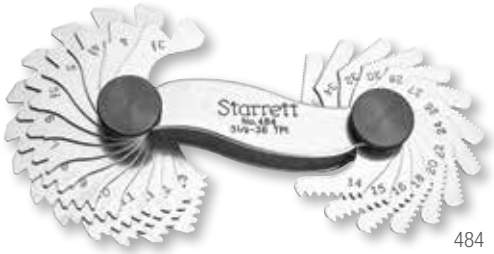

484

6

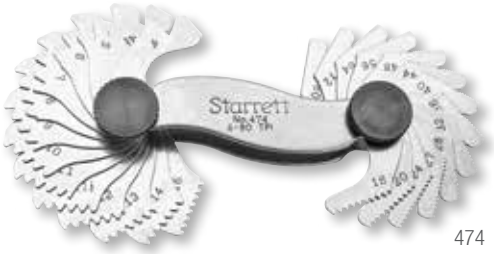

474

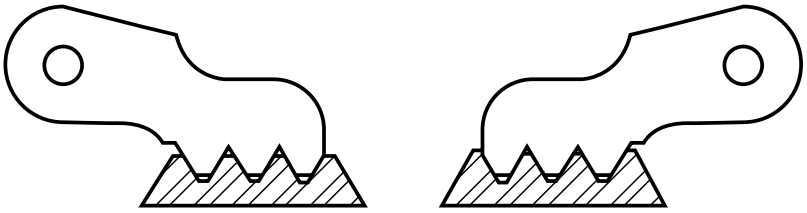

Starrett Screw Pitch Gages have the tops of the teeth flatted, permitting use of a single gage for either National Form threads or Sharp V threads

Screw Pitch Gages

Cat. No.	EDP	No. of Leaves	TPI Range	Threads per Inch (TPI)	Description
155	50588	27	2-1/4–28	2-1/4, 2-3/8, 2-1/2, 2-5/8, 2-3/4, 2-7/8, 3, 3-1/4, 3-1/2, 4, 4-1/2, 5, 5-1/2, 6, 7, 8, 9, 10, 11, 12, 13, 14, 16, 18, 20, 24, 28	With locking device and 60º center gage
484	67447	28	3-1/2–36	3-1/2, 4, 4-1/2, 5, 5-1/2, 6, 7, 8, 9, 10, 11, 11-1/2, 12, 13, 14, 15, 16, 18, 20, 22, 24, 26, 27, 28, 30, 32, 34, 36	With locking device
6	50035	30	4–42	4, 4-1/2, 5, 5-1/2, 6, 7, 8, 9, 10, 11, 11-1/2, 12, 13, 14, 15, 16, 18, 20, 22, 24, 26, 27, 28, 30, 32, 34, 36, 38, 40, 42	With locking device and 11-1/2 and 27 pipe thread pitches
474	52486	28	4–80	4, 4-1/2, 5, 6, 7, 8, 9, 10, 11, 11-1/2, 12, 13, 14, 16, 18, 20, 24, 27, 28, 32, 36, 40, 44, 48, 56, 64, 72, 80	With locking device and 11-1/2 and 27 pipe thread pitches

Formulas

American Natational V Thread

$$d = D - \frac{1.299}{N} \qquad d = D - \frac{1.732}{N}$$

D = Outside diameter of tap
d = Bottom diameter of tap
N = Number of threads per inch

Screw Pitch Gages

476 Whitworth Standard Screw Pitch Gages

55º THREADS

3-1/2 - 60 TPI (INCH)

156M, 159M International Metric Standard Screw Pitch Gages

60º THREADS

Screw Pitch Gages					
Cat. No.	EDP	No. of Leaves	TPI Range	Threads per Inch (TPI)	Description
472	52484	51	4–84	**First Corner 17 Leaves**: 4, 4-1/2, 5, 5-1/2, 6, 7, 8, 9, 10, 11, 11-1/2, 12, 13, 14, 15, 16, 18 **Second Corner 17 Leaves**: 20, 22, 24, 26, 27, 28, 30, 32, 34, 36, 38, 40, 42, 44, 46, 48, 50 **Third Corner 17 Leaves**: 52, 54, 56, 58, 60, 62, 64, 66, 68, 70, 72, 74, 76, 78, 80, 82, 84	With Locking Device and 11-1/2 and 27 Pipe Thread Pitches
473	52485	30	6–60	6, 7, 8, 9, 10, 11, 11-1/2, 12, 13, 14, 15, 16, 18, 20, 22, 24, 26, 27, 28, 30, 32, 34, 36, 38, 40, 42, 48, 50, 56, 60	With Positive Stop and 11-1/2 and 27 Pipe Thread Pitches
476	52488	30	3-1/2–60	3-1/2, 4, 4-1/2, 5, 6, 7, 8, 9, 10, 11, 12, 13, 14, 16, 18, 19, 20, 22, 24, 25, 26, 28, 30, 32, 36, 40, 44, 48, 50, 60	With Positive Stop
156M	50589	28	0.25-2.50mm	0.25, 0.30, 0.35, 0.40, 0.45, 0.50, 0.55, 0.60, 0.65, 0.70, 0.75, 0.80, 0.85, 0.90, 1, 1.10, 1.20, 1.25, 1.30, 1.40, 1.50, 1.60, 1.70, 1.75, 1.80, 1.90, 2, 2.50	With Locking Device
159M	50591	28	0.5-11.5mm	0.5, 0.75, 1, 1.10, 1.25, 1.5, 1.75, 2, 2.5, 3, 3.5, 4, 4.5, 5, 5.5, 6, 6.5, 7, 7.5, 8, 8.5, 9, 9.5, 10, 10.5, 11, 11.5	With Locking Device and 60º Center Gage

476

473

156M

159M

472

Radius Gages

167, 167M

1/64-1/2"/0.5-15MM

167

.010-.500

110 Gage Holder

S167, S167M Sets

1/64-1/2"/0.5-15MM

SD167 Sets

.010-.500

Radii or fillets can be checked or laid out easier, faster, and more accurately with Starrett 167 Radius Gages. Available individually and in sets, fractional sizes 1/64-1/2", decimal sizes .010-.500" and in millimeters from 0.5-15mm.

Many different sets for maximum convenience. Each set is furnished in an attractive case, providing complete protection and easy, instant selection of the right gage size for the job.

Gage Features

- Made of satin finish stainless steel – rust and stain resistant
- Each gage is clearly marked with its radius
- Each gage has five different gaging surfaces for both convex and concave radii
- All gages have precision finished radii with extra smooth, accurate edges

Gage Holder Features

- Any gage can be used with the Starrett 110 holder which is especially useful for checking radii in confined or hard-to-reach locations
- Two slots are provided in the holder permitting gages to be held at 30º or 45º, either square in the slot or tipped to one side
- The holder is 4" (100mm) long, providing good reach and balance

S167CHZ Radius Gage Set with 25 gages and holder in case

Holder 110 with 167-3/16 attached

Gaging radii using gage with holder

FIVE DIFFERENT GAGING SURFACES –

Ideal for Checking Convex and Concave Radii of All Types

1

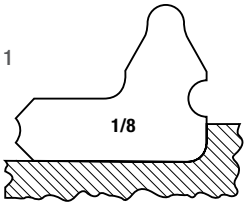

Fig 1. Checking concave (internal) radius with 90° arc. Also checks if sides are tangent to radius and 90° to each other.

2

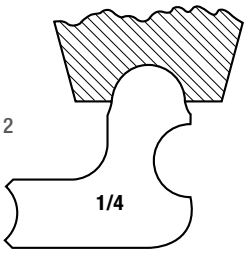

Fig 2. Checking concave (internal) radius with arc up to 180°. Also will check radius shown in Fig. 1 but not relationship of sides.

3

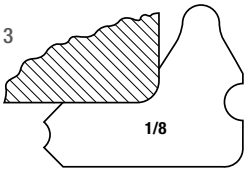

Fig 3. Checking convex (external) radius with 90° arc. Also checks if sides are tangent to radius and 90° to each other.

4

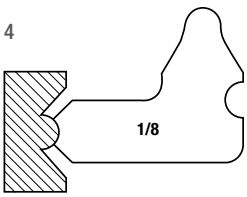

Fig 4. Checking convex (external) radius with arc of 90° or greater, or radii with sides as shown which would interfere with gage used as in Fig. 3.

5

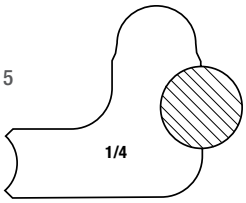

Fig 5. Checking convex (external) radius with arc of 180°; also less than 180° if sides of radius offer no interference.

S167 Radius Gage Sets – Inch

Cat. No.	EDP	Radii Range	Increments	Gages	Description
S167AZ	50615	1/32-17/64"	64ths	16	Without holder
S167AHZ	50616	1/64-17/64"	64ths	17	With holder
S167BZ	50617	9/32-1/2"	32nds	8	Without holder
S167CZ	50618	1/32-17/64" 9/32-1/2"	64ths 32nds	24	Sets 167A and S167B Combined, without holder
S167CHZ	50619	1/64-17/64"	64ths	25	Sets 167AH and S167B Combined, with holder
S167CHZ W/SLC	66876	9/32-1/2"	32nds		Sets 167AH and S167B combined,with holder, Standard Letter of Certification*
S167DZ	50620	1/32-1/2"	32nds	16	Without holder

S167M Radius Gage Sets – Millimeter

Cat. No.	EDP	Radii Range	Increments	Gages	Description
S167MAZ	55817	1-7mm	0.5mm	13	Without holder
S167MAHZ	55818	0.5-7mm	0.5mm	14	With holder
S167MBZ	55819	8-15mm	1mm	8	Without holder
S167MCZ	55820	1-7mm 8-15mm	0.5mm 1mm	21	Sets S167MA and S167MB combined, without holder
S167MCHZ	55821	0.5-7mm 8-15mm	0.5mm 1mm	22	Sets 167MB and S167MAH combined, with holder
S167MDZ	55822	1-15mm	1mm	15	Without holder

SD167 Radius Gage Sets – Decimal-Inch

Cat. No.	EDP	Radii Range	Increments	Gages	Description
SD167FZ	63464	.020-.300	0.02	19	Without holder
SD167FHZ	63460	.350-.500	0.05		With holder
SD167GZ	63433	.010-.025 .030-.100 .120-.300 .350-.500	0.005 0.01 0.02 0.05	26	Without holder
SD167GHZ	63463	.010-.025 .030-.100 .120-.300 .350-.500	0.005 0.01 0.02 0.05	26	With holder

167 Radius Gage - Accessories

Cat. No.	EDP	Description
110	50475	Holder only

* Includes redemption card for Standard Letter of Certification (SLC).

Individual Radius Gage Specifications

167 – Inch

Cat. No.	EDP	Radius
167-1/64	50646	1/64"
167-1/32	50622	1/32"
167-3/64	50623	3/64"
167-1/16	50624	1/16"
167-5/64	50625	5/64"
167-3/32	50626	3/32"
167-7/64	50627	7/64"
167-1/8	50628	1/8"
167-9/64	50629	9/64"
167-5/32	50630	5/32"
167-11/64	50631	11/64"
167-3/16	50632	3/16"
167-13/64	50633	13/64"
167-7/32	50634	7/32"
167-15/64	50635	15/64"
167-1/4	50636	1/4"
167-17/64	50637	17/64"
167-9/32	50638	9/32"
167-5/16	50639	5/16"
167-11/32	50640	11/32"
167-3/8	50641	3/8"
167-13/32	50642	13/32"
167-7/16	50643	7/16"
167-15/32	50644	15/32"
167-1/2	50645	1/2"

Individual Radius Gage Specifications

167M – mm

Cat. No.	EDP	Radius
167M-1/2	55795	0.5mm
167M-1	55796	1mm
167M-1 1/2	55797	1.5mm
167M-2	55798	2mm
167M-2 1/2	55799	2.5mm
167M-3	55800	3mm
167M-3 1/2	55801	3.5mm
167M-4	55802	4mm
167M-4 1/2	55803	4.5mm
167M-5	55804	5mm
167M-5 1/2	55805	5.5mm
167M-6	55806	6mm
167M-6 1/2	55807	6.5mm
167M-7	55808	7mm
167M-8	55809	8mm
167M-9	55810	9mm
167M-10	55811	10mm
167M-11	55812	11mm
167M-12	55813	12mm
167M-13	55814	13mm
167M-14	55815	14mm
167M-15	55816	15mm

Individual Radius Gage Specifications

167 - Decimal-Inch

Cat. No.	EDP	Radius
167-010	63434	0.01
167-015	63435	0.015
167-020	63436	0.02
167-025	63437	0.025
167-030	63438	0.03
167-040	63439	0.04
167-050	63440	0.05
167-060	63441	0.06
167-070	63442	0.07
167-080	63443	0.08
167-090	63444	0.09
167-100	63445	0.1
167-120	63446	0.12
167-140	63447	0.14
167-160	63448	0.16
167-180	63449	0.18
167-200	63450	0.2
167-220	63451	0.22
167-240	63452	0.24
167-260	63453	0.26
167-280	63454	0.28
167-300	63455	0.3
167-350	63456	0.35
167-400	63457	0.4
167-450	63458	0.45
167-500	63459	0.5

Thickness Gages

English and Metric Thickness Gages

.0015-.200"/0.03-5MM

These gages are used in automotive, aviation, diesel, food and agricultural industries. They're also used in jig, fixture, gage and experimental work. In automotive, they are especially useful when adjusting tappets, spark plugs, distributor points, checking bearing clearances and gear play, fitting pistons, rings and pins and gaging narrow slots. Made in a wide range of types and sizes, each having from 6 up to 26 leaves ranging in thickness from .0015-.200" and 0.03-5mm thick, straight or tapered.

- Now available in stainless and tempered steel
- Leaves carefully finished to correct thickness, individually tested and marked with thickness
- Locking device on most gages permits securely locking of one or more leaves in position
- Leaves are easily removed or replaced
- Rugged, substantial steel case protect leaves
- All include locking device

Inch Reading Thickness Gages with Straight Leaves

Tempered Steel Cat. No.	Tempered Steel EDP	Stainless Steel Cat. No.	Stainless Steel EDP	No. of Leaves	Size Leaves	Range Leaf Thickness (in)
172A	50649	172AS	50649	9	1/2 x 3-1/32"	.0015, .002, .003, .004, .006, .008, .010, .012, .015
66	50314	66S	73466	26	1/2 x 3-1/32"	.0015, .002, .0025, .003, .004, .005, .006, .007, .008, .009, .010, .011, .012, .013, .014, .015, .016, .017, .018, .019, .020, .021, .022, .023, .024, .025
66B	57097	66BS	73439	31	1/2 x 3-1/32"	.0015, .002, .0025, .003, .004, .005, .006, .007, .008, .009, .010, .011, .012, .013, .014, .015, .016, .017, .018, .019, .020, .021, .022, .023, .024, .025, .026, .028, .030, .032, .035
467	52464	467S	73340	13	1/2 x 4-1/2"	.0015, .002, .003, .004, .006, .008, .010, .020, .030, .040, .075, .100, .200
172E	50654	172ES	73343	8	1/2 x 12"	.002, .003, .004, .005, .006, .008, .010, .015
572A	57098			22	1/2 x 3-1/32"	.0015, .002, .0025, .003, .004, .005, .006, .007, .008, .009, .010, .012, .013, .014, .015, .016, .018, .020, .022, .025, .030, .035 6 Spark Plug Wire Gages: .025, .030, .034, .035, .040, .045
572B	57099			22	1/2 x 3-1/32"	.0015, .002, .0025, .003, .004, .005, .006, .007, .008, .009, .010, .012, .013, .014, .015, .016, .018, .020, .022, .025, .030, .035

Inch Reading Thickness Gages with Tapered Leaves

Tempered Steel Cat. No.	Tempered Steel EDP	Stainless Steel Cat. No.	Stainless Steel EDP	No. of Leaves	Size Leaves	Range Leaf Thickness (in)
66T	50315	66TS	73442	26	1/2-1/4 x 3-1/32"	.0015, .002, .0025, .003, .004, .005, .006, .007, .008, .009, .010, .011, .012, .013, .014, .015, .016, .017, .018, .019, .020, .021, .022, .023, .024, .025
172AT	50650	172ATS	73342	9	1/2-1/4 x 3-1/32"	.0015, .002, .003, .004, .006, .008, .010, .012, .015
172CT	50652			8	1/2-1/4 x 6"	.002, .003, .004, .006, .008, .010, .012, .015

Millimeter Reading Thickness Gages with Straight Leaves

Tempered Steel Cat. No.	Tempered Steel EDP	No. of Leaves	Size Leaves	Range Leaf Thickness (in)
66MA	55974	20	12.7 x 77mm	0.05, 0.10, 0.15, 0.20, 0.25, 0.30, 0.35, 0.40, 0.45, 0.50, 0.55, 0.60, 0.65, 0.70, 0.75, 0.80, 0.85, 0.90, 0.95, 1.0
173MA	57086	13	12.7 x 77mm	0.03, 0.04, 0.05, 0.06, 0.07, 0.08, 0.09, 0.10, 0.15, 0.20, 0.30, 0.40, 0.50
467M	52465	13	12.7 x 114mm	0.04, 0.05, 0.06, 0.07, 0.08, 0.10, 0.15, 0.20, 0.30, 1.0, 2.0, 3.0, 5.0

Millimeter Reading Thickness Gages with Tapered Leaves

Tempered Steel Cat. No.	Tempered Steel EDP	No. of Leaves	Size Leaves	Range Leaf Thickness (in)
172MBT	50656	9	12.7-7 x 114mm	0.04, 0.05, 0.06, 0.07, 0.08, 0.10, 0.15, 0.20, 0.30
173MAT	57087	13	12.7-7 x 77mm	0.03, 0.04, 0.05, 0.06, 0.07, 0.08, 0.09, 0.10, 0.15, 0.20, 0.30, 0.40, 0.50
173MCT	57088	13	12.7-7 x 152mm	0.03, 0.04, 0.05, 0.06, 0.07, 0.08, 0.09, 0.10, 0.15, 0.20, 0.30, 0.40, 0.50

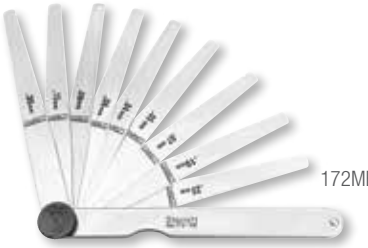
172MBT

172AT

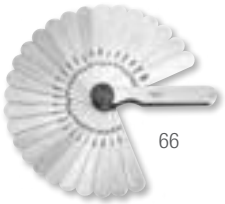
66

172A

467

572A

66T

"Feeler" Stock

666 Thickness Gage or "Feeler" Stock in Rolls

25' DISPENSER CASES .001-.015"

20', 25' CARDBOARD BOXES .0005-.025"

666M Thickness Gage or "Feeler" Stock in Rolls

7.6M DISPENSER CASES 0.03-0.35MM

6.1M CARDBOARD BOXES 0.40-0.50MM

This handy product includes thickness stock, housed in convenient rewindable dispenser rolls. Having the thickness stock in a case makes it very useful for cutting off the required length for adjusting tappets, spark plugs, distributor points, checking bearing clearances and gear play, fitting pistons, rings and pins, gaging narrow slots, etc. This stock is also useful for shimming in fixturing and die work.

- Now available in stainless and tempered steel
- Handy 25' and 7.6m rolls 1/2" and 12.7mm wide, in a compact, sturdy plastic rewindable dispenser case. This case handles stock up to .015" and 0.35mm only.
- Rewind feature permits retracting thinner feeler stock into the case, preventing damage
- Roll stock in thicknesses of .016" or 0.40mm and over are furnished in 20' or 6m (nondispensable) rolls in a cardboard box. Also, the .0005", 25' size is furnished in a cardboard box.
- Marked every 6" or 150mm with a line, thickness in thousandths of an inch or in hundredths of a mm (exception 666-1/2)
- Case provides the ability to snip off the desired length without any waste

666-1

Inch Reading Rolls – Dispenser Case					
Tempered Steel		Stainless Steel			
Cat. No.	EDP	Cat. No.	EDP	Thickness	Length
666-1	52796	666S-1	73350	.001"	25'
666-1 1/2	52797	666S-1 1/2	73351	.0015"	
666-2	52798	666S-2	73363	.002"	
666-2 1/2	52799	666S-2 1/2	73364	.0025"	
666-3	52800	666S-3	73371	.003"	
666-4	52801	666S-4	73372	.004"	
666-5	52802	666S-5	73373	.005"	
666-6	52803	666S-6	73374	.006"	
666-7	52804	666S-7	73375	.007"	
666-8	52805	666S-8	73376	.008"	
666-9	52806	666S-9	73377	.009"	
666-10	52807	666S-10	73353	.010"	
666-11	52808	666S-11	73354	.011"	
666-12	52809	666S-12	73355	.012"	
666-13	52810	666S-13	73356	.013"	
666-14	52811	666S-14	73357	.014"	
666-15	52812	666S-15	73358	.015"	

Inch Reading Rolls – Cardboard Box					
Tempered Steel		Stainless Steel			
Cat. No.	EDP	Cat. No.	EDP	Thickness	Length
666-1/2	64210	666S-1/2	73352	.0005"	25'
666-16	52813	666S-16	73359	.016"	20'
666-17	52814	666S-17	63370	.017"	
666-18	52815	666S-18	73361	.018"	
666-19	52816	666S-19	73362	.019"	
666-20	52817	666S-20	73365	.020"	
666-21	52818	666S-21	73366	.021"	
666-22	52819	666S-22	73367	.022"	
666-23	52820	666S-23	73368	.023"	
666-24	52821	666S-24	73369	.024"	
666-25	52822	666S-25	73370	.025"	

Millimeter Reading Rolls – Dispenser Case			
Tempered Steel			
Cat. No.	EDP	Thickness	Length
666M-3	52823	0.03mm	7.6m
666M-4	52824	0.04 mm	
666M-5	52825	0.05mm	
666M-6	52826	0.06mm	
666M-8	52827	0.08mm	
666M-10	52828	0.10mm	
666M-15	52829	0.15mm	
666M-20	52830	0.20mm	
666M-25	52831	0.25mm	
666M-30	52832	0.30mm	
666M-35	52833	0.35mm	

Millimeter Reading Rolls – Cardboard Box			
Tempered Steel			
Cat. No.	EDP	Thickness	Length
666M-40	52834	0.40mm	6.1m
666M-45	52835	0.45mm	
666M-50	52836	0.50mm	

NEW!

"Feeler" Stock

667 Thickness Gages or "Feeler" Stock

.0005-.030"

667M Thickness Gages or "Feeler" Stock

0.03-0.50MM

These gages are widely used in automotive, aviation, diesel and farm equipment manufacture and service and also in jig, fixture, gage and experimental work.

- Now available in stainless and tempered steel
- Inch sizes are 12" long, 1/2" wide and furnished in 33 different thicknesses ranging from .0005-.030"
- Millimeter sizes are furnished in 300mm lengths, 12.7mm wide in 14 different thicknesses ranging from 0.03-0.50mm
- Rounded ends make stock easier to work with
- Made of the finest tempered steel and stainless steel
- Each piece marked every 6" with thickness (exception 667-1/2) and in individual envelope
- With convenient 3/16" (5mm) hole punched in the end for hanging

Millimeter Gages – 300mm		
Cat. No.	EDP	Thickness
667M-3	52869	0.03mm
667M-4	52870	0.04mm
667M-5	52871	0.05mm
667M-6	52872	0.06mm
667M-8	52873	0.08mm
667M-10	52874	0.10mm
667M-15	52875	0.15mm
667M-20	52876	0.20mm
667M-25	52877	0.25mm
667M-30	52878	0.30mm
667M-35	52879	0.35mm
667M-40	52880	0.40mm
667M-45	52881	0.45mm
667M-50	52882	0.50mm

Inch Gages – 12"				
Tempered Steel		Stainless Steel		
Cat. No.	EDP	Cat. No.	EDP	Thickness
667-1/2	64209	667S-1/2	73394	.0005"
667-1	52837	667S-1	73392	.001"
667-1 1/2	52838	667S-1 1/2	73393	.0015"
667-2	52839	667S-2	73405	.002"
667-2 1/2	52840	667S-2 1/2	43706	.0025"
667-3	52841	667S-3	73417	.003"
667-4	52842	667S-4	73419	.004"
667-5	52843	667S-5	73420	.005"
667-6	52844	667S-6	73421	.006"
667-7	52845	667S-7	73422	.007"
667-8	52846	667S-8	73423	.008"
667-9	52847	667-9	73424	.009"
667-10	52848	667S-10	73395	.010"
667-11	52849	667S-11	73396	.011"
667-12	52850	667S-12	73397	.012"
667-13	52851	667S-13	73398	.013"
667-14	52852	667S-14	73399	.014"
667-15	52853	667S-15	73400	.015"
667-16	52854	667S-16	73401	.016"
667-17	52855	667S-17	73402	.017"
667-18	52856	667S-18	73403	.018"
667-19	52857	667S-19	73404	.019"
667-20	52858	667S-20	73407	.020"
667-21	52859	667S-21	73408	.021"
667-22	52860	667S-22	73409	.022"
667-23	52861	667S-23	73410	.023"
667-24	52862	667S-24	73411	.024"
667-25	52863	667S-25	73412	.025"
667-26	52864	667S-26	73413	.026"
667-27	52865	667S-27	73414	.027"
667-28	52866	667S-28	73415	.028"
667-29	52867	667S-29	73416	.029"
667-30	52868	667S-30	73418	.030"

667

S667A and S667D

Thickness Gage or "Feeler" Stock Assortments

Two complete, handy thickness gage assortments:

S667A (Inch) set consists of one each of 32 different pieces, 1/2" x 12" long from .001" through .030" thick (the entire individual range, with exception of the .0005" thickness, as listed on previous page).

S667MA (Millimeter) set consists of one each of 14 different pieces, 12.5mm x 300mm long from 0.03mm through 0.50mm thick (complete range, as on previous page).

S667D Bulk inch-reading assortment consists of 108 pieces, 1/2" x 12", in nine different thicknesses from .0015" to .015" thick. Twelve pieces of a size are packed in a box and each piece in an individual envelope. The nine boxes, together with an extra box for holding odd pieces, are packed in a convenient storage carton.

Individual Assortments				
Tempered Steel		Stainless Steel		
Cat. No.	EDP	Cat. No.	EDP	Description
S667A	63274	S667AS	73443	Complete Starrett inch thickness gage assortment – One each, 32 different sizes
S667MA	64949			Complete Starrett millimeter thickness gage assortment – One each, 14 different sizes
Bulk Assortment				
Tempered Steel		Stainless Steel		
Cat. No.	EDP	Cat. No.	EDP	Description
S667D	52883	S667DS	73444	Bulk quantity assortment: 108 pieces in nine thickness sizes; 12 pieces of a size per box; .0015, .002, .003, .004, .006, .008, .010, .012, .015"

Packed 12 pieces of a size in a box; each piece in individual envelope; 9 boxes in a carton.

Thickness Gages

806 Thickness Gage or "Feeler" Stock Holders

CLAMP AT ONE END

806D Thickness Gage or "Feeler" Stock Holders

CLAMP AT BOTH ENDS

These 806 Thickness Gage Holders provide a handy, convenient means of rigidly holding single leaves or strips of thickness gage stock of any thickness from .001-.025" (0.03-0.5mm).

Stock up to 6" (150mm) long is easily inserted in the holder and firmly gripped in the desired position by a cam lock. This permits all of the stock to be used, because as it wears from use, the defective end can be snipped off and new stock pulled out until entirely used up.

Available in two types as listed in the chart on the right, either to clamp stock at one end or both ends. Dull nickel finish. Size approximately 3/32" thick x 9/16" wide x 5-1/4" long (2.4 x 14 x 130mm). 806D holders have contrasting finish to eliminate the possible confusion on which end holds the thicker or thinner stock.

Thickness Gage or "Feeler" Stock Holders		
Cat. No.	EDP	Description
806	53039	Holder only - Clamps stock at one end
806D	53040	Holder only - Clamps stock at both ends

806 with stock clamped on one end

806D with stock clamped on both ends

245, 245M Engineers' Combination Taper, Wire and Thickness Gage

INCH/MILLIMETER

Consists of a wire gage, a taper gage for measuring slot widths, and an assortment of thickness gage leaves, all folding within a compact steel case. The gage measures 1/2" wide x 4-3/4" long (12.7 x 120mm) and has a locking device to lock any leaf or leaves in position.

Both 245 and 245M have an English Standard wire gage leaf similar to our 188, but with shorter range, sizes numbered from 19-36 (.042-.004"), plus two additional sizes, 1/16" and 1/8". The reverse side has decimal equivalents in thousandths.

245 has a taper gage leaf for measuring slot widths from 1/64-3/16" in 64ths of an inch, the reverse side having a 3" scale graduated in 8ths and 16ths. It has nine thickness or feeler leaves as follows: .002, .003, .004, .006, .008, .010, .012, .015 and 1/16".

245M has a taper gage leaf for measuring slot widths from 0.5-5mm in 0.5mm, the reverse side having an 80mm scale graduated in mm and 1/2mm. It has eleven thickness or feeler leaves as follows: 0.04, 0.05, 0.06, 0.07, 0.08, 0.10, 0.15, 0.20, 0.30, 1 and 2mm.

245M

Inch Reading		
Cat. No.	EDP	Description
245	51170	With taper gage, English standard wire gage and 9 Inch reading thickness gage leaves
Millimeter Reading		
Cat. No.	EDP	Description
245M	51171	With taper gage, English standard wire gage and 11mm reading thickness gage leaves

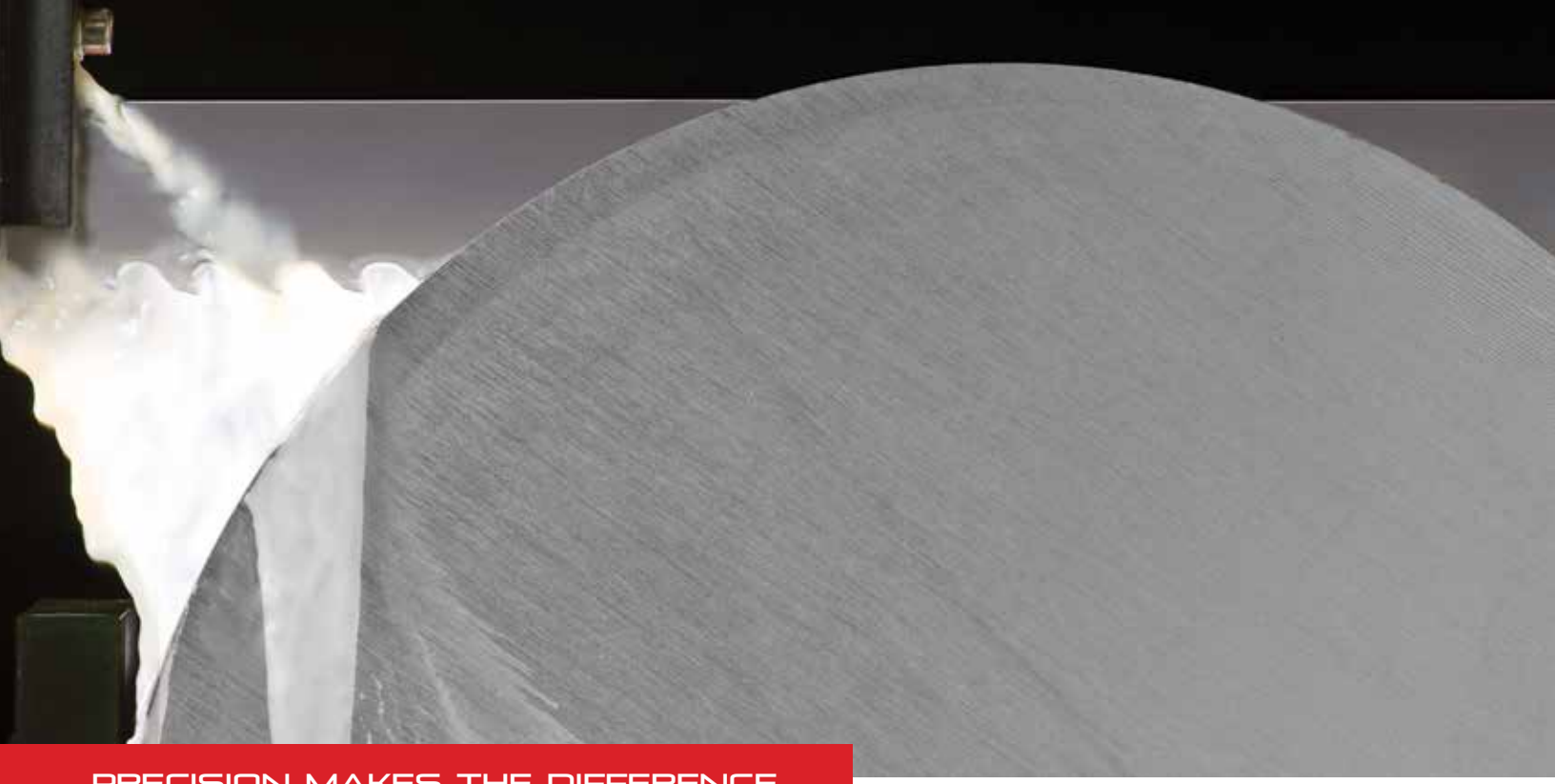

PRECISION MAKES THE DIFFERENCE

HIGH PRODUCTIVITY AND LONGER LIFE

For cutting hard materials!

The Advanz™ MC5 utilizes a multiple chip grind with a high/low tooth sequence. The chip load is spread out over more teeth to facilitate longer life.

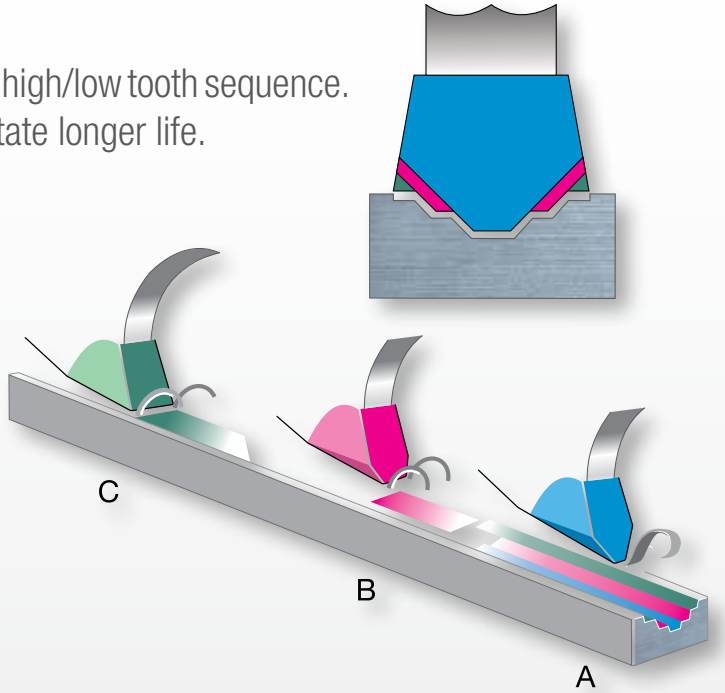

Starrett®

(978) 249-3551 • starrett.com

Follow us!

PRECISION SHOP TOOLS

Surface Gages

56 Small Surface Gages

(HARDENED STEEL BASE)

- Smaller base and spindle than other surface gages and is designed for lighter work
- Two frictionally held gage pins in the hardened steel base which can be pushed down and used against the edge of a surface plate or T-slot for linear work
- Weighs only ten ounces (0.28kg.) and takes up very little space in a toolbox
- Only 1-3/8" (35mm) high, including the lower sleeve in the rocker arm
- Scriber has a 3/32" (2.4mm) diameter and is 3-1/4" (82mm) long

56 Small Surface Gages					
		Spindle		Base	
Cat. No.	EDP	in	mm	in	mm
56A	50289	4	100		
56B	50290	Two, 4 and 7	100 and 175	2 x 1-1/2	50 x 38
56C	50291	7	175		

57 Full-sized Surface Gages

(CAST IRON BASE)

- Full-size surface gage with attractive finish
- Base is ground flat with two frictionally held gage pins that can be pushed down and referenced against the edge of a surface plate or T-slot for linear work

257 Full-sized Surface Gages

(HARDENED STEEL BASE)

- Finest full-size surface gage
- Stable steel base is fully hardened, ground and nicely finished
- Four frictionally held gage pins that add versatility for referencing the tool

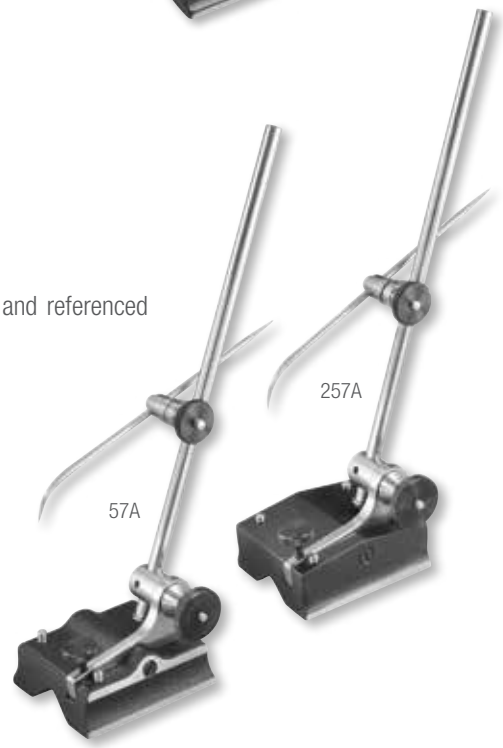

57 Full-sized Surface Gages			
Cat. No.	EDP	Spindle Length	Base - Length x Width
57A	50292	9" (225mm)	3 x 2-9/16" (75 x 65mm)
57B	50293	9" and 12" (225 and 300mm)	
57C	50294	12" (300mm)	3-3/4 x 3-3/8" (95 x 85mm)
57D	50295	12" and 18" (300 and 450mm)	
257 Full-sized Surface Gages			
Cat. No.	EDP	Spindle Length	Base - Length x Width
257A	51240	9" (225mm)	2-7/8 x 2-3/8" (72 x 60mm)
257B	51241	9" and 12" (225 and 300mm)	
257C	51242	12" (300mm)	3-1/2 x 3-3/16" (90 x 80mm)
257D	51243	12" and 18" (300 and 450mm)	

Spindles, Scribers and Standard Snugs for 57 and 257 Surface Gages			
Fits	Spindles	Scribers	Standard Snugs*
A and B Models	5/16 x 9" and 12" (8 x 225mm and 300mm)	9/64 x 6" (3.6 x 150mm)	PT18718 (EDP 50709) with 5/16" post hole†
C and D Models	3/8 x 12" and 18" (9.5 x 300mm and 450mm)	5/32 x 8-1/2" (4 x 216mm)	PT18724 (EDP 50710) with 3/8" (9.5mm) post hole

† For snug with 8mm post hole diameter, order PT27171, EDP 66457.
* Will hold scribers, rods or indicator stems ranging from 3/32-1/4" (2.4-6.35mm) and allows use with these test indicators: 196, 651, 711**, 564**, 708**, 811**, 650, 709**
** Snugs must be used with the proper indicator holder.

257A

Surface Gages

57S, 58S Universal Snugs for Surface Gages, Indicators and Accessories

- Convenient attachment of scribers and test indicator shanks to surface gage magnetic bases, indicator tool post holders and gage rods
- Fits all 57 and 257 Surface Gages and test indicator clamps and post holders
- Permits the use of all of our test indicators: 196, 564*, 650, 651, 708*, 709*, 711 and 811*. (*Snugs must be used with the proper indicator holder)

Universal Snugs for Surface Gages

		Spindle Hole Diameters		Gripping Hole Diameters	
Cat. No.	EDP	in	mm	in	mm
57S	50296	5/16, 3/8	8, 9.5	9/64, 5/32, 3/16, 1/4	3.5, 4, 4.8, 6.35
58S	56613	1/4, 5/16, 3/8	6.35, 8, 9.5	Range from 3/32-1/4	Range from 2.4-6.35

58S

57S

257A with 711GPSZ

Surface Gages

Surface Gages are designed for a wide variety of uses. This is a basic tool for machinists and toolmakers. The main uses are for accurately scribing lines, transferring measurements and for probing surfaces in inspection work.

Lines can be scribed to heights and depths. Lines can also be scribed on horizontal surfaces referenced from gage pins on the tool.

Scribers are usually set in relation to rule graduations (our 62 Rule Holder is valuable in this respect) or height gages.

Marrying one of these tools with one of our test indicators makes easy work of checking flatness, parallelism, height and depth.

Scribers

29 Scratch Gage

This tool is extremely useful for scribing lines parallel to a given surface. It is made of steel and the head is hardened. The gage is securely locked by a knurled clamp screw and split bushing in the head.

The marker is a square piece of thin tempered-steel firmly held against the edge of the beam by a screw. The beam is graduated a full 6" by 64ths of an inch, and fine adjustments may be made by a slight rotating movement of the head.

29B	50201	6" (150mm)	64ths

29B Scratch Gage

70 Pocket Scribers

CARBIDE OR HARDENED STEEL POINTS

The handle is made of steel, knurled and nickel plated. The scriber point is steel, properly hardened and finely tapered so the location of the point is not obscured.

The scriber is held firmly in the handle by a knurled chuck and when not in use can be reversed, telescoped into the handle, and locked by the chuck. The hexagon-shaped head prevents rolling.

67 Improved Scriber

Scribers are steel, properly tempered and well finished. The points are finely tapered so that the scriber point can be easily seen on the work. The handle, as well as the points, have a knurled grip.

The long bent point is useful for reaching through holes. The length of the scriber with the short point is 9" (225mm) and with the long bent point, 12" (300mm). Points screw into the handle and fit either end. The knurled handle is nickel-plated.

68 Adjustable Sleeve Scriber

A very handy scriber with a point 8" (200mm) in length that is held by an adjustable knurled sleeve. The adjustable sleeve may be clamped close to or away from the working point.

The sleeve is nickel-plated. Available with or without knife point.

70 Pocket Scribers						
Cat. No.	EDP	Point	Point Length		Handle Diameter	
			in	mm	in	mm
70A	50323	Steel	2-3/8	60	1/4	6.4
70B	50324		2-7/8	72	3/8	9.5
70AX	50327	Carbide	2-3/8	60	1/4	6.4
70BX	56092		2-7/8	72	3/8	9.5

Points Only for 70 Pocket Scribers			
Part No.	EDP	Point	For Starrett Scriber No.
PT02355A	70332	Steel	70A
PT02355B	70333		70B
PT14398	71527	Carbide	70AX
PT19306	72049		70BX

67 Improved Scribers		
Catalog	EDP	Description
67A	50316	Complete with 3 points (1 straight, 1 short bent, 1 long bent)
67B	50317	With 2 points (1 straight, 1 short bent)

Points Only for 67 Improved Scribers		
Part	EDP	Description
PT16584	71555	Extra straight point
PT16585	71556	Extra short bent point
PT16586	71557	Extra long bent point

68 Adjustable Sleeve Scribers		
Cat. No.	EDP	Description
68A	50322	With knife point
68B	50321	Without knife point

70A, 67A, 68A Scribers

Precision Shop Tools

1610 Kleenscribe™ Layout Dye

- Deep blue, quick-drying dye for clean, dry metal surfaces
- Brush or spray an opaque blue background that makes scribed lines stand out sharp and clear
- Will not rub off on hands or clothing or flake away
- Unaffected by cutting lubricants and heat generated during machining
- To remove, use a rag or wiper, moistened with denatured alcohol

Ideal For Numerous Applications:

- Laying out dies, cams, templates, jigs, fixtures, patterns, castings
- Touching cutting tool to work before setting machine for cut
- Identifying tools, parts, bar stock and other shop metals
- Checking alignment of gears and wearing parts

Kleenscribe™ Layout Dye			
Cat. No.	EDP	Size	Description
1610-4	53212	4oz. (0.1 liter)	Plastic Bottle
1610-16	53213	16 oz. (0.5 liter)	Plastic Bottle
1610-32	53214	32 oz. (1 liter)	Plastic Bottle
1611	55896	11-1/2 oz. (0.3 liter)	Aerosol Can

1 Adjustable-Jaw Cut Nippers

Special design provides powerful leverage for efficient and clean cutting. Especially recommended for all applications involving wire cutting. These tools can be adjusted for wider jaw openings to easily cut tile and mosaics.

- Heat-treated steel frames for strength
- Carbide jaws for extra long life
- Red vinyl coated handles for a firm, comfortable grip
- Jaws can be detached and replaced, or resharpened. Jaws should be ground in pairs and referenced from the serrations
- Jaws can be adjusted on the frames. Each jaw has an allowance of about 1/4" (6.4mm) to cut tile or to adjust after resharpening.
- Stud and stop screw on the handle can be adjusted for proper jaw closure, thereby preventing damage from excess pressure on the jaws
- A flat safety spring below the cutting edges of the jaws forms a yielding seat for the end of the wire to press against while being cut

1X-7

1 Adjustable-Jaw Cut Nippers										
		Jaws Only (Pair)		Size		Capacity (Max. Wire Dia.)		Jaw Width		
Cat. No.	EDP	Part No.	EDP	in	mm	in	mm	in	mm	Jaws
1X-5 1/2	50004	PT01931-1	50006	5-1/2	138	.050	1.3	21/32	16.5	Carbide Tipped
1X-7	50005	PT01932-1	50007	7	175	.080	2	13/16	21	Carbide Tipped

Precision Shop Tools

Wiggler or Center Finder with Attachments 828

Wiggler/Center Finder S828 and four different attachments adapt to countless applications and are readily interchangeable. The attachments are snapped in the chuck without removing the collet nut and are clamped by a ball swivel-joint that permits adjustment to an angular position or true concentricity.

With Pointed Shank 828A, working centers can be quickly and accurately located. Spring tension on the ball of the point permits guiding the point to true concentricity so that the work can be brought into perfect alignment with the machine spindle.

Ball Contact 828B is useful in locating work by first bringing the contact (ball diameter .250" or 6.35mm) against the work, a slot, hole, shoulder, or end, and indexing the work to the desired position relative to the spindle.

Disc Contact 828C, which has a small disc at the end (.100"/2.54mm) diameter, permits use in more confined areas such as slots or shallow holes.

Offset Indicator Holder 828D with the Last Word® Test Indicators, the user can sweep holes or O.D.s for checking run-out or concentricity, establish center distances, check straightness or alignment of flat surfaces.

Complete set with case includes: 828B Ball Contact, 828A Wiggle/Center Finder with pointed shank, 828C Disc Contact, and 828D Offset Indicator Holder

Wiggler or Center Finder with Attachments

Cat. No.	EDP	Description
S828HZ	53064	Wiggler/Center Finder, Complete with case and 4 attachments, 828B, C, D, PT09186
S828	53065	Wiggler/Center Finder with 3 Attachments, 828B, C, PT09186, without indicator holder, without case
828A	53066	Wiggler/Center finder with pointed shank
PT09186	71164	Pointed Shank only
828B	53067	Ball contact only (.250"/6.35mm ball)
828C	53068	Disc contact only (.100"/2.54mm disc)
828D	53069	Offset indicator holder only

827MA single end

827B with double end

Above: Locating the center with 827MB
Left: Locating the edge of a part with 827MA

827 Edge Finders

.375", .500" AND 10MM BODY DIAMETERS FOR FAST, ACCURATE WORK LOCATION

Work surfaces may be located easily, quickly and accurately with these edge finders. Work with flat, straight edges, shoulders, grooves, round work, studs, dowels or center points and scribed lines – all can be accurately located with this handy tool. Body and contacts are made of tool steel, hardened, ground and lapped to close tolerances for diameter and concentricity.

How To Use:

Edge finders are easy to use. They are placed in a collet or chuck. The worktable is then traversed to obtain contact between the rotating edge finder and the work. Contact will shift to concentric position relative to the body and with very slight additional table adjustment, will move off center with a decided wobble. At this point, the center of the finder is exactly one-half the diameter of the contact from the work edge, permitting accurate location for other machining operations relative to the edge.

For locating center points and scribed lines, the pointed contact is used by putting a pencil or rule against the center point and making it run concentrically. Then the point is brought down to the center point or intersection of scribed lines and the table is adjusted so that when the tool barely touches the work, the lineup with the point in question can be ascertained.

827 Edge Finders

Cat. No.	EDP	Body Diameter	Contact Diameter	Description
827A	53062	.375"	.200"	Single End
827B	53063	.500"	.200" and pointed contact	Double End
827MA	56041	10mm	6mm	Single End
827MB	66452	10mm	6mm and pointed contact	Double End

Furnished in attractive, protective case.

Precision Shop Tools

Collet Adapter

This is a timesaving accessory for our 827A Edge Finders. It allows quick installation and removal of the edge finder, eliminating the need for collet changes on Bridgeports and similar machines.

It can also be used with any other attachment with a 3/8" post.

The progressive steps are: 1/4", 5/16", 3/8", 1/2", 5/8", 3/4" and 1". Step depths vary from .100" to .200".

Collet Adapter		
Cat. No.	EDP	Description
PT28314	68846	Collet Adapter

SF190 "Little Giant" Jack Screw set, complete with all attachments

"Little Giant" Jack Screws

190

2-1/4"–3-3/8"/57-85MM

191

1-1/2"–2-1/4"/38-57MM

"Little Giant" Jack Screws are very handy for leveling work on planer beds, upright drills, setting up machinery, and for general use in the toolroom or machine shop.

190 and 191 have 20-pitch screws and for those who desire a finer adjustment, the F190 has a 40-pitch screw.

An auxiliary pointed screw (D) is supplied, to be used in place of the screw with swivel cap. Extension base (E) is furnished for places where it is not possible to obtain a bearing on a flat surface. Extension V base (F) is for use against a cylindrical form.

190 and 191 "Little Giant" Jack Screws					
Photo Key	Cat. No.	EDP	Cat. No.	EDP	Description
	SF190	64622			Set complete, with fine-adjusting screw and all attachments
	S190	50680	S191	50687	Set complete with all attachments
A	F190A	64623			Jack only, with fine-adjusting screw
	190A	50681	191A	50688	Jack only
B	190B	50682	191B	50689	Extension base
C	190C	50683	191C	50690	Extension base
D	F190D	64624			Auxiliary pointed screw with fine-adjusting screw
	190D	50684	191D	50691	Auxiliary pointed screw
E	190E	50685	191E	50692	Extension base
F	190F	50686	191F	50693	Extension V base

190 Specifications									
Range		Maximum Height with Attachments		Jack (A) Base Diameter		Extension (B)		Extension (C)	
in	mm	in	mm	in	mm	in	mm	in	mm
2-1/4 – 3-3/8	57-85	6-3/8"	162	1-1/4	32	2	50	1	25
191 Specifications									
Range		Maximum Height with Attachments		Jack (A) Base Diameter		Extension (B)		Extension (C)	
in	mm	in	mm	in	mm	in	mm	in	mm
1-1/2 – 2-1/4	38-57	3-3/4	95	1	25	1	25	1/2	13

Precision Shop Tools

815 Toolmakers' Hammer with Built-In Magnifying Lens

A PRACTICAL TOOL – MAKES A GREAT GIFT TOO!

Faster, easier and more accurate spotting and punching of centerlines and intersections is now possible with the this tool.

High-power magnification makes it easy to spot the punch and strike without once removing the eyes from the work.

Weighing only four ounces (113 grams) it is made of a steel forged chromium with plated finish. Both flat and ball peen heads are hardened and are offset for use in corners or close to obstructions. Shock resistant lens and hang hole.

815 Toolmakers' Hammer with Built-In Magnifying Lens		
Cat. No.	EDP	Description
815	53041	Hammer only
815P	53042	Personalized (specify name clearly)

129 Bench Blocks

The 129 Bench Block is useful for holding work when driving pins, drilling, etc. The block is made from hardened steel and ground. A V-groove across the face accommodates round and odd-shaped stock. The smooth finish preserves the finish of the work being held.

The knurled side provides a good gripping surface, making it easier to handle. Recessed base to make it lighter, yet withstands hard usage.

129 Bench Blocks			
Cat. No.	EDP	Size Diameter x Height	Description
129	50559	3 x 1-1/2" (75 x 38mm)	129 bench block with oversize holes from 1/8-5/8" (3-16mm) diameter and one V-Groove

119 Bench Blocks

The 119 Bench Block is a good choice for all-around machine shop and toolroom use when a larger, heavy-duty block is required. This block weighs five pounds (2.3kg). The base is hex-shaped, so the block can be held rigidly in a vise. It is made from alloy steel, hardened, and ground, top and bottom.

119 Bench Blocks			
Cat. No.	EDP	Size Diameter x Height	Description
119	50491	4-7/8 x 1-1/2" (120 x 38mm)	119 Bench Block with ten oversize holes from 1/8-7/8" (3-22mm) diameter and two V-Grooves at right angles

Above: 129
Right: 119

Locating hole center on a workpiece with the 117B Center Punch and 815 Toolmakers' Hammer

Punches

Automatic Center Punches with Adjustable Stroke

18

Rugged automatic punches with all-steel handles and parts

- Internal mechanism automatically strikes a blow when downward pressure is applied
- Adjustable knurled cap regulates the force of the blow
- Spring tension, which regulates the blow, is constant so marks made by the point are uniform in depth and size for each setting
- All sizes are identical in style, differing only in the striking power
- The point can be easily removed for regrinding or replacement
- Heavy-duty 18C is capable of striking a much heavier blow than the other sizes

18A

Rugged automatic center punch with adjustable stroke

Automatic Center Punches with Adjustable Stroke						
		Length		Diameter		
Cat. No.	EDP	in	mm	in	mm	Description
18AA	50119	4	100	7/16	11	Punch
18A	50120	5	125	9/16	14	
18C	56757	5-1/4	130	11/16	17	Punch, Heavy-Duty

Accessories		
Part No.	EDP	Description
PT06689	12901	Point only for 18AA
PT06690	12902	Point only for 18A
PT22256	72445	Point only for 18C

818

This punch is similar to our 18C, except that it has a lightweight, knurled aluminum handle for a positive grip and easy handling

- No hammer required! Just hold the punch in an upright position, press the handle down, and a built-in mechanism strikes a perfect center mark every time.
- The force of the blow can be adjusted by turning the knurled cap
- All working parts made of properly hardened tool steel. Hardened tool steel point may easily be removed for resharpening or replacement. (Replacement PT22256)
- Works on metal, plastics, wood and other machinable materials

818

Easy one-hand precision center punching

818 Automatic Center Punch					
		Length		Diameter	
Cat. No.	EDP	in	mm	in	mm
818	53048	5	125mm	5/8	16

819 Hinge-Locating

This automatic centering punch combines all the features of our 818 lightweight aluminum punch with an exclusive self-centering locating sleeve that automatically centers starter holes for screws

- Simply engage the beveled edge of the sleeve with the countersunk hole in the hinge and press down on the handle until the built-in mechanism strikes a blow for truly concentric starting holes every time. To draw hinges, etc., sideways, tilt the punch slightly in the opposite direction.
- Eliminates the risk of drilling off center, causing screws to pull hinges or hardware off center
- Punch can be adjusted for striking light or heavy impressions by turning the knurled cap
- Point is easily removed for replacement (Replacement PT09966-0)

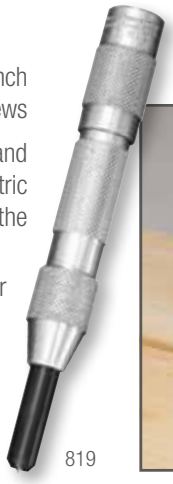

819

Automatically locates and centers holes through hinges, latches, catches, etc.

819 Hinge-Locating Automatic Center Punch					
		Length		Diameter	
Cat. No.	EDP	in	mm	in	mm
819	53049	5	125	5/8	16

Punches

S117

S264WB

117 Center Punches with Round Shanks

- Hardened and properly tempered
- Well proportioned
- Knurled finger grip
- Ground at the proper angle
- Accurately centered tips

264 Center Punches with Square Shanks

- Hardened and properly tempered
- Square knurled grip
- Will not roll
- Accurately centered tips
- Ground at the proper angle

117 and 264 Center Punches							
117		264		Length		Dia. at Top of Tapered Point	
Cat. No.	EDP	Cat. No.	EDP	in	mm	in	mm
117AA	50482	264A	51278	3	75	1/16	1.5
		264B	51279	3-1/2	88	5/64	2
		264C	51280	3-3/4	95	3/32	2.5
117A	50483	264D	51281	4	100	5/64	2
117B	50484					3/32	2.5
117C	50485					1/8	3
117D	50486					5/32	4
		264E	51282	4-1/4	108	5/32	4
		264F	51283	4-1/2	114	3/16	5
117E	50487	264G	51284	5	125	1/4	6.5

117 and 264 Center Punch Sets		
Cat. No.	EDP	Descrpition
S117PC	50488	Set of 5, 117AA, A, B, C, D in Plastic Case
S264WB	51285	Set of 7, 264A, B, C, D, E, F, G in Round Red Plastic Box

Punches

816 Prick Punches

- Accurately centered
- Ground at a sharp angle
- Hardened and tempered
- Knurled grip

800 Square-Head Nail Sets

- Round, knurled grip
- Large, square head
- Will not roll
- Beveled head prevents breakage
- Cupped punch surface
- Hardened and tempered steel

816 and 800 Punches							
816		800		Length		Punch Diameter	
Cat. No.	EDP	Cat. No.	EDP	in	mm	in	mm
		800A	53029			1/32	0.8
		800B	53030			1/16	1.5
816A	53043			4	100	5/64	2
		800C	53031			3/32	2.5
816B	53044	800D	53032			1/8	3
816D	53046	800E	53033			5/32	4

816 and 800 Punch Sets		
Cat. No.	EDP	Description
S816PC	57078	Combination Starrett Punch Set in Plastic Case. One Each 816A, B, D Prick Punches, and Two Center Punches 117AA, B
S800PC	64131	Set of 5 in Protective Plastic Case. One Each of 800A, B, C, D, E

Punches

565 Drive Pin Punches

- Hardened and tempered steel
- Knurled grip

S565

S565PC

S565WB

SB565

S565Z

B565 Brass Drive Pin Punches

- Ideal for softer materials
- Solid brass prevents damaging delicate work
- Knurled grip

565 and B565 Drive Pin Punches							
565		B565		Length		Diameter Punch	
Cat. No.	EDP	Cat. No.	EDP	in	mm	in	mm
565A	52578	B565A	12465			1/16	1.5
565B	52579	B565B	12466			3/32	2.5
565C	52580	B565C	12467			1/8	3
565D	52581	B565D	12468			5/32	4
565E	52582	B565E	12469	4	100	3/16	5
565F	52583	B565F	12470			7/32	5.5
565G	52584	B565G	12471			1/4	6
565H	52585	B565H	12472			5/16	8

565 and B565 Drive Pin Punch Sets		
Cat. No.	EDP	Description
S565WB	52586	Set of 8 Punches (1 of Each Size) in Round Red Plastic Box
S565PC	52587	Set of 8 Punches (1 of Each Size) in Protective Vinyl Case
SB565Z	12473	Set of 8 Punches (1 of Each Size) in Fabric Pouch

Punches

S248

S248PC

SB248

SB248Z

248 Drive Pin Punches for Machine Shop and Motor Service Work

- Extra-long drive pin punches, measuring 8" (200mm). The bodies are 4-1/2" (115mm) and the drive pin sections are 3-1/2" (90mm) long.
- Well-proportioned, hardened, properly tempered with a knurled grip
- Designed to withstand hard use
- Provide a most satisfactory punch for machine shop and motor service work
- Diameter of punches is slightly less than listed

B248 Brass Drive Pin Punches for Machine Shop and Motor Service Work

- Same features as 248 extended length drive pin punches, but in a softer brass construction ideal for more delicate work
- Available in four sizes from 3/16" to 3/8" and as a full set of four in an attractive fabric pouch

248 and B248 Drive Pin Punches

248		B248 Brass		Length		Diameter Punch	
Cat. No.	EDP	Cat. No.	EDP	in	mm	in	mm
248A	51181					1/8	3
248B	51182	B248B	12460			3/16	5
248C	51183	B248C	12461	8	200	1/4	6
248D	51184	B248D	12462			5/16	8
248E	51185	B248E	12463			3/8	9.5

248 and B248 Drive Pin Punch Sets

Cat. No.	EDP	Description
S248PC	51186	Set of 5 Punches (1 of Each Size) in Protective Vinyl Case
S248	51187	Set of 5 Punches (1 of Each Size) in Plain Box
SB248Z	12464	Set of 4 Brass Punches (1 of Each Size) in Fabric Pouch

Screwdrivers

S555Z

S555Z-7

S551Z

S551Z-7

555 Jewelers' Screwdrivers

- Ideal for fine, delicate work
- Swivel knobs are concave to fit the finger
- Hexagonal knobs to prevent rolling
- Knurled grip
- Overall length of screwdrivers is approximately 3-3/4" (95mm)
- Replaceable blades available

551 Precision Screwdrivers

The 551 Screwdrivers with soft-touch handle are lightweight and ergonomic. The blades are made of chromium-vanadium steel, hardened and chrome-plated, allowing them to hold up well in the toughest applications.

Features

- Precision-machined tips for top quality and exact fit
- Vapor-chromed non-slip tips
- Hardened for maximum durability
- Tapered handles allow rapid rotation
- Swivel knobs are concave to fit finger

555 Jewelers' Screwdrivers

Complete Screwdriver Cat. No.	EDP	Blade Only Part No.	EDP	Blade Width (in/mm)	Phillips Blade No.
555AA	52549	PT02449AA	70361	.025" (0.6mm)	
555A	52550	PT02449A	70362	.040" (1mm)	
555B	52551	PT02449B	70363	.055" (1.4mm)	
555C	52552	PT02449C	70364	.070" (1.8mm)	
555D	52553	PT02449D	70365	.080" (2mm)	
555E	52554	PT02449E	70366	.100" (2.5mm)	
555F	52561	PT14443	71534		#0

555 Jewelers' Screwdriver Sets

Cat. No.	EDP	Description
S555Z-6	52564	Set of 6 Screwdrivers, 555AA, A, B, C, D, E – In Case
S555Z-7	52566	Set of 7 Screwdrivers, 555AA, A, B, C, D, E, F – In Case

551 Precision Screwdrivers

Complete Screwdriver Cat. No.	EDP	Blade Width (in/mm)	Phillips Blade No.
551A	67195	.060" (1.5mm)	
551B	67196	.080" (2.0mm)	
551C	67197	.100" (2.5mm)	
551D	67198	.120" (3.0mm)	
551E	67199		#00
551F	67200		#0
551G	67201		#1

551 Precision Screwdriver Sets

Cat. No.	EDP	Description
S551Z-7	67203	Set of 7 Screwdrivers With Case, 551A, B, C, D, E, F, G
S551ZZ	67204	Case Only

Starrett Screwdrivers

- Made for relatively small and very delicate work
- Bodies are made from knurled, nickel-plated steel
- Replaceable blades, made from the best quality steel, properly tempered and nickel-plated
- A slight turn of the knurled chuck locks the blade in place
- Blades can be reversed into the screwdriver body for safety

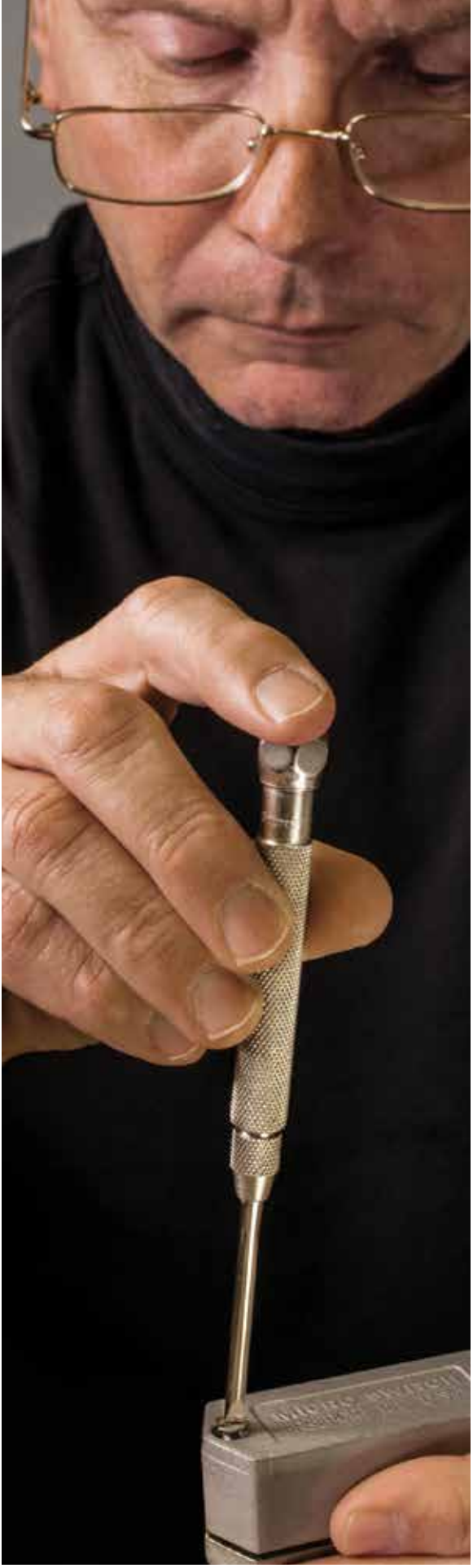

Screwdrivers

553 Pocket Screwdrivers

The 533 Screwdrivers feature a hexagonally shaped head to prevent them from rolling. When not in use, the blade can be reversed into the screwdriver body for conveniently and safely carrying them in pockets. Size takes no more room than a penknife.

Handy steel and carbide scriber points are also available to fit these handles, including 70 Scriber points.

Features

- Hexagonal head prevents rolling
- Small in size with reversable/removable blade
- Steel and carbide scriber points available
- Knurled grip

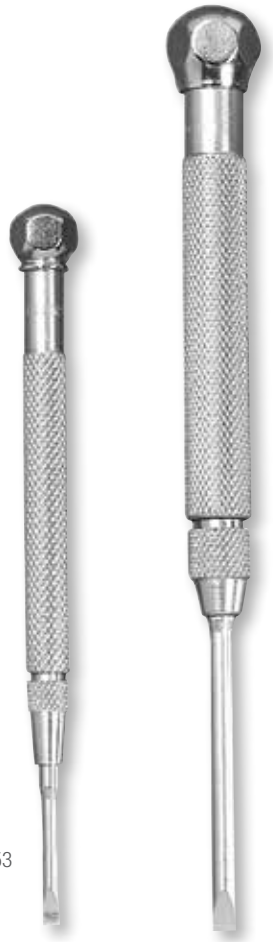

553

553 Pocket Screwdrivers							
		Blade Only		Blade Width		Blade Length	
Cat. No.	EDP	Part No.	EDP	in	mm	in	mm
553A	52543	PT02351A	70330	.100	2.5	1-7/8	48
553B	52544	PT02351B	70331	.150	3.8	3	75

Scriber Points Only				
Steel		Carbide		
Cat. No.	EDP	Cat. No.	EDP	Fits Model
PT02355B	70333	PT19306	72049	553B

Precision Shop Tools

161 Toolmakers' Parallel Clamps

These parallel clamps are designed for maximum strength and rigidity. They are extremely useful for holding work together in tapping and drilling and on various machine setups. The ends of the jaws are tapered to permit clamping under shoulders or in recesses.

A retaining ring holds the loose jaw in alignment when the clamp is being opened or closed. The clamps are made of steel, nicely finished and hardened.

161AA	50593	3/4	19	21/32	16.5	Single Clamp
161A	50594	1-1/4	32	13/16	20.5	Single Clamp
161B	50595	1-3/4	44	1	25	Single Clamp
161C	50596	2-1/4	57	1-7/32	30	Single Clamp
161D	50597	2-3/4	70	1-25/32	45	Single Clamp
161E	50598	3-1/2	89	2-1/4	57	Single Clamp

161 Clamps

580

580 Precision Angle Plate

These angle plates are invaluable for accurate work in toolroom and small production applications when flatness, squareness and parallelism is important.

- Hardened and tempered steel
- Precision ground, square and parallel
- Convenient step for smaller work 3/4" (19mm) down from the top and a 1/4" (6.35mm) seat
- 10 holes tapped with a 1/4-20 thread for fastening to fixtures and clamping work to the angle plate

580 Precision Angle Plate

Cat. No.	EDP	Size/Description in	mm	Description
580	64961	3 x 3 x 3	75 x 75 x 75	Angle Plate

54 Hold-Downs

- Improved design firmly holds work flat on a machine bed or in a vise
- Contact edges are tapered to hold work securely and force it downward to the bed of the machine or against any parallel surface
- Especially useful for holding small work or thin materials without distortion
- Made of tool steel, hardened and ground

54 Hold-Downs

Cat. No.	EDP	Length in	mm	Width in	mm
54A (Pair)	50274	4	100	27/32	21

54A

Vises and Clamps

581 Precision Grinding Vise

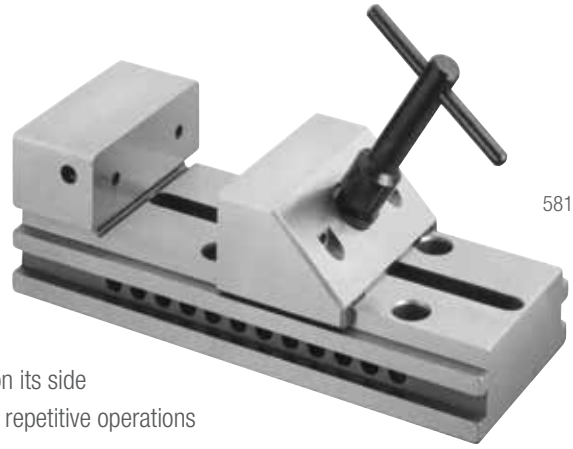

581

- Extremely useful for accurate grinding
- Hardened steel construction
- Ground flat, square, and parallel within .0002" (0.005mm)
- Jaw pressure on workpiece is forward and downward for repeatable positioning and maximum holding power
- Jaw opening 4" (100mm), jaw depth 1-1/4" (32mm)
- Movable jaw is slightly narrower than the base, enabling the vise to be used on its side
- 1/4-20 tapped hole in each side of the solid jaw to allow the use of a stop for repetitive operations
- "T" handle wrench provided for tightening the movable jaw
- Four drilled and counterbored holes for 5/16 bolts in the base of the vise for bolting to a sine plate or the bed of a machine tool
- Angle blocks available on special order
- For attaching special jaw plates, two holes are drilled in both the solid and movable jaws

581 Precision Grinding Vise

Cat. No.	EDP	Capacity Jaw Opening x Depth in	mm	Description
581	64962	4 x 1-1/4	100 x 32	Grinding Vise with T-Handle Wrench

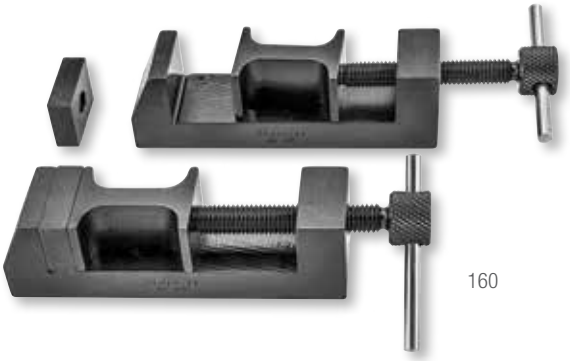

160

160 Toolmakers' Steel Clamps

These clamps are useful in layout work or for holding work securely in drilling and other similar operations. Each clamp is furnished with two take-up blocks that slip on the end of the screw. The blocks are held to allow a slight swivel action that conforms the angle of the block to the shape of the work being held.

There is a hole in the base of the clamps so they may be fastened to the bench and used as a small vise. Clamps are made of case-hardened steel and are smoothly finished.

160 Toolmakers' Steel Clamps

Cat. No.	EDP	Capacity in	mm	Description
160	50592	2	50	Pair of Clamps

Pin Vises

S240

240 Pin Vises with Tapered Collets

.010-.200"/0.25-5.1MM

- Special tapered collet, providing maximum clamping surface
- Smaller body diameter than the chuck to allow fast opening and closing and rapid rotation when used on small work
- Available individually or as a complete set in a convenient case

240 Pin Vises			
		Range	
Cat. No.	EDP	in	mm
240A	51136	.010-.055	0.25-1.4
240B	51137	.025-.075	0.64-1.9
240C	51138	.045-.135	1.2-3.4
240D	51139	.110-.200	2.8-5.1
240 Pin Vise Sets			
Cat. No.	EDP	Description	
S240Z	51140	Set of All 4 Sizes in Protective Vinyl Case	

S162

162 Pin Vises

0-.187"/0-4.8MM

The handles of these pin vises are reduced in size so that they can be rapidly rotated between thumb and finger when filing small work.

162 Pin Vises			
		Range	
Cat. No.	EDP	in	mm
162A	50599	0-.040	0-1
162B	50600	.030-.062	0.8-1.6
162C	50601	.050-.125	1.3-3.2
162D	50602	.115-.187	2.9-4.8
162 Pin Vise Sets			
Cat. No.	EDP	Description	
S162Z	50604	Set of All 4 Sizes in Protective Vinyl Case	

165

165 Double End Pin Vise

0-.125"/0-3.2MM

- Reversible collets with two size capacities at each end
- One chuck holds work or tools 0-.031" and .093-.125" diameter (0-0.8mm and 2.5-3.2mm). The other chuck holds .031-.062" and .062-.093" diameter (0.8-1.6mm and 1.6-2.5mm).
- "Back support" provided by beveled chuck ends

165 Double End Pin Vise			
		Range	
Cat. No.	EDP	in	mm
165	50608	0-.125	0-3.2

S166

166 Pin Vises with Insulated, Octagonal Handles

0-.187"/0-4.8MM

These pin vises are the same as our 162 except that they have an insulating PVC handle which is octagonally shaped, preventing them from rolling when laid down.

166 Pin Vises			
		Range	
Cat. No.	EDP	in	mm
166A	50609	0-.040	0-1
166B	50610	.030-.062	0.8-1.6
166C	50611	.050-.125	1.3-3.2
166D	50612	.115-.187	2.9-4.8
166 Pin Vise Sets			
Cat. No.	EDP	Description	
S166Z	50614	Set of All 4 Sizes in Protective Vinyl Case	

Pin Vises

Starrett pin vises are useful for securely holding small stock, taps, drills, reamers, scribers, wire, small files, and other tools. The jaws on all are hardened and with a few turns of the binding nut, a firm grip may be obtained. Handles and binding nuts are nickel-plated except for the 166 pin vise.

A hole extends through the full length of the handles so that wires of any length and any diameter up to the full size of the tool can be held.

NOTE: These tools not recommended for powered use.

Pin Vises

93 T-Handle Tap Wrenches

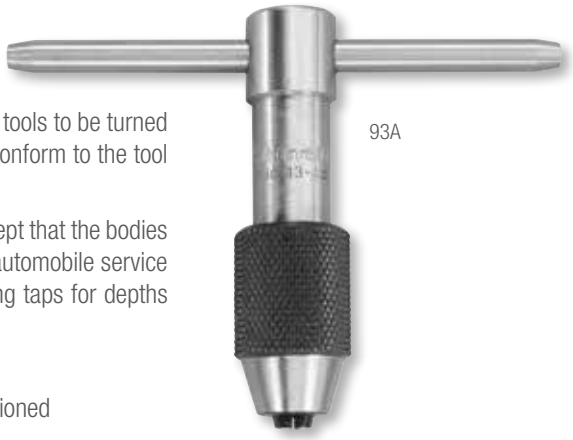
93A

The 93 T-Handle Tap Wrenches are for holding taps, drills, reamers and other small tools to be turned by hand. They are properly heat treated to withstand ordinary shop use. The jaws conform to the tool being held, making it rigid and less apt to loosen.

The 93D, E and F sizes are identical in construction to the 93A, B and C models, except that the bodies are proportionately longer. These longer tap wrenches are very handy in machine, automobile service and aviation repair shops because they eliminate the need for stocking special long taps for depths which cannot be reached with shorter wrenches.

Features

- Sliding handle is frictionally held, permitting the handle to be removed or positioned

NOTE: These tools are designed to hold square shanks. Round shanks can be gripped, but care must be used. Excessive tightening may break the binding nut.

93 T-Handle Tap Wrenches

Cat. No.	EDP	Capacity Tap Size in	mm	Square Shank in	mm	Body Length in	mm
93A	50427	1/16-3/16	1.6-4.7	1/16-5/32	1.6-4	2	50
93B	50428	7/32-7/16	5.5-11	5/32-1/4	4-6.4	2-1/2	65
93C	50429	1/4-1/2	6.4-12.7	3/16-5/16	4.7-8	3-1/2	90
93D	50430	1/16-3/16	1.6-4.7	1/16-5/32	1.6-4	6	150
93E	50431	7/32-7/16	5.5-11	5/32-1/4	4-6.4	10	250
93F	50432	1/4-1/2	6.4-12.7	3/16-5/16	4.7-8	13	330

91A

91 Tap Wrenches

The 91 Tap Wrenches are strong and well proportioned. They are nicely finished and the gripping surfaces are properly tempered. They will firmly hold square or round shanks. They are plunger operated by knurled sleeve – the spring inside the sleeve causes plunger to back off when pressure is removed.

NOTE: Round shanks can be gripped, but care must be used. Excessive pressure may break the moveable V-jaw.

91 Tap Wrenches

Cat. No.	EDP	Capacity Tap Size in	mm	Square Shank in	mm	Body Length in	mm
91A	50419	1/16-1/4	1.6-6.35	3/32-5/32	2.4-4	6	150
91B	50420	3/16-1/2	4.7-12.7	5/32-9/32	4-7	9	225
91C	50421	1/4-5/8	6.35-16	5/32-3/8	4-9.5	12	300
91D	50422	5/16-3/4	8-19	13/64-7/16	5.2-11	16	400

174 Tap Wrench

This is a well-designed tap wrench, ideal for holding smaller diameter taps, drills, reamers and other tools up to 1/4" (6.35mm) in diameter.

It will firmly grip round or square shanks. It is lightweight, well proportioned, and the gripping surface is properly heat treated.

174

174 Tap Wrench

Cat. No.	EDP	Capacity Tap Size in	mm	Square Shank in	mm	Body Length in	mm
174	50658	No. 0-14	1/4 diameter	6.35	3-5/8	90	

Fixturing

268 V-Blocks and Clamp

1-1/8"/28MM CAPACITY

- Cast iron construction
- 1-1/2" (38mm) square and 2" (50mm) long
- Clamp is ribbed for extra strength and will hold work up to 1-1/8" (28mm) in diameter

268C with Clamp

268 V-Blocks and Clamp				
		Capacity		
Cat. No.	EDP	in	mm	Description
268A	51287	1-1/8	28	2 V-Blocks (one pair)
268C	51289			Complete set with 2 V-Blocks (one pair) and clamp

268 V-Blocks and Clamp Accessories		
Cat. No.	EDP	Description
268B	51288	Clamp only

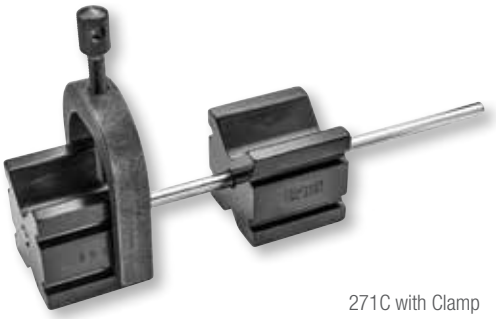

271C with Clamp

271 V-Blocks and Clamp

1-1/4"/32MM CAPACITY

- Case hardened steel for wear resistance
- For use singly or in pairs
- Includes a steel rod that passes through each block, firmly held by friction positioning to keep blocks in alignment
- Two grooves on each side of the blocks will hold the clamp for small or large work
- Steel forged clamp holds work up to 1-1/4" (32mm) in diameter

271 V-Blocks and Clamp				
		Capacity		
Cat. No.	EDP	in	mm	Description
271A	51293	1-1/4	32	2 V-Blocks (one pair)
271C	51295			Complete set with 2 V-Blocks (one pair) and clamp

271 V-Blocks and Clamp Accessories		
Cat. No.	EDP	Description
271B	51294	Clamp only

278 V-Blocks and Clamps

1"/25MM CAPACITY

- Precision ground to extreme accuracy
- Vees are central, parallel, and square with the ends and sides
- Hardened and ground steel construction
- Numbered in series so the vees in each set are always in alignment
- 1/4-20 tapped hole through the sides for attachment to an angle iron that can then be attached to a lathe faceplate or held by a magnetic chuck
- Each block is 1-1/4" (32mm) square and 1-5/8" (40mm) long

278 with Clamps

278 V-Blocks and Clamps				
		Capacity		
Cat. No.	EDP	in	mm	Description
278	51312	1	25	Complete Set with 2 V-Blocks (One Pair) and 2 Clamps

278 V-Blocks and Clamp Accessories		
Cat. No.	EDP	Description
278B	51313	Clamp Only

Precision V-Blocks and Clamps

Starrett V-Blocks come in a variety of styles to suit the numerous requirements of machinists. They are for general shop use and layout work, as well as for holding stock in place during light-duty milling, drilling, and grinding operations. All clamp screws have a hole to help secure the workpiece.

Fixturing

566 Dual-Vee Magnetic V-Block

1-3/4"/44MM CAPACITY

- Designed for versatility and accuracy
- All working surfaces are precision ground
- Two precision vees will hold round stock sizes from 1/4 - 1-3/4" (6.4-44mm) diameter
- Powerful, permanent magnet is controlled by a rotary switch
- All working surfaces are heat treated for long wear and stability
- Each block is 2-1/2" wide x 3" high x 3" long (63 x 75 x 75mm)

566

566 Dual-Vee Magnetic V-Block				
		Capacity		
Cat. No.	EDP	in	mm	Description
566	63323	1-3/4	44	Dual-Vee Magnetic V-Block

568 V-Blocks and Clamps for Round or Square Work

2"/50MM ROUND CAPACITY

1-7/16"/36MM SQUARE CAPACITY

These rugged and versatile blocks have the following features:

- Hardened steel, precision ground parallel and square
- V-grooves are ground central and parallel to the sides and base – perfect alignment in matched pairs
- Clamps have screw holes at 45º and 90º to hold either square or round work
- Stepped groove construction permits high or low clamp mounting for small or large work
- Clamps do not project over the width of the block, permitting it to be used on the base, ends or sides
- 3/8-16 tapped holes permit mounting blocks on faceplates or angle irons
- Each block is 2-1/2" long x 3" wide x 2" high (63 x 75 x 50mm)

Pair of 568 V-Blocks

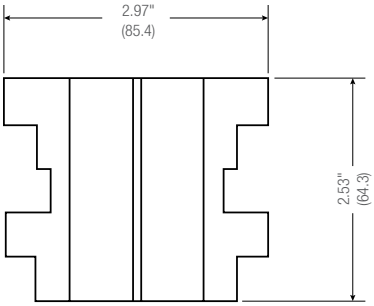

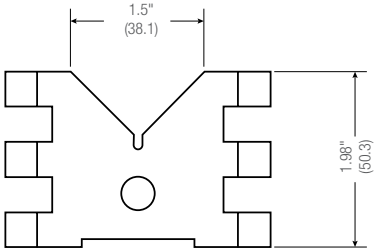

568 V-Blocks and Clamps			
Cat. No.	EDP	Capacity	Description
568A	52590	2" (50mm) dia. round; 1-7/16" (36mm) square (1-9/16" [40mm] with screw at top)	1 V-Block and clamp
568C	52592		Complete set with 2 V-Blocks and 2 clamps (matched pair)

568 V-Blocks and Clamp Accessories		
Cat. No.	EDP	Description
568B	52591	Clamp Only

Fixturing

567 V-Block and Clamp

1-5/16"/33MM CAPACITY

- The clamp is smaller than the outside width of the block, but has an adjustable side screw to support the block and prevent tilting
- The V at the stepped end is at right angles to the base and is handy for holding shouldered studs, pins, etc.
- A clearance hole for drilling or removing dowel pins is provided in the block
- The block has four 3/8-16 tapped holes, two in the base and one on each side for attachment to an angle iron. The angle iron holding the block can then be attached to a lathe faceplate or held by a magnetic chuck.
- The clamp is a strong forging
- The block is hardened and precision ground. The sides are parallel and the V is central and parallel to the sides and base.
- Can be used on its base, on the end or on either side

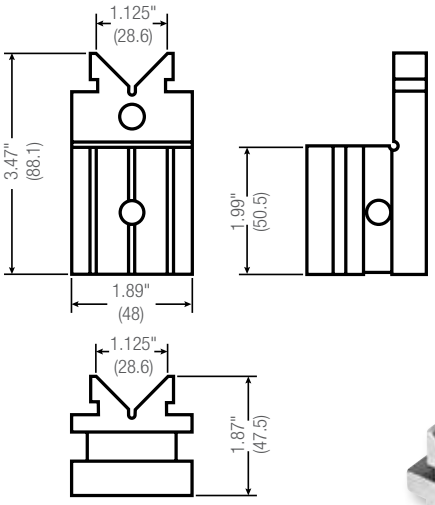

567 V-Block and Clamp				
		Capacity		
Cat. No.	EDP	in	mm	Description
567	52588	1-5/16	33	Complete set with 1 V-Block and 1 clamp

567 V-Block and Clamp Accessories		
Cat. No.	EDP	Description
567B	70885	Clamp only

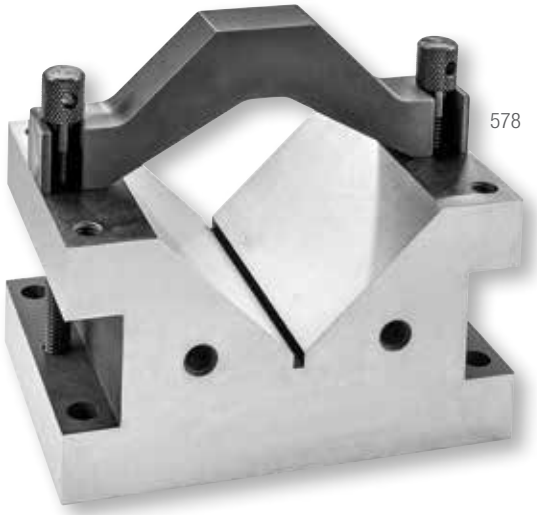

Above: V-Block with reversible clamp in downward facing position (Line drawing illustrates clamp in upward facing position)

578 V-Block and Clamp for Larger Capacity Work

4"/100MM CAPACITY

This is our largest capacity V-block, which is ideal for toolroom, inspection and production work. Hardened steel

- Precision ground flat, square and parallel
- Rugged, reversible, hardened clamp can accommodate 9/16-4" (14-100mm) diameters of almost any shape of work
- No clamp interference when the block lies on either side
- Three available clamp positions
- Two tapped holes (3/8-16) in one end for mounting the V-block perpendicular to faceplates, etc.
- Available in matched pairs by special order

578 V-Block and Clamp		
Cat. No.	EDP	Description
578	64960	V-Block and clamp for larger capacity work
578B	64988	Clamp only with 2 screws

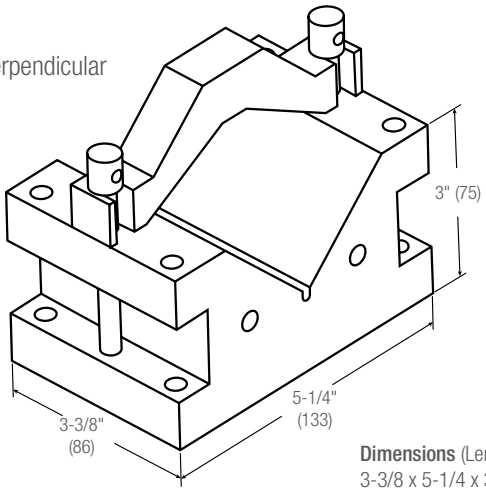

Dimensions (Length x Width x Height): 3-3/8 x 5-1/4 x 3" (86 x 133 x 75mm)

Using the hand vise with clamp mounted for benchwork applications

Fixturing

86 Combination Hand Vise

The 86 Combination Hand and Bench Vise has a wide range of uses for all toolmakers, mechanics, hobbyists and do-it-yourselfers. When a vise is needed at different locations for convenience, this tool is indispensable. By removing the handle and substituting the clamp, the tool may be fastened to benches, shelves, etc., approximately 1/2 - 2-1/8" (13-54mm) in thickness, and can be adjusted to different positions according to the user's preference.

When used as a hand vise, the leverage obtainable with the ball end lever will be appreciated in comparison with a wing nut commonly employed for this purpose. The jaws are made from forgings and are properly tempered.

86 Combination Hand Vise

Cat. No.	EDP	Capacity in	mm	Description
86A	50404	1-1/2	38	Hand Vise with Clamp

86A

86A wtih Clamp

M1 oil

M1® Industrial Quality All-Purpose Lubricant

M1 is the "modern one" – the superior alternative. It dries and will not attract dirt, dust or other contaminants as other leading lubricants do.

Starrett is a leader in precision measuring tools. We use M1 in our manufacturing areas and it works. M1 will work for you too. The best lubricant value for your money.

- M1 produces a micro-thin, airtight coating/film that simultaneously dries as it protects, avoiding dirt, grime, etc., that other "wet" lubricants actually attract
- The can will spray upside down in awkward places without losing propellant power

Lubricates: M1 is free of silicone, making it an excellent lubricant. Its ability to stand up to extreme temperatures makes it ideal year-round.

Penetrates: Deep-down penetration works quickly to free frozen nuts, bolts, and metal parts. Actually gets under caked-on dirt to clean the metal for removal.

Prevents Rust: Protects metal against rust and corrosion damage by providing a molecular shield that locks to the metal.

Cleans: Actually removes grease, tar, and grime from metal parts and painted surfaces. Cleans and polishes for lasting protection.

Stops Squeaks: Has instant lubrication properties that spread into those hard-to-reach metal parts to stop squeaking and sticking.

Displaces Moisture: M1 is not soluble in water, so it gets under moisture to lift it away from the surface to be protected.

Nonconductive: Prevents short circuits in high moisture environments, halts electrical leakage from wet ignition wires.

12 oz. Aerosol Can

1 pt. Spray bottle sold empty for refilling from bulk container

M1 Aerosol Cans spray upside down and in awkward places. Spray wand (shown) is included with each aerosol can.

Industrial Applications

Applications for industry are endless. Protect working surfaces of machinery, use in dip tanks to protect production parts in process, or apply on tools when stored. M1 is also ideal in highly corrosive situations that destroy metal equipment like rollers, racks, conveyors, etc. used in marine environments.

Universal Applications

Use to dry wet automotive ignition systems. Great on ski bindings and prevents snow from sticking to shovels. Ideal on sticky drawer slides and window frames. Removes tar from car bumpers and painted surfaces. Can also be easily removed to prepare surfaces for painting. Use on tools, hinges, appliances, guns, knives, bicycles, mowers, fishing gear, locks, and more.

Bulk Containers

Larger size containers of M1 make economical sense. You can also use and refill the handy spray dispenser bottle that saves you money and prevents the unwanted waste and disposal of empty cans.

M1 All-Purpose Lubricant		
Cat. No.	**EDP**	**Description**
M1.95173	95173	Case of 12/12 oz. (0.3 liter) aerosol cans
Bulk Containers		
Cat. No.	**EDP**	**Description**
M-1.01	93221	4/1 gal. (3.8 liter) containers
M-1.05	93227	5 Gal. (19 liters)
M-1.53	93233	53 gal. (200 liters) drum
Spray Dispenser		
Cat. No.	**EDP**	**Description**
M-1.15	93251	Case of 4/1 pint (0.5 liter) empty spray bottles

M1 is available in bulk for industrial applications in 1 Gallon Cans, 5 Gallon Pails, and 53 Gallon Drums.

1 Gallon (3.8 liters)

5 Gallon (19 liters)

53 Gallon Drum (200 liters)

Specifications	
Color	Amber (clear)
Odor	Pleasant
Specific Gravity	.80 @ 60º F (15.5º C)
Viscosity	2.2 cSt (centiStokes) converts to 10.5 SUS (seconds universal Saybolt) at 72º F (22.2º C)
Lubrication	1500 lb (680.4 kg) of pressure (independent testing)
Flash Point	174 °F (79 °C) T.C.C.
VOC (wt%) CARB Method 310	9.2
Pour Point	-100º F (-73º C) excellent low temperature stability
Evaporation Rate	.7 (water = 1)
Coverage	3500 to 4000 sq. ft. (72-82 sq. meters) per U.S. Gal. (4.5 liters)
Boiling Point, Initial	370 - 470º F (187.8 - 243.3º C)
Weight, Applied Coating	1.7 x 10-3 lb per sq. ft.
Film Thickness	.0004" (0.010mm) average
Dielectric Strength	18,000v with .100" (2.54mm) gap
Humidity	Meets and exceeds ASTM-D655 zero rust after 1000 hours
Salt Spray	Meets and exceeds ASTM-B117 zero rust after 48 hours Indoor protection lasts up to a year. Outdoor protection – reapply as needed.
NSF registered 124332 Category Code H2	Acceptable as a lubricant, release agent or anti-rust film on equipment and machinery parts in and around food processing areas where there is no possibility of direct food contact

Precision Shop Tools

1620 Tool and Instrument Oil

Special high-refining process makes Starrett Tool and Instrument Oil colorless, ensures thorough lubrication of close-fitting parts at extreme temperatures and provides a strong, lasting film over all areas requiring protection against rust.

Features

- This oil is made to our specifications and used in our factory to lubricate and protect our precision measuring tools and instruments
- General purpose lubricant for a wide range of applications
- Ideal for maximum protection and lubrication of measuring tools, precision instruments and light machinery
- Guards highly finished tools, parts and machined surfaces against rust
- Protects firearms, fishing tackle and other sporting equipment and keeps working parts in perfect condition
- Cleans bright metals and polishes furniture
- Starrett oil can also be used for automobile generators, starters, hinges, locks, and springs

1620

1620 Tool and Instrument Oil		
Cat. No.	EDP	Description
1620	53216	4 fl. oz. (0.1 liter) plastic bottle

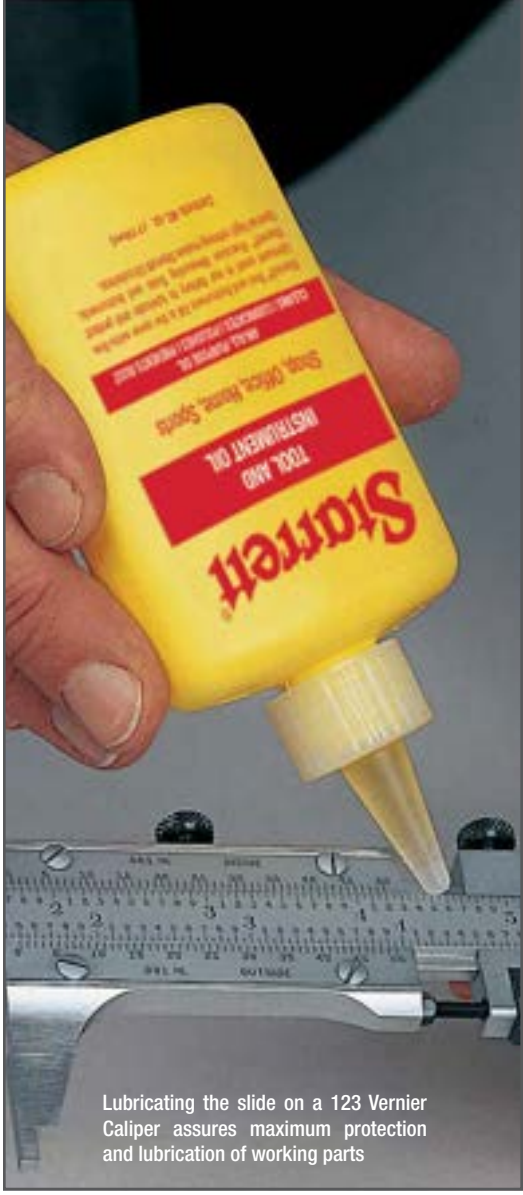

Lubricating the slide on a 123 Vernier Caliper assures maximum protection and lubrication of working parts

706 Inspection Blocks

1 X 2 X 3"

706M Inspection Blocks

25 X 50 X 75MM

These Inspection Blocks are manufactured to precision tolerances, and are of great value for all inspection laboratories and in-shop setups where positioning is important.

- High accuracy
- Hardened steel, ground and lapped
- Matched pair available

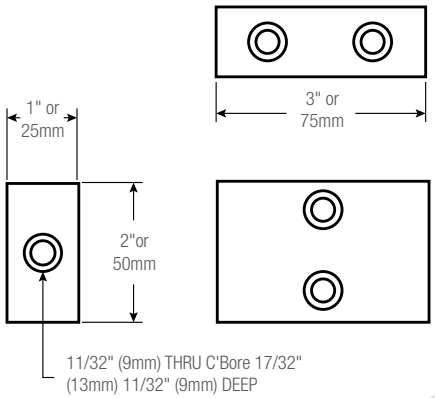

Inch Blocks		
Cat. No.	EDP	Description
706AZ	57121	Single 1 x 2 x 3" block in case
706BZ	57122	Matched pair in case
Millimeter Blocks		
Cat. No.	EDP	Description
706MAZ	64968	Single 25 x 50 x 75mm block in case
706MBZ	64969	Matched pair in case

Specifications	
Block Dimensions	1 x 2 x 3" (25 x 50 x 75mm)
Parallelism	.0001" (0.003mm)
Squareness	.0001 in/in (0.003mm/25mm)
Hardness	RC 63-65
Flatness	.0001" (0.003mm)

706BZ

Digital Tachometer

S7793Z Contact and Non-Contact Digital Tachometer

This Pocket Laser Tachometer (S7793Z) is a digital, battery-powered portable optical tachometer that can operate up to 25 feet from a reflective target using a laser light source. Its ergonomic design allows safe, direct line-of-sight viewing of both target and display at the same time, with a non-slip rubber surface for single hand operation.

Multi-Function

This powerful 32 function Tachometer/Ratemeter, Totalizer/Counter and Timer (stopwatch) is programmable in both inch and metric rates. It has TTL compatible pulse output to trigger devices such as data collectors or stroboscopes.

The kit is supplied with a remote contact assembly including concave and convex tips, a 10cm linear speed wheel, and rugged carrying case.

Features

- Operating range up to 25 feet* (Class 3R visible laser)
- Accepts remote contact assembly
- Accepts remote sensors (optional)
- TTL pulse output
- Auto ranging/fixed decimal (user selectable)
- English and metric rates
- Tripod mounting bushing
- On-target and low battery indicators
- Rugged rubberized housing
- NIST traceable certificate of calibration included

7793 Contact and Non-Contact Digital Tachometer		
Cat. No.	**EDP**	**Description**
S7793Z	68930	Tachometer, RCA, contact tips, 10cm linear contact wheel 5' of T-5 reflective tape, (2) "AA" batteries, latching carrying case

Specifications	
Display	5 Alpha-Numeric LCD
Ranges	
Optical*	5-200,000 RPM
Contact**	0.5-20,000 RPM
Rates 10cm Circumference Contact Wheel	
Inches/Min	1.969-78,740
Feet/Min	0.164-6,561.7
Yards/Min	0.055-2,187.2
Centimeters/Min	5.000-200,000
Meters/Min	0.050-2,000
Totalizer	1-200,000
Accuracy	
Optical	±0.01% of reading
Contact	±0.05% of reading (rpm)
Resolution	0.001-10 RPM
Operating range	2 Inches to 25 feet, ±70º
Memory	Maximum, Minimum, and Last
Power	(2) "AA" 1.5 VDC Batteries (30 Hours)
Environmental	5º - 40ºC (0º - 100ºF) 80% RH up to 31ºC (88ºF)
Size (H x W x D)	6.92 x 2.4 x 1.6" (176 x 61 x 41mm)
Weight	7 oz. (210g)

* Performance subject to intensity of ambient light irradiation
** Also reads units per second and per hour

Kit includes tachometer, RCA, contact tips, 10cm linear contact wheel 5 feet of T-5 reflective tape, (2) "AA" batteries, and latching carrying case

The S7793Z Pocket Laser Tachometer can operate with the remote contact assembly (left) or up to 25 feet from a reflective target (right)

PRECISION MAKES THE DIFFERENCE

IT IS TIME TO UPGRADE YOUR COMBINATION SQUARE?

Starrett combination squares provide the durability and dependability needed for years of unparalleled accuracy and usefulness.

Whether measuring depth, height, angles for miter cuts or using the steel rule as precision straight edge, the Starrett combination square replaces an assortment of single-use tools.

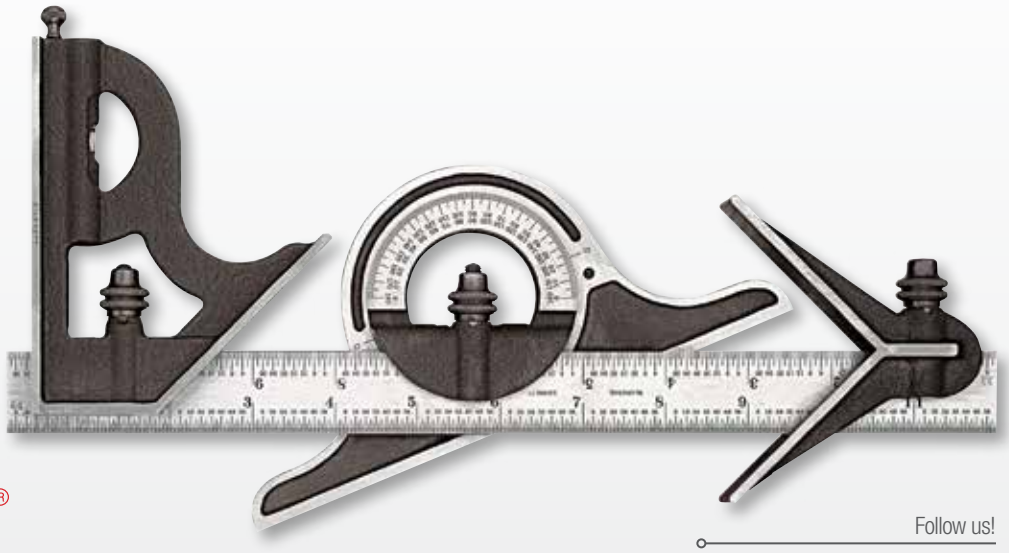

Starrett®

(978) 249-3551 • starrett.com

Follow us!

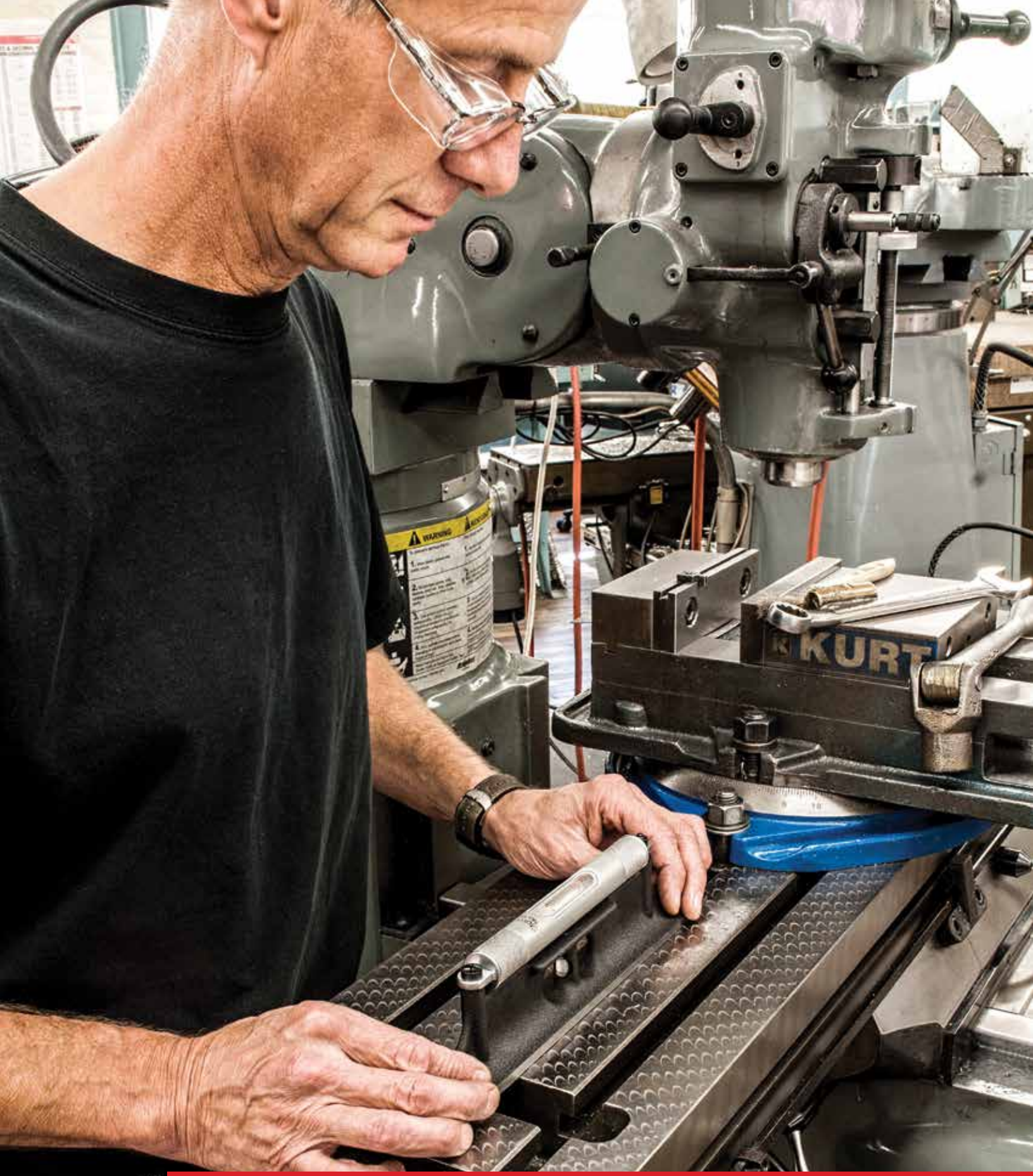

MACHINISTS' LEVELS

Master Precision Levels

199 Master Precision Level

15"/380MM

The efficiency of modern, high speed machinery depends to a large degree upon the levelness of the machine set-up.

- Specially designed to set up, check and test machinery of all types
- At-a-glance reading of the exact variation of machinery levelness
- Ground and graduated main vial of 10-second accuracy; one division equals 1/2 thousandth of an inch (0.0005") per foot, or 0.04mm per meter
- Main vials have seven graduations on each side of the bubble
- Auxiliary level vial shows lateral position and assists in horizontal setting
- Level vials are positioned so breakage is reduced to a minimum
- Special alloy iron used to obtain freedom from thermal effects
- Seasoned, machined castings
- Scraped reference surface
- Nonconductive top plate and black wrinkle finish on nonmachined surfaces
- Finished wood case

199Z

199 Master Precision Level							
		Length Base		Width Base		Height Level	
Cat. No.	EDP	in	mm	in	mm	in	mm
199Z	50719	15	380	1-5/8	40	3	75
199Z W/SLC*	66932						

* Includes redemption card for Standard Letter of Certification (SLC).

Level Use

To get a correct reading with a level, both ends of the bubble should be viewed. If the gaps between the ends of the bubble and the lines are unequal at any time, then they should be averaged out. The reason for this is temperature, which affects the size of the bubble. As a level is warmed the liquid expands, thereby reducing the size of the bubble so that at true-level there will be gaps at both ends between the bubble and the reading lines. Conversely, if the temperature is very cold, the bubble could expand and overlap the reading lines.

Excessive hand heat on the center of the level for an extended period of time could expand the center, causing the working surface to become slightly convex and also create a tendency to spin on flat surfaces. This is more noticeable on very precise levels.

Any level can be checked for accuracy on any flat surface regardless of whether it is level or not. Simply put the level on the surface and note the position of the bubble. Then reverse the level in the same spot. If the level is true, the bubble will be in the same relative position both ways.

Some models, like our 98 machinist levels with an adjustable system, have an adjustment that can be made on the job.

Level Vial Information

The accuracy of a level is dependent on the proper machining of the working surface, the straightness, and rigidity of the construction and the sensitivity of the level vial. Accuracies are very often specified in parts of degrees such as 10-second accuracy or 43-minute accuracy. Technically, we are referring to the sensitivity of the level vial, but many interchange these terms. Since this means little to most people, we use the more practical definition of inches per foot of elevation. For instance, a 10-second vial accuracy means if the level is on an incline that is .0005" per foot, then the bubble on the vial will move .100" (slightly less than 1/8").

There are three general types of level vials. Ground vials are generally used in precision levels; bent glass and plastic vials are used in most other levels.

Most level vials have just two lines spanning the length of the bubble because most users just want to know if something is level or not.

The more precise levels have vials with a number of reading lines on each side of the bubble. All Inch reading vial graduations are .100" apart. This will show the machinist in a very precise manner how level the equipment is.

Metric reading levels have vial graduations 2mm apart and accuracies are usually described as millimeters per meter. This is an easy conversion to make, so we converted our Inch specifications to an understandable metric reading. Machinists only need to know how far they are out of level if the bubble moves to the next line.

199, 98 and 132 Precision Machinists' Levels

These are the finest levels available, used for precision work that is typically required in the industry. They all have these features:

- All level bases are made from the finest quality seasoned cast iron and are precision-machined on the reference surface
- Non-machined surfaces have an attractive, black wrinkle finish
- All models except the 199 have an involute longitudinal groove between the bearing flats for accurate seating on round work. This groove has a special involute design, permitting better centering and greater capacity to handle larger rounds
- Groove and bearing flats are machined together for maximum accuracy

Machinists' Levels

98 Machinists' Levels with Ground and Graduated Vials

4-18"/100-450MM

These levels have ground and graduated main vials. All sizes have a cross test vial except the 4" (100mm) model.

The 12" (300mm) model also has a plumb vial and the 18" (450mm) size has a double plumb vial.

These vials are adjustable to a positive setting and are housed in a satin chrome finished brass tube with a friction-fit closing cover to prevent breakage.

The base of the levels features an involute groove running the length of the base, which provides a reliable seat for round work such as pipes or shafting.

With the cross test vial, it is possible to simultaneously level in both directions. This prevents inaccuracies in the main vial reading caused by canting the level sidewise on round work.

The 6" through 18" (150-450mm) main level vials have graduations that are approximately 80-90 seconds or .005" per foot (0.42mm per meter). There are five, six, or seven lines on each side of the bubble, depending on the base length.

End view showing involute groove

98 Machinists' Levels with Ground and Graduated Vials

Without Case		In Finished Wood Case		Tube and Plug Assemblies		Size		
Cat. No.	EDP	Cat. No.	EDP	Part No.	EDP	in	mm	Description
98-4	50440					4	100	Without cross test vial
98-6	50441			PT99430	64497	6	150	With cross test vial
98-6 W/SLC	66935							With cross test vial, Standard Letter of Certification*
98-8	50442			PT99431	64498	8	200	With cross test vial
98-12	50443	98Z-12	50444	PT99432	64499	12	300	With single plumb vial and cross test vial
98-12 W/SLC	66934	98Z-12 W/SLC	66933					With single plumb vial and cross test vial, Standard Letter of Certification*
98-18	50445	98Z-18	50446			18	450	With double plumb vial and cross test vial

To guarantee extreme accuracy, the length of your level should not be longer than the work you are leveling.
* Includes redemption card for Standard Letter of Certification (SLC)

Precision Bench Levels

132 Precision Bench Levels with Double Plumbs

6-24"/150-600MM

These are moderately priced levels designed for the all-around use of machinists, maintenance and set-up mechanics and carpenters. They are available in a wide range of sizes to suit every requirement.

- The attractive filigree design of these levels provides a lighter weight, and the curved design evenly dissipates excess heat
- The base of the levels has an involute groove running the full length, which provides a reliable seat for round work
- All sizes have a main vial and double plumb vials. Each vial has two graduated lines
- The main vials have approximately 19-minute sensitivity, meaning if the bubble moves 1/8" off the graduated lines, the out-of-level is approximately .080" per foot. If the bubble is off 2mm, then the out-of-level is approximately 4.4mm per meter.

End view showing involute groove

132 Precision Bench Levels

Cat. No.	EDP	Size in	mm	Description
132-6	50562	6	150	With main vial and double plumb vial
132-9	50563	9	225	
132-12	50564	12	300	
132-24	50566	24	600	

To guarantee extreme accuracy, the length of your level should not be longer than the work you are leveling.

132-12

Cross Test Levels

134 Cross Test Level and Plumb

2 X 3"/50 X 75MM

This is an especially useful little level, invaluable for plumbing, approximate squaring and leveling work. Made from brass with nickel finish, all working surfaces are flat and true. The level has two vials at right angles for cross test leveling without moving the tool and a plumb level at the top. An accurate, well-made and reliable tool, it is also very light and compact and can be easily carried in the pocket.

134

134 Cross Test Level				
		Size		
Cat. No.	EDP	in	mm	Description
134	50569	2 x 3	50 x 75	With cross test vials and plumb vial

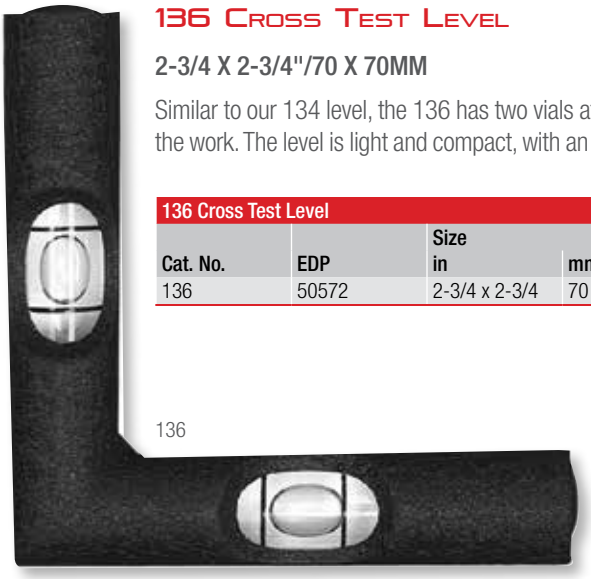
136

136 Cross Test Level

2-3/4 X 2-3/4"/70 X 70MM

Similar to our 134 level, the 136 has two vials at right angles which permit leveling in both directions without moving the level from the work. The level is light and compact, with an attractive black wrinkle finish and a ground reference surface. Made from cast iron.

136 Cross Test Level				
		Size		
Cat. No.	EDP	in	mm	Description
136	50572	2-3/4 x 2-3/4	70 x 70	With cross test vials

Machinists' Levels

130 Bench Level

3-3/8"/85MM

This is a very handy, compact bench level with a sensitive and accurate single vial. The body is made of seasoned cast iron with black wrinkle finish and an accurately machined base leveling surface.

130 Bench Level				
		Size		
Cat. No.	EDP	in	mm	Description
130	50560	3-3/8	85	With main vial

130

135B

135 Pocket Levels with Satin Nickel-Plated Finish

2-1/2 AND 3-1/2"/63 AND 88MM

Another extremely useful Starrett level that fits handily in the pocket with no sharp edges. Made from hexagonal stock with convex ends and satin nickel-plated finish.

135 Pocket Levels with Satin Nickel-Plated Finish				
		Size		
Cat. No.	EDP	in	mm	Description
135A	50570	2-1/2	63	With main vial
135B	50571	3-1/2	88	

STARRETT-WEBBER GAGE BLOCKS

Precision Gage Blocks, Standard Reference Bars

Gage Blocks – Major Product Characteristics

Precision gage blocks are the primary standards vital to dimensional quality control in the manufacture of parts. The four major characteristics that are necessary for a precision gage block are accuracy, surface finish, wear resistance and dimensional stability. Other factors are corrosion resistance, hardness, thermal conductivity and coefficient of expansion.

The base material used for gage blocks is crucial in meeting the above criteria. While many materials have been tried, the major types available today are:

- **Traditional high-grade steel** gage blocks, which are generally used in shop floor environments
- **Tungsten Carbide** gage blocks, which have the advantage of being harder and longer wearing than steel (Not available from Starrett-Webber)
- **Ceramic** gage blocks will outwear regular steel and will not corrode
- **Chromium Carbide** gage blocks are considered the top of the line; the finest available. They outwear regular steel and ceramic. In addition, they will not corrode, are very stable and accurate, and have exceptional "wringing" qualities.

croblox® Chromium Carbide is the superior gage block material. The reason that our Webber Gage Division emphasizes gage blocks made from Chromium Carbide is because they are the most stable measuring devices ever developed.

No one in the world except Starrett-Webber has produced the accuracy and stability of our croblox Grand Masters. They were produced in 1955 of Chromium Carbide material to an accuracy within one millionth of an inch (.0000254mm) and have been checked periodically by the U.S. National Bureau of Standards and the U.S. National Institute of Standards and Technology (NIST) and have remained stable over this period.

Other Characteristics

Accuracy

All Starrett-Webber gage blocks meet or exceed all known specifications. The flatness, parallelism and surface finish necessary to achieve the required accuracies are the same as or better than government requirements.

Stability

Starrett-Webber gage blocks do not change in size except through normal wear. Gage block stability is a characteristic that our Webber Gage Division has mastered with over eighty years of experience. Our gage blocks withstand the test of time.

Hardness

Steel blocks have a Rockwell "C" hardness of approximately 64-65. Chromium Carbide blocks have a Rockwell "C" hardness of 71-73, with an unusually fine, hard grain structure, giving them exceptional resistance to wear and abrasion.

Thermal Conductivity and Coefficient of Expansion

These are not important considerations when measurements are taken in temperature-controlled environments. This is primarily done when measuring to microinches or microns.

On the shop floor, where precision measurements are rarely finer than .0002" or 0.005mm, the coefficient of expansion of steel, chromium carbide and ceramic is so close as to be negligible.

Thermal conductivity is important on the shop floor. However, because it takes time for a gage block to move to the same temperature as the workpiece, we recommend setting the gage block on a heat sink such as a large mass of metal that is at the shop environment temperature.

How To Order Starrett Precision Gage Blocks

Gage Block Sets

1. Order by catalog number.
2. Please specify if you require a Commercial Calibration or Master Calibration. See the catalog page regarding our Accredited Gage Block Calibration Service near the end of this section. A certificate of calibration provides individual readings on each block and provides traceability to NIST. Webber gage block calibrations are NVLAP® accredited by NIST. (We require the end user's name and address to place on the certificate.)
3. Specify if you require special etched serial numbers. We can provide numbers up to a 6-digit maximum. (Our standard practice is to put the same etch number on each block in a set. Blocks are differentiated by their marked size.) If an etched serial number is not specified, we will assign a number that is a coded date.

The buyer of Webber products listed in this catalog agrees to the 100% Relaxed Acceptance Rule contained in ASME B89.7.3.1 (Guidelines for Decision Rules: Considering Measurement Uncertainty in Determining Conformance to Specifications). Products may not be rejected by the purchaser unless his measurements exceed the published tolerances by more than his uncertainty of measurement.

NVLAP® accreditation does not constitute an endorsement of any product by NVLAP® or any agency of the U.S. government.

NVLAP®

NVLAP LAB CODE 200038-0

National Institute of Standards and Technology
National Voluntary Laboratory Accreditation Program

Starrett-Webber Gage Division

24500 Detroit Road
Cleveland, OH 44145
Phone: 440-835-0001
Fax: 440-892-9555
E-mail: sales@starrett-webber.com

DIMENSIONAL NVLAP Code: 20/D03 Gage Blocks

Individual Gage Blocks

1. **Specify Shape**, signified by the following symbols:
   - **Rectangular**
   - **Square**
   - **Heavy Duty**

2. **Specify Material** (croblox®, steel, or ceramic)
3. **Specify Unit of Measure** (inch or metric)
4. **Specify the Size**
5. **Specify Special Lengths**, if applicable (Rectangular Only)
   - Thin block sets (28 pc. inch and 17 pc. metric) are all 1.115" (28.3mm) long. Specify "SS" length.
   - .050", .100", and .150" blocks in inch 81-92 pc. sets are 1.380" long. Specify the Long length, "L".
   - .100" blocks contained in the 36, 38, and 43 pc. sets are 1.380" long. Specify the Long length, "L".
6. **Specify Accuracy Grade** (see next page)
7. **Specify if you require a Commercial, Master or Laboratory Calibration*.** See the catalog page regarding our Accredited Gage Block Calibration Service near the end of this section. A certificate of calibration provides individual readings on each block and provides traceability to NIST. Webber gage block calibrations are NVLAP® accredited by NIST. (We require the end user's name and address to place on the certificate.)

   * Commercial calibrations are included in the price of gage blocks. Master calibrations are done at extra cost. Laboratory calibrations are done at extra cost and are restricted to Webber croblox® rectangular style gage blocks of grades LM, AA, GGG grades 0.5 and 1, and B89 Grades 00 and K.
8. **Specify if you require special etched serial numbers.** We can provide up to a 6-digit maximum. If an etched serial number is not specified, we will assign a number that is a coded date.

Gage Block Tolerances

Gage Block Tolerances: B89.1.9

Inch System: Tolerances expressed in microinches (.000001") 1 millionth of an inch									
	Order Webber Grade LM			Order Webber Grade AA B89.1.9 Grade 00			Order Webber Grade A1 B89.1.9 Grade 0		
	Size Tolerance	Variation in Length Tolerance	Flatness Tolerance	Size Tolerance	Variation in Length Tolerance	Flatness Tolerance	Size Tolerance	Variation in Length Tolerance	Flatness Tolerance
Thru .050"	+1.2/-1.2	1.2	1.2	+4/-4	2	2	+6/-6	4	4
Thru .400"	+1.2/-1.2	1.2	1.2	+3/-3	2	2	+5/-5	4	4
Thru 1"	+1.2/-1.2	1.2	1.2	+3/-3	2	2	+6/-6	4	4
Thru 2"	+2.0/-2.0	1.2	1.2	+4/-4	2	2	+8/-8	4	4
Thru 3"	+3.0/-3.0	1.2	1.2	+5/-5	3	Rect.: 2, Sq.: 3	+10/-10	4	4
Thru 4"	+4.0/-4.0	1.2	1.2	+6/-6	3	Rect.: 2, Sq.: 3	+12/-12	5	4
Thru 5"				+8/-8	3	Rect.: 2, Sq.: 3	+16/-16	5	4
Thru 6"				+8/-8	3	Rect.: 2, Sq.: 3	+16/-16	5	4
Thru 7"				+10/-10	4	4	+20/-20	6	6
Thru 8"				+10/-10	4	4	+20/-20	6	6
Thru 10"				+12/-12	4	4	+24/-24	6	6
Thru 12"				+14/-14	4	4	+28/-28	7	6
Thru 16"				+18/-18	5	4	+36/-36	8	6
Thru 28"				+20/-20	6	4	+44/-44	10	6

	Not Available from Webber B89.1.9 Grade AS1			Not Available from Webber B89.1.9 Grade AS2		
	Size Tolerance	Variation in Length Tolerance	Flatness Tolerance	Size Tolerance	Variation in Length Tolerance	Flatness Tolerance
Thru .050"	+12/-12	6	6	+24/-24	12	10
Thru .400"	+8/-8	6	6	+18/-18	12	10
Thru 1"	+12/-12	6	6	+24/-24	12	10
Thru 2"	+16/-16	6	6	+32/-32	12	10
Thru 3"	+20/-20	6	6	+40/-40	14	10
Thru 4"	+24/-24	8	6	+48/-48	14	10
Thru 5"	+32/-32	8	6	+64/-64	16	10
Thru 6"	+32/-32	8	6	+64/-64	16	10
Thru 7"	+40/-40	10	7	+80/-80	16	10
Thru 8"	+40/-40	10	7	+80/-80	16	10
Thru 10"	+48/-48	10	7	+104/-104	18	10
Thru 12"	+56/-56	10	7	+112/-112	20	10
Thru 16"	+72/-72	12	7	+144/-144	20	10
Thru 20"	+88/-88	14	7	+176/-176	24	10

B89.1.9 Grade 00 exceeds DIN, ISO, BS Grades K

Material Coefficients of Thermal Expansion are:
Chromium Carbide 4.7 x 10-6 inch/ºF per inch
SAE 52100 Steel 6.4 x 10-6 inch/ºF per inch
Ceramic 5.5 x 10-6 inch/ºF per inch

Suggested Replacement Grades for GGG-G-15C		
GGG-G-15C Grade	Webber Grade	B89.1.9 Grade
0.5	LM	—
1	AA	0
2	A1	0
3	A	AS1

The above replacement grades are suggested in B89.1.9. However, the tolerances specified in GGG-G-15C and B89.1.9 are not exactly the same. Gage blocks meeting B89.1.9 specifications may not meet GGG-G-15C requirements and vice versa.

Metric System: Tolerances expressed in micrometers (0.001mm)									
	Order Webber Grade LM			Order Webber Grade A1 B89.1.9 Grade 0			Order Webber Grade AA B89.1.9 Grade 00		
	Size Tolerance	Variation in Length Tolerance	Flatness Tolerance	Size Tolerance	Variation in Length Tolerance	Flatness Tolerance	Size Tolerance	Variation in Length Tolerance	Flatness Tolerance
Thru 0.5mm	+.03/-.03	.03	.03	+.10/-.10	.05	.05	+.14/-.14	.10	.10
Thru 10mm	+.03/-.03	.03	.03	+.07/-.07	.05	.05	+.12/-.12	.10	.10
Thru 25mm	+.04/-.04	.03	.03	+.07/-.07	.05	.05	+.14/-.14	.10	.10
Thru 50mm	+.05/-.05	.03	.03	+.10/-.10	.06	.05	+.20/-.20	.10	.10
Thru 75mm	+.08/-.08	.03	.03	+.12/-.12	.07	Rect (.05), Sq. (.07)	+.25/-.25	.12	.10
Thru 100mm	+.10/-.10	.03	.03	+.15/-.15	.07	Rect (.05), Sq. (.07)	+.30/-.30	.12	.10
Thru 125mm				+.20/-.20	.08	Rect (.05), Sq. (.07)	+.40/-.40	.14	.10
Thru 150mm				+.20/-.20	.08	Rect (.05), Sq. (.07)	+.40/-.40	.14	.10
Thru 175mm				+.25/-.25	.09	.10	+.50/-.50	.16	.15
Thru 200mm				+.25/-.25	.09	.10	+.50/-.50	.16	.15
Thru 250mm				+.30/-.30	.10	.10	+.60/-.60	.16	.15
Thru 300mm				+.35/-.35	.10	.10	+.70/-.70	.18	.15
Thru 400mm				+.45/-.45	.12	.10	+.90/-.90	.20	.15
Thru 500mm				+.50/-.50	.14	.10	+1.1/-1.1	.25	.15

	Not Available from Webber B89.1.9 Grade AS1			Not Available from Webber B89.1.9 Grade AS2		
	Size Tolerance	Variation in Length Tolerance	Flatness Tolerance	Size Tolerance	Variation in Length Tolerance	Flatness Tolerance
Thru 0.5mm	+.30/-.30	.16	.15	+.60/-.60	.30	.25
Thru 10mm	+.20/-.20	.16	.15	+.45/-.45	.30	.25
Thru 25mm	+.30/-.30	.16	.15	+.60/-.60	.30	.25
Thru 50mm	+.40/-.40	.18	.15	+.80/-.80	.30	.25
Thru 75mm	+.50/-.50	.18	.15	+1.0/-1.0	.35	.25
Thru 100mm	+.60/-.60	.20	.15	+1.2/-1.2	.35	.25
Thru 125mm	+.80/-.80	.20	.15	+1.6/-1.6	.40	.25
Thru 150mm	+.80/-.80	.20	.15	+1.6/-1.6	.40	.25
Thru 175mm	+1.0/-1.0	.25	.18	+2.0/-2.0	.40	.25
Thru 200mm	+1.0/-1.0	.25	.18	+2.0/-2.0	.40	.25
Thru 250mm	+1.2/-1.2	.25	.18	+2.4/-2.4	.45	.25
Thru 300mm	+1.4/-1.4	.25	.18	+2.8/-2.8	.50	.25
Thru 400mm	+1.8/-1.8	.30	.18	+3.6/-3.6	.50	.25
Thru 500mm	+2.2/-2.2	.35	.18	+4.4/-4.4	.60	.25

B89.1.9 Grade 00 exceeds DIN, ISO, BS Grades K

Material Coefficients of Thermal Expansion are:
Chromium Carbide 8.5 x 10-6 m/ºC per m
SAE 52100 Steel 11.5 x 10-6 m/ºC per m
Ceramic 9.9 x 10-6 m/ºC per m

Suggested Replacement Grades for GGG-G-15C		
GGG-G-15C Grade	Webber Grade	B89.1.9 Grade
0.5	LM	—
1	AA	0
2	A1	0
3	A	AS1

The above replacement grades are suggested in B89.1.9. However, the tolerances specified in GGG-G-15C and B89.1.9 are not exactly the same. Gage blocks meeting B89.1.9 specifications may not meet GGG-G-15C requirements and vice versa.

Gage Block Sets

Rectangular Inch System Gage Block Sets, Individual Blocks and Accessories

All sets are furnished in a handsome, rugged wood case for lasting protection

INCH

Rectangular croblox® Gage Block Sets in Case

Cat. No.	Accuracy Grade*	Measuring Range	Blocks Per Set	Blocks Included In Sets
RC 81.A1 RC 81.AA RC 81.LM**	B89.1.9 0 B89.1.9 00 Webber LM	.100-12.000 in Steps of .001 .200-12.000 in Steps of .0001	81	9 Blocks .1001 Through .1009 (Steps of .0001) 49 Blocks .101 Through .149 (Steps of .001) 19 Blocks .050 Through .950 (Steps of .050) 4 Blocks 1.000 Through 4.000 (Steps of 1")
RC 88.A1 RC 88.AA RC 88.LM**	B89.1.9 0 B89.1.9 00 Webber LM	.100-12.000 in Steps of .001 .200-12.000 in Steps of .0001 .300-12.000 in Steps of .000025 1/16-12.000 in Steps of 1/64	88	Same as in RC 81. Set, Plus 3 Blocks .100025, .10005, .100075 4 Blocks 1/16, 5/64, 3/32, 7/64
RC 34.A1 RC 34.AA RC 34.LM**	B89.1.9 0 B89.1.9 00 Webber LM	.200-8.000 in Steps of .001 .300-8.000 in Steps of .0001	34	9 Blocks .1001 Through .1009 (Steps of .0001) 9 Blocks .101 Through .109 (Steps of .001) 9 Blocks .110 Through .190 (Steps of .010) 3 Blocks .100 Through .300 (Steps of .100) 1 Block .500 3 Blocks 1.000, 2.000 and 4.000
RC 28.A1 RC 28.AA	B89.1.9 0 B89.1.9 00	.020-.240 in Steps of .001 .040-.240 in Steps of .0001 .060-.240 in Steps of .00005	28	1 Block .02005 9 Blocks .0201 Through .0209 (Steps of .0001) 9 Blocks .021 Through .029 (Steps of .001) 9 Blocks .010 Through .090 (Steps of .010)

For gage block accessories, order AC 11.A Accessory Set in Case. Sets include etched serial numbers and Commercial Calibration Certificate. A Master Calibration Certificate is available at extra cost.
* For complete accuracy specifications, see the beginning of this section.
** Available by special order only.

Gage Block Sets

Rectangular Inch System Gage Block Sets, Individual Blocks and Accessories

Our Ceramic Gage Blocks, offered in rectangular, inch and metric, fill the gap between steel and the universally accepted croblox®. While not as stable as croblox®, ceramic is an excellent alternative to steel because of its superior hardness, thermal expansion and wear characteristics.

INCH

Rectangular Ceramic Gage Block Sets in Case				
Cat. No.	**Accuracy Grade***	**Measuring Range**	**Blocks Per Set**	**Blocks Included In Sets**
RY 81.A1 RY 81.AA	B89.1.9 0 B89.1.9 00	.100-12.000 in Steps of .001 .200-12.000 in Steps of .0001	81	9 Blocks .1001 Through .1009 (Steps of .0001) 49 Blocks .101 Through .149 (Steps of .001) 19 Blocks .050 Through .950 (Steps of .050) 4 Blocks 1.000 Through 4.000 (Steps of 1")
RY 88.A1 RY 88.AA	B89.1.9 0 B89.1.9 00	.100-12.000 in Steps of .001 .200-12.000 in Steps of .0001 .300-12.000 in Steps of .000025 1/16-12.000 in Steps of 1/64	88	Same as in RY 81. Set, Plus 3 Blocks .100025, .10005, .100075 4 Blocks 1/16, 5/64, 3/32, 7/64
RY 34.A1 RY 34.AA	B89.1.9 0 B89.1.9 00	.200-8.000 in Steps of .001 .300-8.000 in Steps of .0001	34	9 Blocks .1001 Through .1009 (Steps of .0001) 9 Blocks .101 Through .109 (Steps of .001) 9 Blocks .110 Through .190 (Steps of .010) 3 Blocks .100 Through .300 (Steps of .100) 1 Block .500 3 Blocks 1.000, 2.000 and 4.000

Sets include etched serial number and Commercial Calibration Certificate. A Master Calibration Certificate is available at extra cost.
* For complete accuracy specifications, see the beginning of this section.

INCH

Rectangular Steel Gage Block Sets in Case			B89.1.9 Accuracy Grade 0*
Cat. No.	**Measuring Range**	**Blocks Per Set**	**Blocks Included In Sets**
RS 81.A1	.100-12.000 in Steps of .001 .200-12.000 in Steps of .0001	81	9 Blocks .1001 Through .1009 (Steps of .0001) 49 Blocks .101 Through .149 (Steps of .001) 19 Blocks .050 Through .950 (Steps of .050) 4 Blocks 1.000 Through 4.000 (Steps of 1")
RS 88.A1	.100-12.000 in Steps of .001 .200-12.000 in Steps of .0001 .300-12.000 in Steps of .000025 1/16-12.000 in Steps of 1/64	88	Same as in RS 81.A1 Set, Plus 3 Blocks .100025, .10005, .100075 4 Blocks 1/16, 5/64, 3/32, 7/64
RS 92.A1	.100-12.000 in Steps of .001 .200-12.000 in Steps of .0001 .300-12.000 in Steps of .000025 1/16-12.000 in Steps of 1/64	92	Same as in RS 88.A1 Set, Plus 2 Blocks .100" (croblox® Wear Blocks) 2 Blocks .050 (croblox® Wear Blocks)
RS 38.A1	.100-4.000 in Steps of .001 .150-4.000 in Steps of .0001 .200-4.000 in Steps of .00005	38	2 Blocks .050 (croblox® Wear Blocks) 1 Block .05005 9 Blocks .0501 Through .0509 (Steps of .0001) 9 Blocks .051 Through .059 (Steps of .001) 11 Blocks .050 Through .150 (Steps of .010) 4 Blocks .200 Through .500 (Steps of .100) 2 Blocks 1.000 and 2.000
RS 34.A1	.200-8.000 in Steps of .001 .300-8.000 in Steps of .0001	34	9 Blocks .1001 Through .1009 (Steps of .0001) 9 Blocks .101 Through .109 (Steps of .001) 9 Blocks .110 Through .190 (Steps of .010) 4 Blocks .100, .200, .300, .500 3 Blocks 1.000, 2.000, 4.000
RS 28.A1	.020-.240 in Steps of .001 .040-.240 in Steps of .0001 .060-.240 in Steps of .00005	28	1 Block .02005 9 Blocks .0201 Through .0209 (Steps of .0001) 9 Blocks .021 Through .029 (Steps of .001) 9 Blocks .010 Through .090 (Steps of .010)
RS 9.A1	.0625-4.000 in Steps of .0625 .100-4.000 in Steps of .100	9	1 Block .0625, .100, .125, .200, .250, .300, .500, 1.000, 2.000
Micrometer Checking Set			**B89.1.9 Accuracy Grade AS1***
Cat. No.	**Measuring Range**	**Blocks Per Set**	**Blocks Included In Sets**
RS 10.A		10	10 blocks .105, .210, .315, .420, .500, .605, .710, .815, .920, 1.000

For gage block accessories, order AC 11.A Accessory Set in Case. See rectangular block accessories on the next page. Sets include etched serial numbers and Commercial Calibration Certificate. A Master Calibration Certificate is available at extra cost.
* For complete accuracy specifications, see the beginning of this section.

Gage Block Sets

MicroAccurate® B-Grade Rectangular Steel Gage Block Sets in Case

These B-Grade gage block sets are Starrett Global products. Their very affordable price makes them ideal for general shop floor use.

- Etched, unique serial numbers are included on each block. Custom numbers are not available.
- Sets available with a choice of two types of certificates of calibration as described below
- Inch System sets have a tolerance of ±50µin.
- Metric System sets have a tolerance of ±1.25µm.

RS 81.B

INCH AND METRIC

MicroAccurate® Inch System Sets			
Cat. No.	**Measuring Range**	**Blocks Per Set**	**Blocks Included In Sets**
RS 81.B RS 81.W	.100-12.000 in steps of .001 .200-12.000 in steps of .0001	81	9 blocks .1001 through .1009 (steps of .0001) 49 blocks .101 through .149 (steps of .001) 19 blocks .050 through .950 (steps of .050) 4 blocks 1.000 through 4.000 (steps of 1)
MicroAccurate® Metric System Sets			
Cat. No.	**Measuring Range**	**Blocks Per Set**	**Blocks Included In Sets**
RS 88.MB RS 88.MW	3.0 through 450 in .0005 steps 2.0 through 450 in .001 steps 1.0 through 450 in .01 steps 1.0 through 450 in .1 steps	88	1 block .5 1 block 1.0005 9 blocks 1.001 through 1.009 (steps of .001) 49 blocks 1.01 through 1.49mm (steps of .01) 18 blocks 1 through 9.5 (steps of .5) 10 blocks 10 through 100 (steps of 10)
RS 112.MB RS 112.MW	3.0 through 250 in .0005 steps 2.0 through 250 in .001 steps 1.0 through 250 in .01 steps 1.0 through 250 in .1 steps	112	1 block .5 1 block 1.0005 9 blocks 1.001 through 1.009 (steps of .001) 49 blocks 1.01 through 1.49 (steps of .01) 48 blocks 1 through 24.5 (steps of .5) 4 blocks 25 through 100 (steps of 25)

Specifications	
Cat. No.	**Features**
RS 81.B RS 88.MB RS 112.MB	Calibration performed at Webber Gage in Cleveland, OH. Certificate of Calibration with NVLAP® accreditation. Calibration in accordance with ISO 17025 with dated calibration certificate and NIST traceability number. The name and address of the user may be added to the calibration certificate. **Inch System (RS 81.B)** uncertainty of measurement (k=2): U = 6 + L where L is in inches, but U not less than 7 min. **Metric Systems (RS 88.MB and RS 112.MB)** uncertainty of measurement (k=2): U = 0.15 + .001L where L is in millimeters, but U not less than 0.18 µm.
RS 81.W RS 88.MW RS 112.MW	Calibration performed in China in partnership with Webber Gage. Webber Gage samples the measurements to monitor the calibration results. Calibrations are traceable to NIST, but no NIST traceability number or dates will be given. The name and addrress of the user will be left blank on the calibration certificate. **Inch System (RS 81.W)** uncertainty of measurement (k=2): 10 µin. **Metric Systems (RS 88.MW and RS 112.MW)** uncertainty of measurement (k=2): U = 0.25 µm.

Gage Block Accessories

AC11..MA

INCH

Rectangular croblox® Wear Blocks	
Cat. No.	Size
RC .020 WA1	0.020
RC .050 WA1	0.050
RC .100 WA1	0.100

Rectangular Inch System Steel and croblox® Accessories Individually or Sets as Stated Below			
Individual Accessories			
Description	Cat. No. Steel	croblox®	Steel Accessories Included Set AC 11.A
Half-Round Jaw			
.250 Radius	RA 1.		2**
Straight Jaw*			
.250" Thick	RA 4.	RA 24.	2**
Clamps			
0" – 1-1/2" Capacity	RA 5.		1
1-1/2" – 4" Capacity	RA 6.		1
4" – 6-1/2" Capacity	RA 7.		1
0" – 12" Capacity	RA 8.		1
Scriber Point	RA 11.		1
Center Point, 100 C/L	RA 12.		1
Base Block 1" Thick	RA 13.		1
Case (CS 9111.)			1

Additional Accessories	
Cat. No.	Description
	Clamps
RA 9.	0-18" Capacity
RA 10.	0-24" Capacity
RA 14.	0-36" Capacity
	Half-Round Jaws
RA 2.	.200 Radius
RA 3.	.100 Radius

* croblox jaws available as an option at extra cost. Please specify.
** Jaws are normally used in pairs, but are ordered individually. Please order accordingly.

INCH

Square croblox® – Inch System Gage Block Sets in Case				
Cat. No.	Accuracy Grade*	Measuring Range	Blocks Per Set	Blocks Included In Sets
SC 81.A1 SC 81.AA	B89.1.9 0 B89.1.9 00	.100-12.000 in Steps of .001 .200-12.000 in Steps of .0001	81	9 blocks .1001 through .1009 (Steps of .0001) 49 blocks .101 through .149 (Steps of .001) 19 blocks .050 through .950 (Steps of .050) 4 blocks 1.000 through 4.000 (Steps of 1)
SC 88.A1 SC 88.AA	B89.1.9 0 B89.1.9 00	.100-12.000 in Steps of .001 .200-12.000 in Steps of .0001 .300-12.000 in Steps of .000025 1/16-12.000 in Steps of 1/64	88	Same as in SC 81. Set, Plus 3 blocks .100025, .10005, .100075 4 blocks 1/16, 5/64, 3/32, 7/64
SC 36.A1 SC 36.AA	B89.1.9 0 B89.1.9 00	.200-8.000 in Steps of .001 .300-8.000 in Steps of .0001	36	1 Block .050 9 blocks .1001 through .1009 (Steps of .0001) 9 blocks .101 through .109 (Steps of .001) 9 blocks .110 through .190 (Steps of .010) 5 blocks .100 through .500 (Steps of .100) 3 blocks 1.000, 2.000, 4.000

All Square croblox® sets above are available with accessories at extra cost. To order, add "X" to catalog number. Accessories are furnished in steel (see following pages). Sets include etched serial numbers and Commercial Calibration Certificate. A Master Calibration Certificate is available at extra cost.
* For complete accuracy specifications, see the beginning of this section.

Gage Block Sets

Inch System Individual Gage Block Sets in Case

SC88.A1X

INCH

Square Steel Gage Block Sets in Case			B89.1.9 Accuracy Grade 0*
Cat. No.	**Measuring Range**	**Blocks Per Set**	**Blocks Included In Sets**
SS 81.A1	.100-12.000 in steps of .001 .200-12.000 in steps of .0001	81	9 blocks .1001 through .1009 (steps of .0001) 49 blocks .101 through .149 (steps of .001) 19 blocks .050 through .950 (steps of .050) 4 blocks 1.000 through 4.000 (steps of 1") Above set also available with accessories** (extra)
SS 88.A1	.100-12.000 in steps of .001 .200-12.000 in steps of .0001 .300-12.000 in steps of .000025 1/16-12.000 in steps of 1/64	88	Same as in SS 81.A1 Set, Plus 3 blocks .100025, .10005, .100075 4 blocks 1/16, 5/64, 3/32, 7/64 Above set also available with accessories** (extra)
SS 36.A1	.200-8.000 in steps of .001 .300-8.000 in steps of .0001	36	1 Block .050 9 blocks .1001 through .1009 (steps of .0001) 9 blocks .101 through .109 (steps of .001) 9 blocks .110 through .190 (steps of .010) 5 blocks .100 through .500 (steps of .100) 3 blocks 1.000, 2.000 and 4.000 Above set also available with accessories** (extra)
SS 28.A1	.020-.240 in steps of .001 .040-.240 in steps of .0001 .060-.240 in steps of .00005	28	1 block .02005 9 blocks .0201 through .0209 (steps of .0001) 9 blocks .021 through .029 (steps of .001) 9 blocks .010 through .090 (steps of .010)
SS 8.A1X	5.000-84 in steps of 1.000	8	8 blocks 5, 6, 7, 8, 10, 12, 16, 20 Accessories Included: 6 each SA 8. Studs 2 each SA 9. flat head screws (long) 2 each SA 10. flat head screws (short) 1 each SA 16. 4-1/2 - 6" tie rod (adjustable) 1 each SA 17. 6-9" tie rod (adjustable) 1 each SA 18. 11-3/4" tie rod 1 each SA 19. 15-3/4" tie rod 2 each SA 20. 19-3/4" tie rods
Square Steel Gage Block Sets in Case			**B89.1.9 Accuracy Grade 00***
Cat. No.	**Measuring Range**	**Blocks Per Set**	**Blocks Included In Sets**
SS 8.AAX	5.000-84 in steps of 1.000	8	Same as above SS 8.A1X

* For complete accuracy specifications, see page at the beginning of this section.

** All square steel sets 34 through 88 are available with Accessories at extra cost. To order, add "X" to catalog number. Accessories are steel. See square block Accessories on the next page. Sets include etched serial numbers and Commercial Calibration Certificate. A Master Calibration Certificate is available at extra cost.

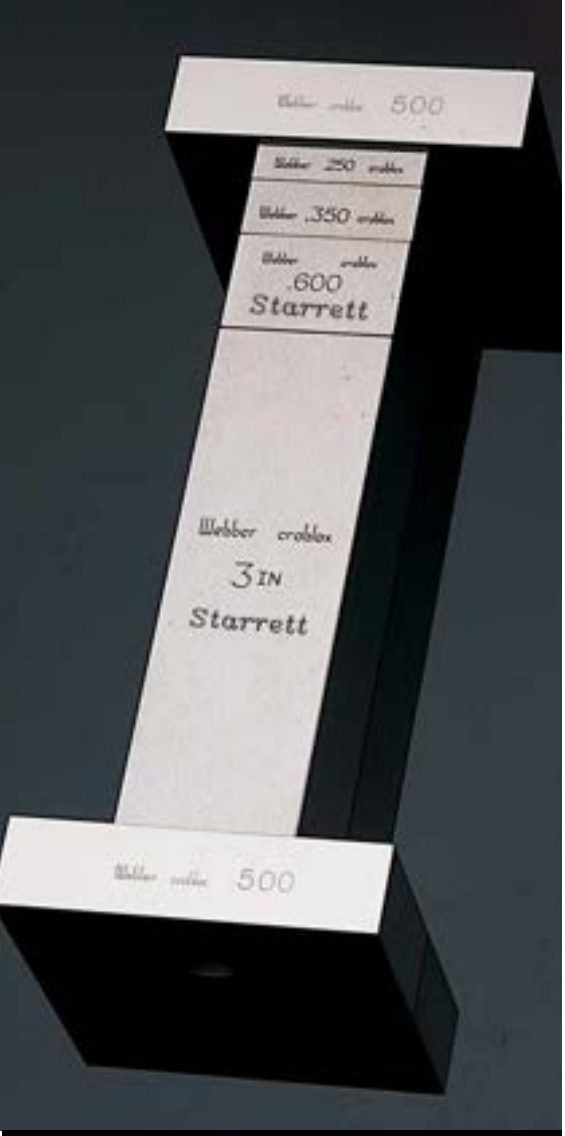

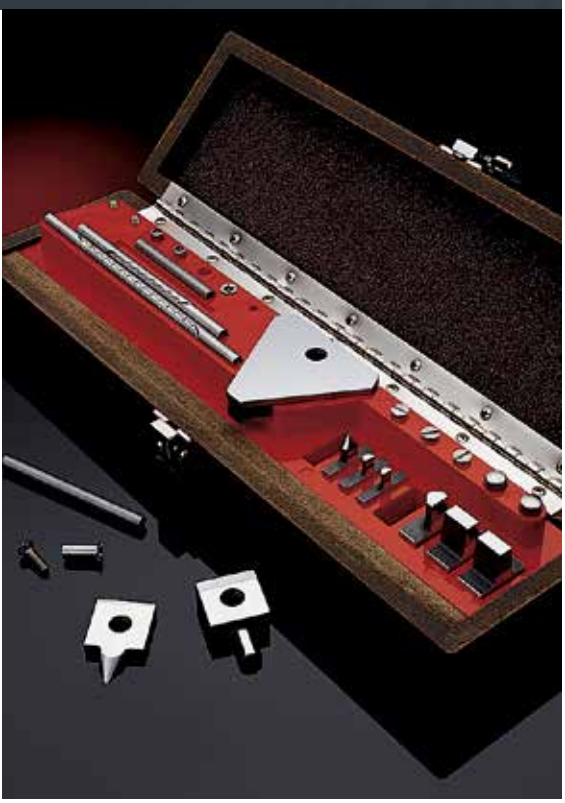

Gage Block Accessories

SA 707. Steel Internal Measuring Machine Jaws

Jaws are double-ended, self-proving, assuring parallelism and squareness. Designed for use with square style gage blocks. Jaws are made of hardened steel material, 2.000" long, 1.000" wide and .500" thick. Both side edges are lapped 90º square to the gaging faces within 30 seconds of arc and extend beyond the gage blocks in the combination, thus forming a square master.

Jaw and gage combination parallelism is quickly checked merely by turning the combination to the opposite side and rechecking the reading. Furnished in pairs.

Additional Accessories	
Cat. No.	**Description**
	Tie Rods
SA 18.	11-3/4" Solid
SA 19.	15-3/4" Solid
SA 20.	19-3/4" Solid

Square Gage Block Accessories Steel and croblox®

INCH

Square Steel Accessories Individually or Sets as Stated Below			
Individual Accessories		**Steel Accessories Included**	
Description	**Cat. No.**	**Set SA 25.A and 81 thru 88 Block Sets when Ordered with Accessories**	**34 and 36 Block Sets when Ordered with Accessories**
Half-Round Jaw*			
.125 Radius	SA 1.	2	
.250 Radius	SA 2.	2	2
Straight Jaw*			
.500" Thick	SA 3.	2	
Scriber Point	SA 4.	1	1
Center Point, .100 C/L	SA 5.	1	
Base Block .500 Thick	SA 6.	1	
Knurled Screw	SA 7.	2	2
Stud	SA 8.	2	2
Flat Head Screw			
Long	SA 9.	2	2
Short	SA 10.	2	2
Slotted Nut	SA 11.	2	2
Tie Rods			
3/4" Solid	SA 12.	1	1
1-1/2" Solid	SA 13.	1	1
2-1/4" Solid	SA 14.	1	1
3" Solid	SA 15.	1	1
4-1/2-6" Adjust	SA 16.	1	1
6-9" Adjust	SA 17.	1	
Case (CS9168)		(For SA 25.A Only)	

*Jaws are normally used in pairs, but are ordered individually. Please order accordingly.

Gage Blocks

Individual Rectangular Gage Blocks

INCH

HOW TO ORDER

Rectangular Block Sizes

- Width: all blocks are .352" wide
- Length: for blocks under .050", length is 1.115"
- For blocks with .050" through .190", length is 1.180"
- For blocks .200" and above, length is 1.380"

Exceptions

- 28 block sets with blocks to .090" are all 1.115" long
- .050, .060, .070, .080, .090" blocks in this set are listed with the suffix "ss".
- .050, .100, .150" blocks contained in the 81–92-piece sets are 1.380" long. Specify "long length".
- .100" blocks contained in the 36, 38, and 43-block sets are 1.380" long. Specify "long length".

Specify in this Sequence: Shape, Material, Size and Accuracy Grade			
Shape	**Material**	**Size**	**Accuracy**
R=Rectangular S=Square	S=Steel C=croblox Y=Ceramic	Listed in table	Listed in table

Example: RS .250A1 = Rectangular Steel block, size .250, Grade A1 Accuracy

croblox®, Ceramic and Steel Gage Blocks	croblox®		Ceramic		Steel
Grade	A1 0	AA 00	A1 0	AA 00	A1 0
0.010	•	•			•
0.0101					•
.0101 Through .0109 in Steps of .0001					•
.011 Through .019 in Steps of .001					•
.020 (Wear Blocks)	•				
.020 or .02005	•	•			•
.0201 Through .0209 in Steps of .0001	•	•			•
.021 Through .029 in Steps of .001	•	•			•
0.03	•	•			•
0.04	•	•			•
.050 long*	•	•	•	•	•
.050 (Wear Blocks)	•				
.050S or .050SS	•	•			•
0.0501					•
.0501 Through .0509 in Steps of .0001					•
.051 Through .059 in Steps of .001					•
.060 or .060SS	•	•			•
.0625 (1/16)	•	•	•	•	•
.070 or .070SS	•	•			•
.078125 (5/64)	•	•	•	•	•
.080 or .080SS	•	•			•
.090 or .090SS	•	•			•
.09375 (3/32)	•	•	•	•	•
.100 long*	•	•	•	•	•
.100 (Wear Blocks)	•				
.100S	•	•	•	•	•
0.1000	•	•	•	•	•
0.1001	•	•	•	•	•
0.1001	•	•	•	•	•
.1001 Through .1009 in Steps of .0001	•	•	•	•	•
.101 Through .109 in Steps of .001	•	•	•	•	•
.109375 (7/64)	•	•	•	•	•
.110 Through .119 in Steps of .001	•	•	•	•	•
.120 Through .129 in Steps of .001	•	•	•	•	•
.130 Through .139 in Steps of .001	•	•	•	•	•
.140 Through .149 in Steps of .001	•	•	•	•	•
.150 Long*	•	•	•	•	•
0.15	•	•	•	•	•
.160 Through .190 in Steps of .010	•	•	•	•	•
.200, .250, .300, .350	•	•	•	•	•
.400, .450, .500, .550, .600	•	•	•	•	•
.650, .700, .750	•	•	•	•	•
.800, .850, .900, .950	•	•	•	•	•
1.000	•	•	•	•	•
2.000	•	•	•	•	•
3.000	•	•	•	•	•
4.000	•	•	•	•	•
5.000					•
6.000					•

* Order long length for Webber set replacements.

Gage Blocks

Individual Square Gage Blocks

INCH

HOW TO ORDER

Square Block Size

- All square blocks are .950" x .950"
- Blocks have a .265" hole in the center
- On blocks .200" thick and over, the hole is countersunk on both faces (croblox® Wear Blocks are countersunk on one face only)

Specify in this sequence: Shape, Material, Size and Accuracy Grade			
Shape	**Material**	**Size**	**Accuracy**
R=Rectangular S=Square	S=Steel C=croblox	Listed in table	Listed in table

Example: SS .125A1 = Square Steel block, size .125 with a Grade A1 accuracy

croblox® and Steel Gage Blocks	croblox®		Steel	
Grade	A1 0	AA 00	A1 0	AA 00
0.010			•	
0.020			•	
0.0201			•	
.0201 Through .0209 in Steps of .0001			•	
.021 Through .029 in Steps of .001			•	
0.030			•	
0.040			•	
0.050	•	•	•	
0.060			•	
.0625 (1/16)	•	•	•	
0.070			•	
.078125 (5/64)	•	•	•	
0.080			•	
0.090			•	
.09375 (3/32)	•	•	•	
0.100	•	•	•	
.100 (Wear with Chamfered Hole)	•			
0.1000	•	•	•	
0.1001	•	•	•	
0.1001	•	•	•	
.1001 Through .1009 in Steps of .0001	•	•	•	
.101 Through .149 in Steps of .001	•	•	•	
.109375 (7/64)	•	•	•	
.150 Through .190 in Steps of .010	•	•	•	
0.200	•	•	•	
0.250	•	•	•	
0.300	•	•	•	
0.350	•	•	•	
.400, .450, .500, .550	•	•	•	
.600, .650, .700, .750	•	•	•	
.800, .850, .900, .950	•	•	•	
1.000	•	•	•	
2.000	•	•	•	
3.000	•	•	•	
4.000	•	•	•	
5.000			•	•
6.000			•	•
7.000			•	•
8.000			•	•
10.000			•	•
12.000			•	•
16.000			•	•
20.000			•	•

Gage Blocks

Heavy-Duty Steel Gage Block Sets and Accessories

GAGING AREA 17/32 X 1-1/2"

These heavy-duty gage block sets are primarily used for assembling together into exclusive Webber fixtures.

Precision "yardsticks" and height gages can be built up to a required dimension by wringing blocks together and then by the use of eccentric clamps, locking them into place. All blocks over 1" long have 1/4" holes that accept eccentric clamps. All blocks 6" or larger have an insulated center grip to eliminate temperature variations caused by handling.

Precision scribers and dividers for tool layout can be created in a few seconds. The center point is on a .500" center line of a 1" block. The scriber point may be sharpened indefinitely without altering the original accuracy.

Snap gages with inside or outside calipers can be easily assembled using accessories like the eccentric clamps, a quick-acting clamp, and a pair of half-round or straight jaws.

HD46.A1X

INCH

Snap gage is used to check inside dimensions of ring gage still mounted in internal grinder

Building up blocks into precision "yardsticks"

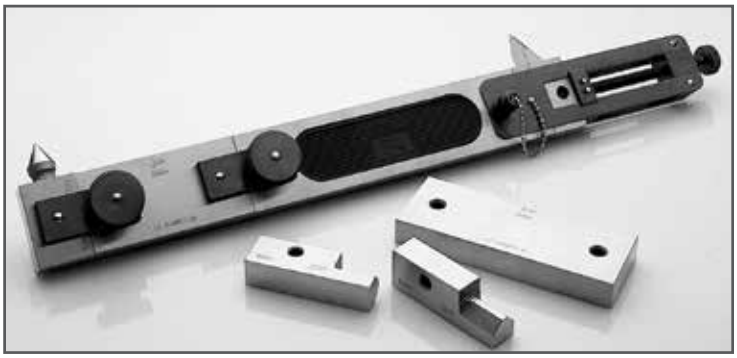

Precision scribers, dividers and snap gages

Accessory Sets

Indicator Accessory Set

This heavy-duty accessory mounts on any build-up of heavy-duty blocks and measures the deviation of the work from nominal or desired size. (Indicator is set and checked for zero by placing blocks on any known flat surface.)

HDA 10 and HDA 12 Indicator Accessory Sets consist of a holding block, extension jaw and a precision Starrett indicator. See catalog description below for indicator ranges and graduations.

Eccentric clamps are used for combining long blocks

INCH

Indicator Accessory Set

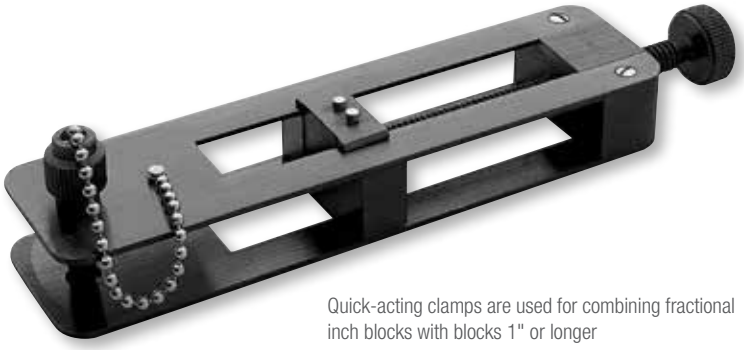

Quick-acting clamps are used for combining fractional inch blocks with blocks 1" or longer

Heavy-Duty Steel Accessories Individually or Sets as stated below		
Individual Accessories		**Steel Accessories Included in all 42 thru 46 Piece Sets or 84 Piece Set when ordered with Accessories**
Description	**Cat. No.**	
Half-Round Jaw* .500 Radius	HDA 1.	2
Scriber Point	HDA 2.	1
Center Point .500 C/L	HDA 3.	1
Eccentric Clamp	HDA 4.	(See set description next page for qty.)
Quick-Acting Clamp	HDA 5.	1
Base Block 1.500" Thick	HDA 6.	1

Additional Accessories	
Individual Accessories	
Description	**Cat. No.**
Straight Jaw* 1.000 Thick	HDA 820.
Indicator Set Consisting of: Indicator Holding Block Extension Jaw (1.000" Thick) Indicator with ±.010" Range, .0005" Graduations Case	HDA 10.
Indicator Set As Above Except: Indicator with ±.0015" Range, .00005" Graduations	HDA 12.

* Jaws are normally used in pairs, but are ordered individually. Please order accordingly.

Wear Blocks

croblox® Wear Blocks in .050" and .100" sizes are available for use with heavy-duty blocks.

croblox® Wear Blocks	
Cat. No.	**Size**
HDC .050 WA1	.050"
HDC .100 WA1	.100"

Gage Block Sets and Accessories

Heavy-Duty Steel

INCH

Gage Block Sets and Accessories			B89.1.9 Accuracy Grade 0*
Cat. No.	**Measuring Range**	**Blocks Per Set**	**Blocks included In Sets**
HD 84.A1	.100-12.000 in steps of .001 .200-12.000 in steps of .0001 .300-12.000 in steps of .00005	84	2 blocks .100 Wear croblox® 1 block .10005 9 blocks .1001 through .1009 (steps of .0001) 49 blocks .101 through .149 (steps of .001) 19 blocks .050 through .950 (steps of .050) 4 blocks 1.000 through 4.000 (steps of 1) 3 eccentric clamps Above set also available with 2 additional eccentric clamps and accessories** (extra)
HD 46.A1X	.200-48.000 in steps of .001 .300-48.000 in steps of .0001	46	9 blocks .1001 through .1009 (steps of .0001) 9 blocks .101 through .109 (steps of .001) 9 blocks .110 through .190 (steps of .010) 9 blocks .100 through .900 (steps of .100) 4 blocks 1.000 through 4.000 (steps of 1) 6 blocks 6.000 10 eccentric clamps and accessories** (included)
HD 44.A1X	.200-36.000 in steps of .001 .300-36.000 in steps of .0001	44	9 blocks .1001 through .1009 (steps of .0001) 9 blocks .101 through .109 (steps of .001) 9 blocks .110 through .190 (steps of .010) 9 blocks .100 through .900 (steps of .100) 4 blocks 1.000 through 4.000 (steps of 1) 4 blocks 6.000 8 eccentric clamps and accessories** (included)
HD 42.A1X	.200-24.000 in steps of .001 .300-24.000 in steps of .0001	42	9 blocks .1001 through .1009 (steps of .0001) 9 blocks .101 through .109 (steps of .001) 9 blocks .110 through .190 (steps of .010) 9 blocks .100 through .900 (steps of .100) 4 blocks 1.000 through 4.000 (steps of 1) 2 blocks 6.000 6 eccentric clamps and accessories** (included)

Sets include etched serial numbers and Commercial Calibration Certificate. A Master Calibration Certificate is available at extra cost.
Case for HD 84.A1 has space for accessories and six 6.000" heavy-duty blocks. To order with accessories, add "X" to catalog number.
* For complete accuracy specifications, see page at the beginning of this section.
** See previous page for accessories.

Individual Heavy-Duty Gage Blocks – Steel Only
Block Size
0.050
.100, .100025, .10005, .100075
.1001 Through .1009 In Steps of .0001
.101 Through .149 In Steps of .001
.150 Through .190 In Steps of .010
.200 Through .950 In Steps of .050
1.000
2.000
3.000
4.000
6.000
10.000
20.000

To order individual blocks, specify HD followed by size and accuracy grade. Example: HD .050 A1

Gage Block Sets

Metric System Gage Block Sets, Individual Blocks and Accessories

The following pages include these metric system items in the order shown:

Rectangular gage blocks and accessories

Square gage blocks and accessories

Metric rectangular 88 piece and square 112 sets are shown

RS 9.MA1 Mini-Metric Rectangular Steel Gage Block Set

This mini-metric set of precision gage blocks calibrates micrometers, vernier gages and similar measuring tools. The gage blocks are also useful as setting masters for comparator-type dimensional gages and are useful in teaching the basics of metric measurement.

The set has a capacity of 61mm in 1, 0.5mm or 0.25mm steps. Its nine hardened steel blocks include these sizes: 1, 2, 2.25, 2.5, 3, 5, 10, 15 and 25mm. They are finished to B89.1.9 Accuracy Grade 0 and are furnished in a lined metal case.

Metric set RS 9.MA1

Gage Block Sets

Rectangular croblox® Gage Block Sets in Case

METRIC

Rectangular croblox Gage Block Sets in Case, One Millimeter Base				
Cat. No.	**Accuracy Grade***	**Measuring Range**	**Blocks Per Set**	**Blocks Included In Sets**
RC 45.MA1 RC 45.MAA	B89.1.9 0 B89.1.9 00	3.0 through 450 (steps of .001) 2.0 through 450 (steps of .01) 1.0 through 450 (steps of .1)	45	9 blocks 1.001mm through 1.009mm (steps of .001) 9 blocks 1.01mm through 1.09mm (steps of .01) 9 blocks 1.1mm through 1.9mm (steps of .1) 9 blocks 1mm through 9mm (steps of 1) 9 blocks 10mm through 90mm (steps of 10)
RC 88.MA1 RC 88.MAA	B89.1.9 0 B89.1.9 00	3.0 through 450 (steps of .0005) 2.0 through 450 (steps of .001) 1.0 through 450 (steps of .01) 1.0 through 450 (steps of .1)	88	1 block .5 1 block 1.0005 9 blocks 1.001mm through 1.009 (steps of .001) 49 blocks 1.01mm through 1.49 (steps of .01) 18 blocks 1mm through 9.5mm (steps of .5) 10 blocks 10mm through 100mm (steps of 10)
RC 112.MA1 RC 112.MAA	B89.1.9 0 B89.1.9 00	3.0 through 250 (steps of .0005) 2.0 through 250 (steps of .001) 1.0 through 250 (steps of .01) 1.0 through 250 (steps of .1)	112	1 block .5 1 block 1.0005 9 blocks 1.001 through 1.009 (steps of .001) 49 blocks 1.01 through 1.49 (steps of .01) 48 blocks 1mm through 24.5mm (steps of .5) 4 blocks 25mm through 100mm (steps of 25)

Sets include etched serial numbers and Commercial Calibration Certificate. Metric croblox® Wear Blocks and/or Master Calibration Certificate are available at extra cost. For gage block accessories, order AC 11.MA Metric Accessory Set in Case.

* For complete accuracy specifications, see page at the beginning of this section.

Set RY 88.MA1

METRIC

Rectangular Ceramic

Now there's another addition to the famous Starrett-Webber line of precision gage blocks. Ceramic, offered in rectangular, inch and metric, fills the gap between steel and the universally accepted croblox®. While not as stable as croblox®, ceramic is an excellent alternative to steel because of its superior hardness, thermal expansion and wear characteristics.

Gage Block Sets in Case				
Cat. No.	**Accuracy Grade***	**Measuring Range**	**Blocks Per Set**	**Blocks Included In Sets**
RY 45.MA1 RY 45.MAA	B89.1.9 0 B89.1.9 00	3.0 through 450 in .001 steps 2.0 through 450 in .01 steps 1.0 through 450 in .1 steps	45	9 blocks 1.001 through 1.009 (steps of .001) 9 blocks 1.01 through 1.09 (steps of .01) 9 blocks 1.1 through 1.9 (steps of .1) 9 blocks 1 through 9 (steps of 1) 9 blocks 10 through 90 (steps of 10)
RY 88.MA1 RY 88.MAA	B89.1.9 0 B89.1.9 00	3.0 through 450 in .0005 steps 2.0 through 450 in .001 steps 1.0 through 450 in .01 steps 1.0 through 450 in .1 steps	88	1 block .5 1 block 1.0005 9 blocks 1.001 through 1.009 (steps of .001) 49 blocks 1.01 through 1.49 (steps of .01) 18 blocks 1 through 9.5 (steps of .5) 10 blocks 10 through 100 (steps of 10)

Sets include etched serial numbers and Commercial Calibration Certificate. A Master Calibration Certificate is available at extra cost.

* For complete accuracy specifications, see page at the beginning of this section.

Gage Block Sets

Rectangular Steel – Metric System

METRIC

One Millimeter Base

Gage Block Sets in Case			B89.1.9 Accuracy Grade 0*
Cat. No.	**Measuring Range**	**Blocks Per Set**	**Blocks Included In Sets**
RS 9.MA1	1.0 through 61.0 in 1.0 steps 2.0 through 61.0 in .5 steps 4.0 through 61.0 in .25 steps	9	3 blocks 1.0, 2.0, 2.25 4 blocks 2.5, 3.0, 5.0, 10.0 2 blocks 15.0, 25.0
RS 45.MA1	3.0 through 450 in .001 steps 2.0 through 450 in .01 steps 1.0 through 450 in .1 steps	45	9 blocks 1.001 through 1.009 (steps of .001) 9 blocks 1.01 through 1.09 (steps of .01) 9 blocks 1.1 through 1.9 (steps of .1) 9 blocks 1 through 9 (steps of 1) 9 blocks 10 through 90 (steps of 10)
RS 88.MA1	3.0 through 450 in .0005 steps 2.0 through 450 in .001 steps 1.0 through 450 in .01 steps 1.0 through 450 in .1 steps	88	1 block .5 1 block 1.0005 9 blocks 1.001 through 1.009 (steps of .001) 49 blocks 1.01 through 1.49 (steps of .01) 18 blocks 1 through 9.5 (steps of .5) 10 blocks 10 through 100 (steps of 10)
RS 112.MA1	3.0 through 250 in .0005 steps 2.0 through 250 in .001 steps 1.0 through 250 in .01 steps 1.0 through 250 in .1 steps	112	1 block .5 1 block 1.0005 9 blocks 1.001 through 1.009 (steps of .001) 49 blocks 1.01 through 1.49 (steps of .01) 48 blocks 1 through 24.5 (steps of .5) 4 blocks 25 through 100 (steps of 25)
Micrometer Checking Set			**B89.1.9 Accuracy Grade AS1***
Cat. No.	**Measuring Range**	**Blocks Per Set**	**Blocks Included In Sets**
RS 10.MA		10	10 blocks 2.5, 5.1, 7.7, 10.3, 12.9, 15.0, 17.6, 20.2, 22.8, 25.0

Sets include etched serial numbers and Commercial Calibration Certificate. Metric croblox® Wear Blocks and/or Master Calibration Certificate are available at extra cost.
For gage block accessories, order AC 11.MA Metric Accessory Set in Case.
See rectangular metric block accessories on the next page.
* For complete accuracy specifications, see page at the beginning of this section.

Rectangular Gage Block Accessories Steel and croblox®

AC11.MA

Rectangular croblox Wear Blocks	
Cat. No.	**Size**
RCM 1.0 WA1	1.0
RCM 2.0 WA1	2.0

Rectangular Steel and croblox Accessories Individually or Sets as Stated Below			
Individual Accessories			
Description	**Cat. No. Steel**	**croblox®**	**Steel Accessories Included Set AC 11.MA**
Half-Round Jaw			
5mm Radius	RA 101.		2**
Straight Jaw*			
5mm Thick	RA 104.	RA 204.	2**
Clamps			
0-38mm Capacity	RA 5.		1
38-100mm Capacity	RA 6.		1
100-165mm Capacity	RA 7.		1
0-300mm Capacity	RA 8.		1
Scriber Point	RA 11.		1
Center Point, 2mm C/L	RA 112.		1
Base Block, 25mm Thick	RA 113.		1
Case (CS 9111.)			1
Additional Accessories			
Individual Accessories			
Description	**Cat. No. Steel**	**croblox®**	**Steel Accessories Included Set AC 11.MA**
Clamps			
0-450mm Capacity	RA 9.		
0-600mm Capacity	RA 10.		
0-900mm Capacity	RA 14.		

* croblox jaws available as an option at extra cost. Please specify.
** Jaws are normally used in pairs, but are ordered individually. Please order accordingly.

Gage Block Sets

Square Combination croblox® and Steel Metric System Gage Block Sets in Case

METRIC

An ideal combination of value, price and convenience, these sets include a popular selection of croblox® and steel as listed.

Gage Block Sets in Case, Two Millimeter Base			B89.1.9 Accuracy Grade 0*
Cat. No.	**Measuring Range**	**Blocks Per Set**	**Blocks** Included in Sets**
S2CS 45.MA1	6.0 through 450 in .001 steps 4.0 through 450 in .01 steps 2.0 through 450 in .1 steps	45	1 block 1.0 - steel 9 blocks 2.001 through 2.009 (steps of .001) 9 blocks 2.01 through 2.09 (steps of .01) 9 blocks 2.1 through 2.9 (steps of .1mm) 9 blocks 1.0 through 9.0 (steps of 1.0mm) 8 blocks 10 through 90 (steps of 10mm) - steel
S2CS 88.MA1	6.0 through 450 in .0005 steps 4.0 through 450 in .001 steps 2.0 through 450 in .01 steps 2.0 through 450 in .1 steps	88	2 blocks .5 and 1.0 - steel 1 block 2.0005 9 blocks 2.001 through 2.009 (steps of .001) 49 blocks 2.01 through 2.49 (steps of .01) 18 blocks 1.5 through 10.0 (steps of .5) 9 blocks 20 through 100 (steps of 10) - steel
S2CS 112.MA1	6.0 through 250 in .0005 steps 4.0 through 250 in .001 steps 2.0 through 250 in .01 steps 2.0 through 250 in .1 steps	112	2 blocks .5 and 1.0 - steel 1 block 2.0005 9 blocks 2.001 through 2.009 (steps of .001) 49 blocks 2.01 through 2.49 (steps of .01) 18 blocks 1.5 through 10.0 (steps of .5) 29 blocks 10.5 through 24.5 (steps of .5) - steel 4 blocks 25m through 100 (steps of 25) - steel
S2C 77.MA1	6.0 through 300 in .0005 steps 4.0 through 300 in .001 steps 2.0 through 300 in .01 steps 2.0 through 300 in .1 steps	77	5 blocks .5, 1.0, 1.5, 2.0, 2.0005 9 blocks 2.001 through 2.009 (steps of .001) 50 blocks 2.01 through 2.50 (steps of .01) 5 blocks 3.0, 3.5, 4.0, 4.5, 5.0 5 blocks 10, 15, 20, 25, 30 3 blocks 50, 75, 100
			B89.1.9 Accuracy Grade 00*
Cat. No.	**Measuring Range**	**Blocks Per Set**	**Blocks** Included in Sets**
S2C 77.MAA	6.0 through 300 in .0005 steps 4.0 through 300 in .001 steps 2.0 through 300 in .01 steps 2.0 through 300 in .1 steps	77	Same as above S2C 77.MA1

Metric croblox® Wear Blocks are available as option. Sets include etched serial numbers and Commercial Calibration Certificate. A Master Calibration Certificate is available at extra cost.
* For complete accuracy specifications, see page at the beginning of this section.
** All blocks are croblox, except as noted.

Steel SA 711. Internal Measuring Machine Jaws

Double ended, self proving - assures parallelism and squareness. Designed for use with square style gage blocks, jaws are made of hardened steel 50.8mm long, 25.4mm wide and 12mm thick. Both side edges are lapped 90º square to the gaging faces within 30 seconds of arc and extend beyond the gage blocks in the combination, thus forming a square master.

Jaw and gage combination parallelism is checked merely by turning the combination to the opposite side and rechecking the reading. Furnished in pairs.

SA712 and SA711

Gage Block Sets

Square Steel – Metric System Gage Block Sets in Case

METRIC

Gage Block Sets in Case, Two Millimeter Base			B89.1.9 Accuracy Grade 0*
Cat. No.	**Measuring Range**	**Blocks Per Set**	**Blocks Included in Sets**
S2S 45.MA1	6.0 Through 450 in .001 Steps 4.0 Through 450 in .01 Steps 2.0 Through 450 in .1 Steps	45	1 Block 1.0 9 Blocks 2.001 Through 2.009 (Steps of .001) 9 Blocks 2.01 Through 2.09 (Steps of .01) 9 Blocks 2.1 Through 2.9 (Steps of .1) 9 Blocks 2.0 Through 10.0 (Steps of 1.0) 8 Blocks 20 Through 90 (Steps of 10)
S2S 77.MA1	6.0 Through 300 in .0005 Steps 4.0 Through 300 in .001 Steps 2.0 Through 300 in .01 Steps 2.0 Through 300 in .1 Steps	77	5 Blocks .5, 1.0, 1.5, 2.0, 2.0005 9 Blocks 2.001 Through 2.009 (Steps of .001) 50 Blocks 2.01 Through 2.50 (Steps of .01) 5 Blocks 3.0, 3.5, 4.0, 4.5, 5.0 5 Blocks 10, 15, 20, 25, 30 3 Blocks 50, 75, 100
S2S 88.MA1	6.0 Through 450 in .0005 Steps 4.0 Through 450 in .001 Steps 2.0 Through 450 in .01 Steps 2.0 Through 450 in .1 Steps	88	2 Blocks .5, 1.0 1 Block 2.0005 9 Blocks 2.001 Through 2.009 (Steps of .001) 49 Blocks 2.01 Through 2.49 (Steps of .01) 18 Blocks 1.5 Through 10.0 (Steps of .5) 9 Blocks 20 Through 100 (Steps of 10)
S2S 112.MA1	6.0 Through 250 in .0005 Steps 4.0 Through 250 in .001 Steps 2.0 Through 250 in .01 Steps 2.0 Through 250 in .1 Steps	112	1 Block .5 1 Block 2.0005 9 Blocks 2.001 Through 2.009 (Steps of .001) 49 Blocks 2.01 Through 2.49 (Steps of .01) 48 Blocks 1.0 Through 24.5 (Steps of .5) 4 Blocks 25 Through 100 (Steps of 25)
SS 8.MA1X	125 to 2100	8	8 Blocks 125, 150, 175, 200, 250, 300, 400, 500 Accessories Included: 6 Each SA 8. Studs 2 Each SA 9. Flat Head Screws (long) 2 Each SA 10. Flat Head Screws (short) 1 Each SA 16. 114-152 Tie Rod (adjustable) 1 Each SA 17. 152-228 Tie Rod (adjustable) 1 Each SA 18. 298 Tie Rod 1 Each SA 19. 400 Tie Rod 2 Each SA 20. 502 Tie Rods
			B89.1.9 Accuracy Grade 00*
Cat. No.	**Measuring Range**	**Blocks Per Set**	**Blocks Included in Sets**
SS 8.MAAX	125 to 2100	8	Same as Above SS 8.MA1X

Sets include etched serial numbers and Commercial Calibration Certificate. A Master Calibration Certificate is available at extra cost.
* For complete accuracy specifications, see page at the beginning of this section.

Gage Block Sets

Square Steel or croblox® – Metric System Gage Block Accessories

METRIC

Square Steel Accessories Individually or Sets as Stated Below		
Individual Accessories	**Cat. No.**	**Steel Accessories Included**
Half-Round Jaw**		
3mm Radius	SA 101.	2
6mm Radius	SA 102.	2
Straight Jaw**		
12mm Thick	SA 103.	2
Scriber Point	SA 4.	1
Center Point 2mm C/L	SA 105.	1
Base Block 12mm Thick	SA 106.	1
Knurled Screw	SA 7.	2
Stud	SA 8.	2
Flat Head Screw		
Long	SA 9.	2
Short	SA 10.	2
Slotted Nut	SA 11.	2
Tie Rods		
19mm Solid	SA 12.	1
38mm Solid	SA 13.	1
57mm Solid	SA 14.	1
76mm Solid	SA 15.	1
114-152mm Adjustable	SA 16.	1
152-228mm Adjustable	SA 17.	1
Case (CS 9168.)		1
Additional Accessories		
Individual Accessories	**Cat. No.**	
Tie Rods		
298mm	SA 18.	
400mm	SA 19.	
502mm	SA 20.	

** croblox® jaws available as an option at extra cost. Please specify.
** Jaws are normally used in pairs, but are ordered individually. Please order accordingly.

Square croblox® Wear Blocks	
Cat. No.	**Size**
SCM 2.0 WA1	2.0mm with 1 Side Countersunk

Gage Block Sets

Individual Rectangular and Square Gage Blocks - Metric System

croblox®, CERAMIC AND STEEL

Rectangular Block Sizes

- Width: all blocks are 9mm wide
- Length: For blocks 10mm thick and under, length is 30mm
  For blocks 10.5mm thick and above, length is 35mm

Exceptions:

*Blocks are 28.3mm long

** When ordering 0.5mm block, specify length (28.3 or 30mm)

Individual Rectangular Gage Blocks	croblox®		Ceramic		Steel
	A1	AA	A1	AA	A1
Size/Millimeters Grade	0	00	0	00	0
0.3, 0.4*					•
0.5**	•	•	•	•	•
0.6 Through 0.9 in .1 Steps*					•
1.0 or 1.0005	•	•	•	•	•
1.0 Wear Blocks	•				
1.001 Through 1.009 in Steps of .001	•	•	•	•	•
1.01 Through 1.14 in Steps of .01	•	•	•	•	•
1.15 Through 1.49 in Steps of .01	•	•	•	•	•
1.5 Through 1.9 in Steps of .1	•	•	•	•	•
2.0	•	•	•	•	•
2.0 Wear Blocks	•				
2.25					•
2.5	•	•	•	•	•
3.0 Through 4.5 in Steps of .5	•	•	•	•	•
5.0 Through 6.5 in Steps of .5	•	•	•	•	•
7.0 Through 10.0 in Steps of .5	•	•	•	•	•
10.5 Through 14.5 in Steps of .5	•	•			•
15.0	•	•	•	•	•
15.5 Through 19.5 in Steps of .5	•	•			•
20.0	•	•	•	•	•
20.5 Through 24.5 in Steps of .5	•	•			•
25.0 and 30.0	•	•	•	•	•
40.0	•	•	•	•	•
50.0	•	•	•	•	•
60.0	•	•	•	•	•
70.0	•	•	•	•	•
75.0 and 80.0	•	•	•	•	•
90.0	•	•	•	•	•
100.0	•	•	•	•	•

Square Block Sizes

- All blocks are 24.1mm x 24.1mm
- Blocks have a 6.7mm hole in the center
- On blocks 5.0mm thick and over, the hole is countersunk on both faces. (croblox Wear Blocks are countersunk on one face only)

Individual Square Gage Blocks	croblox®		Steel	Steel Only	
	A1	AA	A1	A1	AA
Size/Millimeters Grade	0	00	0	0	00
0.5 mm	•	•	•		
1.0	•	•	•		
1.5	•	•	•		
2.0 Wear Blocks with 1 Side Countersunk	•				
2.0 or 2.0005	•	•	•		
2.001 Through 2.009 in .001 Steps	•	•	•		
2.01 Through 2.49 in .01 Steps	•	•	•		
2.5 Through 2.9 in .1 Steps	•	•	•		
3.0 Through 10.0 in .5 Steps	•	•	•		
10.5 Through 14.5 in .5 Steps			•		
15mm	•	•	•		
15.5 Through 19.5 in .5 Steps			•		
20.0mm	•	•	•		
20.5 Through 24.5 in .5 Steps			•		
25.0	•	•	•		
30.0	•	•	•		
40.0			•		
50.0	•	•	•		
60.0			•		
70.0			•		
75.0	•	•	•		
80.0			•		
90.0			•		
100.0	•	•	•		
125.0				•	•
150.0				•	•
175.0				•	•
200.0				•	•
250.0				•	•
300.0				•	•
400.0				•	•
500.0				•	•

How To Order

Specify in this sequence: Shape, Material, "M" for Metric, Size and Accuracy Grade			
Shape	Material	Size	Accuracy
R=Rectangular S=Square	S=Steel C=croblox® Y = Ceramic	Listed in table	Listed in table

Example: RSM 2.0.A1 = Rectangular Steel block, Metric size 2.0, Grade A1 Accuracy

Reference Bars

Standard Reference Bars

12", 19", 25", 37", 49"/300, 500, 650, 950, 1250MM

These Standard Reference Bars are invaluable for use in checking table movement of machine tools, accuracy of vernier height gages, surface plate transfer measurement, and for final inspection of precision machine tools and coordinate measuring machines.

The "channel design" places additional measuring pads at appropriate points over the length of the bar as reference points for x, y or z axis measurements. Channel design permits use of the bar on its base (vertical), or on its back, or either side (horizontal). The alternating gage block jaws and spacer blocks are permanently wrung and fastened together to form 1" increments for inch bars and 25mm increments for metric bars.

A special bushing arrangement allows the master stack to conform to thermal conditions prevailing during use, thus providing a true master even under less than perfect laboratory conditions. Mating surfaces are treated during assembly to prevent corrosion.

Non-standard lengths and measuring increments are available on special order. A Certificate of Calibration is included. All models are furnished with storage case.

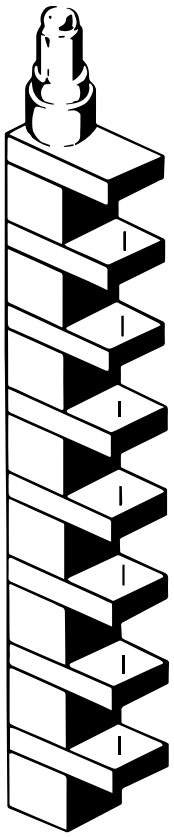

With Channel Design					
Inch System			Millimeter System		
Cat. No.	EDP	Size	Cat. No.	EDP	Size
RBC 12.	92626	12"	RBCM 300.	93642	300mm
RBC 19.	92627	19"	RBCM 500.	92617	500mm
RBC 25.	92628	25"	RBCM 650.	93053	650mm
RBC 37.	92629	37"	RBCM 950.	92619	950mm
RBC 49.	92630	49"	RBCM 1250.	92620	1250mm
Free Standing Stack Without Channel Design – Vertical Position Only					
Inch System			Millimeter System		
Cat. No.	EDP	Size	Cat. No.	EDP	Size
RB 8.	92616	8"	RBM 200.	93261	200mm
RB 10.	92623	10"	RBM 250.	93262	250mm
RB 12.	92624	12"	RBM 300.	93263	300mm
RB 18.	92625	18"	RBM 450.	93264	450mm

Specifications		
Description	Inch System	Millimeter System
Tolerance (Stack)	expressed in µin.	expressed in µm
Maximum:	2.5L + 10L in inches	.0025L + .25L in millimeters
Minimum:	- 10	- .25
Parallelism: Gage Surfaces to Base and Each Other	15µin.	0.4µm
Uncertainty of Calibration	10 + 2.0L in inches expressed in µin.	.25 + .002L in millimeters expressed in µm.

The accuracy of the surface that supports the gage must be taken into account when determining the accuracy of any measurements.

Standard Sizes are 12", 19", 25", 37" and 49" in the inch system and 300mm, 500mm, 650mm, 950mm and 1250mm in the millimeter system

AG 18.W

AG 16.R

Gage Block Sets

Angle Gage Block Sets

Angle Gage Blocks permit fast, simple and accurate measurements of any angle. They are far superior to sine bar measuring methods, that involve trigonometric formulae and complex stacks of gage blocks.

Angle gage blocks come in three accuracies: croblox® Reference Angle Blocks with a 1-second accuracy, steel Calibration Grade Angle Blocks with 2-second accuracy, and steel Working Grade Angle Blocks with 5-second accuracy. Each grade can be purchased in sets that will measure in steps of one-second, one-minute or one-degree to suit any need. (See angle block specification information on next two pages.)

- **Reference Angle Blocks croblox: 1-second accuracy.** Designed for optical or as reference standards for autocollimators, spectrometers, etc. They are unsurpassed for use in aerospace, optical, and precision instrument fields.
- **Calibration Angle Blocks Steel: 2-second accuracy.** The same high quality as the Reference Grade Angle Blocks.
- **Working Angle Blocks Steel: 5-second accuracy.** These angles are designed for shop or tool room. The longer gaging surfaces are made for use with an indicator. These blocks reduce set-up time and minimize error in grinding both simple and compound angles.

Angle Gage Block Sets in Case				
Cat. No.	**Description/Accuracy Grade**	**Blocks Per Set**	**Measuring Range**	**Blocks Included In Sets**
AG 6.R AG 6.C	Reference Grade ±1.0 Second Calibration Grade ±2.0 Seconds	6	0-99º in 1° Steps	6 Blocks: 1°, 3°, 5°, 15°, 30°, 45°
AG 11.R AG 11.C	Reference Grade ±1.0 Second Calibration Grade ±2.0 Seconds	11	0-99º in 1' Steps	6 Blocks: 1°, 3°, 5°, 15°, 30°, 45° 5 Blocks: 1', 3', 5', 20', 30'
AG 16.R AG 16.C	Reference Grade ±1.0 Second Calibration Grade ±2.0 Seconds	16	0-99º in 1" Steps	6 Blocks: 1°, 3°, 5°, 15°, 30°, 45° 5 Blocks: 1', 3', 5', 20', 30' 5 Blocks: 1", 3", 5", 20", 30"
Cases for Angle Gage Block Sets				
Cat. No.	**Description**			
CS 9135	Calibration Set and Reference Case			

* One 6" (150mm) parallel and one 6" (150mm) knife edge are included with Working Grade Sets in addition to the listed sizes.

To Order Individually, Specify in the Following Key Sequence:			
Angle Gage Prefix	**Numeric Size of Angle**	**Angle Units (Degree, Min., Sec.)**	**Accuracy Grade R or C**
AG	45	D	R

Example: AG 45.DR = a Reference 45º Angle Block
AG 30. MC = Calibration Grade 30' Angle Block

NOTE: The catalog numbers and specifications of our angle gage blocks have been changed in response to updated requirements concerning the application of the uncertainty of measurement. See the next two pages for information regarding the specifications of our angle blocks.

Webber Gage Blocks

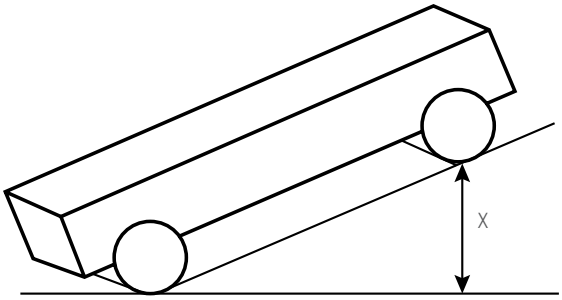

Using Angle Gage Blocks

SUPERIOR TO SINE BAR METHODS

A precision angle has always been difficult to set because of the involved trigonometric formula that is used with the sine bar.

The main difficulty lies in the dimension X in diagram, which often results in a figure with many decimal places. Gage blocks can only approximate this value. For example, to measure 44º 30' using a 5" sine bar the following steps are required:

Sine for 44º 30' angle	.7009093
For dimension X multiply by 5	3.5045465
	.1005
	.104
Gage Blocks necessary to match this dimension	.300
	3.000
	3.5045

3.5045465 – 3.5045 = Residual error .0000465
This error cannot be eliminated in sine bar procedure.

With angle gage blocks, you take a 45º block from the set, wring on a 30' block so that the plus end of 45º block contacts the minus end of 30' block, and you have an angle of 44º 30'. It is not only easy to accomplish, it is absolutely accurate.

Ease and Versatility

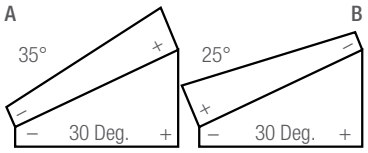

A set consisting of only 16 blocks will measure 356,400 angles in steps of one second, to an accuracy of 1/5,000,000th of a circle! These micro-accurate blocks can be used in either plus or minus positions. In example **"A"**, take the 30º angle and add the 5º angle to obtain a measurement of 35º (making sure that both plus ends are together). In **"B"**, use the same two blocks but wring them together so that the minus end of the 5º block is over the plus end of the 30º block. This will subtract 5º from 30º, thus giving a 25º measurement.

Indexing a Large Rotary Table

A Webber Angle Block or True Square is positioned on the work and a beam of light from an autocollimator is directed against the gaging surface. This becomes 0º, or the reference surface. Other angle blocks are then added in proper combination to measure each succeeding angle. The table is rotated and inspected at each position with reference to the light beam. This method indexes large workplaces quickly, with accuracy measured in fractional seconds.

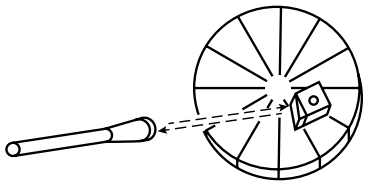

Inspecting a Simple Angle

The photo above shows a workpiece on which an angle of 30º is required. The workpiece is resting on a parallel* which is wrung to angle blocks forming 30º. The entire set-up is lined up vertically with an angle plate and then indicated across the top of the work to determine the correctness of the angle.

* Parallels are not necessary, but they are convenient because of their longer reference surface.

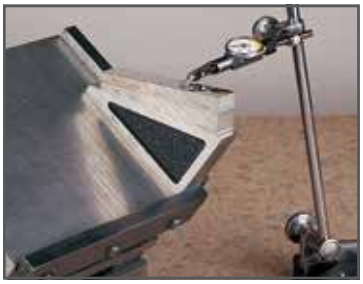

Setting a Revolving Magnetic Chuck

A chuck is set for a 38º angle. Three blocks, +30º, +5º and +3º, are assembled and mounted with the parallel*. The indicator quickly tells if the setting is accurate. Adjustment is a matter of seconds. A revolving chuck teams up perfectly with angle blocks to make possible several applications in tool grinding that are more difficult with other methods.

Angle Gage Block Specifications	Accuracy In Microinches (Microns)	
Material	**Reference Grade croblox®**	**Calibration Grade Steel**
Tolerances: Deviation From Nominal	±1.0 second	±2.0 second
Flatness of Gaging Surfaces	6µin. (0.15µm)	8µin. (0.20µm)
Flatness and Parallelism of Sides	8µin. (0.20µm)	8µin. (0.20µm)
Squareness of Sides to Gaging Surfaces	6 seconds	8 seconds
Area of Gaging Surfaces†	1 x 2" (25 x 50mm)	1 x 2" (25 x 50mm)
Surface Finish (Gage Surfaces Only)	0.4µin. AA (.01µm AA)	0.6µin. AA (.015µm AA)
Estimated Uncertainty of Measurement (k=2)	0.6 seconds	1.0 seconds

Flatness tolerances exclude 1.5mm from the edges on all angle blocks, except where marked with **. Then 3mm from the edge is excluded.
† Dimension of gaging surfaces in millimeters is approximate.

Webber Gage Blocks

True Squares

True squares are designed for fast, precision indexing with angle gage blocks.

All faces of Webber True Squares are at precisely 90º to adjacent sides, with perfect optical flatness and parallelism to permit use with autocollimators.

Applications for fast precision indexing and setting of angular grinding fixtures are almost unlimited. For example: the work and the true square are mounted together on a revolving fixture. A notch is ground by two successive cuts, one at 90º with the true square, and the other at 2º with the addition of two angle blocks (+3º and –1º) mounted on square. An indicator reading is taken before each grind. This process is then repeated by turning the True Square to successive zero readings.

True Squares are designed for use as an accessory to our angle gage blocks to easily make angles greater than 45° and through 180°.

Webber True Squares also permit a fast, easy check of indexing tables. The gaging faces are at precise 90° angles with optical flatness and finishes that permit the use of autocollimators.

The catalog numbers and specifications of our True Squares have been changed in response to updated requirements concerning the application of the uncertainty of measurement.

True Square Specifications

Cat. No.	TS 21.R	TS 21.C	TS 44.W	TS 66.W
Grade	Reference	Calibration	Working	Working
Material	croblox®	Steel	Steel	Steel
Tolerances: Deviation From Nominal	±1.0 second	±2.0 second	±5.0 second	±5.0 second
Flatness of Gaging Surfaces	6µin. (0.15µm)	8µin. (0.20µm)	14µin. (0.35µm)*	14µin. (0.35µm)*
Flatness & Parallelism of Sides	8µin. (0.20µm)	8µin. (0.20µm)	16µin. (0.40µm)*	16µin. 0.40µm)*
Squareness of Sides to Gaging Surfaces	6 seconds	8 seconds	12 seconds	12 seconds
Area of Gaging Surfaces†	1" x 2" (25 x 50mm)	1" x 2" (25 x 50mm)	5/8" x 4" (16 x 100mm)	5/8" x 6" (16 x 150mm)
Surface Finish (Gage Surfaces Only)	0.4µin. AA (0.01µm AA)	0.6µin. AA (.015µm AA)	1.0µin. AA (.025µm AA)	1.0µin. AA (.025µm AA)
Estimated Uncertainty of Measurement (K=2)	0.6 seconds	1.0 seconds	3.5 seconds	4.0 seconds

Flatness tolerances exclude 1.5mm from the edges on all angle blocks except where marked with *. Then, 3mm from the edge is excluded.
† Dimension of gaging surfaces in millimeters is approximate.

True Square

CROBLOX®

CROBLOX Reflecting Cubes

Stable and maintenance free, reflecting cubes are ideal for 90º indexing or alignment in optical tooling or inspection.

croblox® Reflecting Cube

To order, specify the following information:

1. The number and position of all finished sides, including the base:
   NOTE: for fixturing purposes during manufacturing, the bottom face must be one of the finished sides. The bottom face is etched with the Webber logo, a serial number, and face identifications as applicable.
2. Specify the manufacturing tolerances of the 90° angles, 1 second, 3 seconds, or other angular specification.
3. A certificate of calibration showing the deviation from 90° of the finished sides is available at extra cost.
   NOTE: Our uncertainty of measurement is estimated to be ±1.0 seconds. This uncertainty should be added to the manufacturing tolerance to give practical tolerance of the cube.
4. If requested, a copy of the material certificate from our supplier of chrome-carbide is available at no extra cost.

To Order Webber Optical Cubes

Specify all 6 parts to the part number

Prefix	Size	Face Code	Hole Pattern	Hole Type	Accuracy
CUBE	.50 .75 1.0 1.5 2.0	A thru K (See Face Table)	(blank) or 1 thru 4 (See Hole Pattern Chart)	(blank) or S=Fine Thrd T=Coarse Thrd U=Thru Hole V=Thru Hole with C-Sink Y=C'Bore thru hole (See Hole Pattern Chart for available dimensions)	1 SEC* 3 SEC* 5 SEC 10 SEC

*Not Available In 0.50" Size

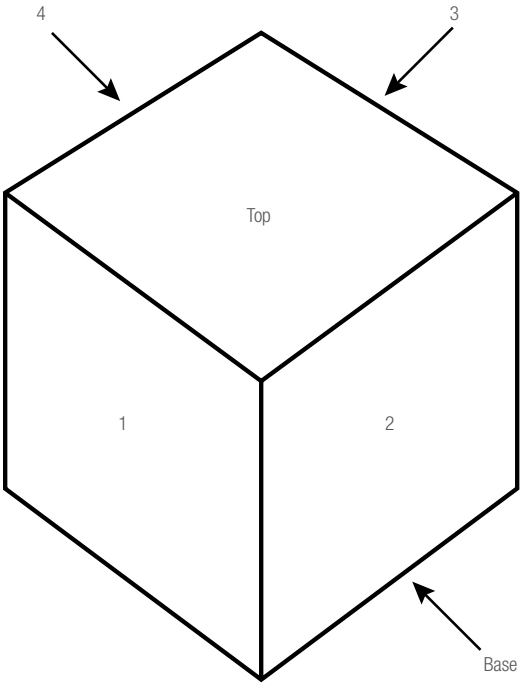

Cubes are made to order from semifinished blanks in six standard sizes: 0.50" (12.7mm), 0.75" (19.0mm), 0.95" (24.1mm), 1.00" (25.4mm), 1.50" (38.1mm), and 2.00" (50.8mm). Also available is a .950" (24.1m) square with a 17/64" (6.7mm) countersunk center hole.

Example: CUBE 1.0 A 3SEC

CUBE 1.0 = 1" Cube

A = finished 6 sides

1SEC = orthogonal to 3 second accuracy.

(No holes were specified in this example.)

Reflectivity of finished faces is nominally:

Visible Blue Light (λ= 4200 Â) ≈ 50%

Visible Red Light (λ= 6900 Â) ≈ 60%

Infrared (λ= 10.6 µm) > 80%

We are unable to measure or certify reflectivity. If reflectivity testing is required,the user must arrange for testing through a third party.

Face Code Table

Face Code	No. of Finished Faces	Finished Faces
A	6	ALL
B	5	1-2-3-4-Base
C	5	1-2-3-Top-Base
D	4	1-2-3-Base
E	4	1-3-Top-Base
F	4	1-2-Top-Base
G	3	1-3-Base
H	3	1-2-Base
J	3	1-Top-Base
K	2	1-Base

Hole Pattern Dimensions and Hole Types

Dimensions are shown in Inches.

	Hole Pattern-1	Hole Pattern-2	Hole Pattern-3	Hole Pattern-4
CUBE .50	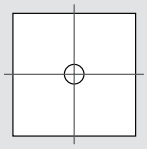 Min. Good Thread .28 T1 S1 T2 S2 U0 U1 U2 U3 V0 V1 C'Bore Depth = .20" Y0 Y1 Y2			
CUBE .75	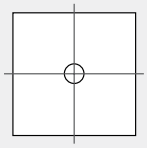 Min. Good Thread .40 T1 S1 T2 S2 U1 U2 U3 U4 V1 V2 V3 V4 C'Bore Depth = .38" Y1 Y2 Y3	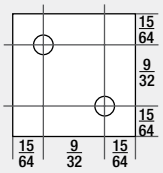 Min. Good Thread .40 T1 S1 T2 S2 U1 U2 U3 C'Bore Depth = .38" Y1		
CUBE .95	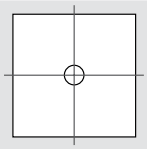 .266 Dia. Thru Hole 72° C-Sink. Min. 100" Deep for #8 Flat Head Screw			
CUBE 1.0	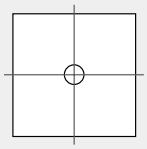 Min. Good Thread .50 T2 S2 T3 S3 T4 S4 U2 U3 U4 V2 V3 V4 C'Bore Depth = .50" Y2 Y3 Y4	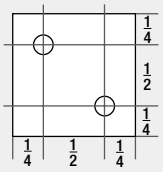 Min. Good Thread .50 T2 S2 T3 S3 U2 U3 U4 C'Bore Depth = .50" Y2	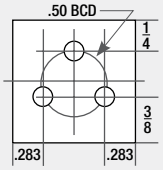 Min. Good Thread .50 T2 S2 T3 S3 U2 U3 U4 C'Bore Depth = .50" Y2	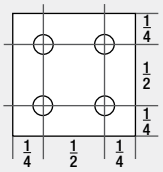 Min. Good Thread .50 T2 S2 T3 S3 U2 U3 U4 C'Bore Depth = .50" Y2
CUBE 1.5	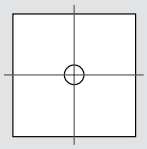 Min. Good Thread .62 T3 S3 T4 S4 U3 U4 U5 V3 V4 V5 C'Bore Depth = .75" Y3 Y4 Y5	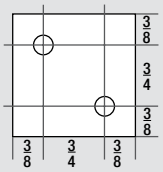 Min. Good Thread .62 T3 S3 T4 S4 U3 U4 U5 V3 V4 C'Bore Depth = .75" Y3 Y4	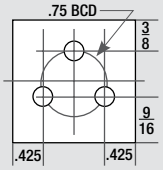 Min. Good Thread .62 T3 S3 T4 S4 U3 U4 U5 V3 V4 C'Bore Depth = .75" Y3 Y4	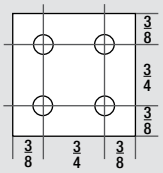 Min. Good Thread .62 T3 S3 T4 S4 U3 U4 U5 V3 V4 C'Bore Depth = .75" Y3 Y4
CUBE 2.0	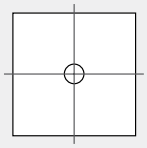 Min. Good Thread .75 T3 S3 T4 S4 U4 U5 U6 V3 V4 V5 C'Bore Depth = 1.25" Y4 Y5	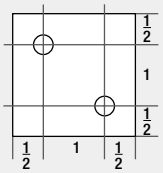 Min. Good Thread .75 T3 S3 T4 S4 U4 U5 U6 V3 V4 V5 C'Bore Depth = 1.25" Y4 Y5	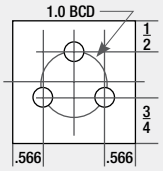 Min. Good Thread .75 T3 S3 T4 S4 U4 U5 U6 V3 V4 V5 C'Bore Depth = 1.25" Y4 Y5	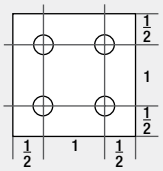 Min. Good Thread .75 T3 S3 T4 S4 U4 U5 U6 V3 V4 V5 C'Bore Depth = 1.25" Y4 Y5

Legend for Hole Types

Threaded Hole		Thru Hole	72° Countersunk Hole	Counterbore Hole for Cap Head Screw	
T1 = 6-32	S1 = 6-40	U0 = 0.128 Dia. for #4 Screw	V0 = 0.128 Dia. for #4 Screw	Y0 = for #4 Screw 0.128 Dia. Thru Hole	0.21 Dia. C'Bore
T2 = 8-32	S2 = 8-36	U1 = 0.156 Dia. for #6 Screw	V1 = 0.156 Dia. for #6 Screw	Y1 = for #6 Screw 0.180 Dia. Thru Hole	0.29 Dia. C'Bore
T3 = 10-24	S3 = 10-32	U2 = 0.180 Dia. for #8 Screw	V2 = 0.180 Dia. for #8 Screw	Y2 = for #8 Screw 0.180 Dia. Thru Hole	0.29 Dia. C'Bore
T4 = 1/4-20	S4 = 1/4-28	U3 = 0.206 Dia. for #10 Screw	V3 = 0.206 Dia. for #10 Screw	Y3 = for #10 Screw 0.206 Dia. Thru Hole	0.34 Dia. C'Bore
		U4 = 0.266 Dia. for 1/4" Screw	V4 = 0.266 Dia. for 1/4" Screw	Y4 = for 1/4" Screw 0.266 Dia. Thru Hole	0.40 Dia. C'Bore
		U5 = 0.328 Dia. for 5/16" Screw	V5 = 0.328 Dia. for 5/16" Screw	Y5 = for 5/16" Screw 0.332 Dia. Thru Hole	0.50 Dia. C'Bore
		U6 = 0.391 Dia. for 3/8" Screw			

Tolerances are ± .010" except for Counterbore depth: ± .020"

Example: CUBE 1.5 D 2 Y4 1SEC

CUBE 1.5 = 1-1/2" Cube

D = finished front, right, and base

2 = two holes located in corners of the cube (See Pattern Table for hole location)

Y4 = .266 Dia. thru hole with .40 Dia C'Bore for 1/4' cap screw

For 1.5" cube, C'Bore depth = .75" (See Pattern Table)

1SEC = finished sides orthogonal to 1 second accuracy

Optical

Optical Polygons

Webber Optical Polygons provide an easy, accurate method of checking and calibrating angles. They are designed for use with autocollimators in measuring angle spacing.

The exclusive one-piece design provides compact, fixed master for precise angle spacing. Target faces are highly reflective and optically flat.

Chrome carbide polygons provide a hardness of Rockwell 71-73 C and a corrosion resistance 10-20 times that of 18-8 stainless steel, resulting in lifetime accuracy.

Maintenance problems are virtually eliminated due to their ruggedness and extreme stability.

A 1" mounting hole, flanged bushing, lapped washer and hold-down bolt, furnished with each unit, permit mounting the polygon in any desired attitude. Available in two accuracy grades. Furnished in case. Certificate of Calibration included.

Optical Polygon

Optical Polygon Specifications

No. of Sides	Angle Spacing Degrees	Diameter Across Corners in (mm)	Height in (mm)	Target Size in (mm)	Area Sq. In.	Area Sq. Cm.
3	120	2.90" (73.6mm)	.880" (22.3mm)	.75" x .75" (19 x 19mm)	.56	3.60
4	90					
5	72					
6	60					
8	45					
9	40					
10	36					
12	30					

To order polygons, specify number in the following key/sequence:

Optical Polygon OP
No./Faces
Decimal
Accuracy Grade

Example: OP 3.0 = A 3-sided optical polygon with a 0 Reference Accuracy

Optical Polygon Specifications

Accuracy Grade	Target Area Flatness*	Accuracy of Calibration (Uncertainty)	Maximum Deviation of Faces from Nominal 3-12
Reference: 0	4 µin. (.10 µm)	±1.0 sec.	±1.0 sec.
Calibration: 1			±2.0 sec.

* Excludes .020" (0.5mm) from edges.
All sizes: Flatness and parallelism – top and bottom – .00005"; maximum pyramidal error ±15 seconds.

Fused Quartz Optical Flats

Fused Quartz Opticla Flat

For visually checking the flatness of seals, gages and mating surfaces. Through means of interpreting light interference patterns or bands, the optical flat provides a simple, accurate precision method for measuring surface flatness. Flats are crafted from high quality fused quartz and provide the maximum resistance to wear, damage and temperature variations.

Starrett-Webber optical flats are available in single or double surfaces and three accuracy grades. The double flat has both surfaces finished to tolerance but not necessarily parallel. Double flats provide longer service because wear is distributed over two surfaces. All are furnished with case.

Coating is available and it aids readability when applied to one surface. Coating is of value on single-sided flats only. Coating on a double surface will reduce the readability of the other surface.

When ordering, specify size, accuracy grade, single or double side, and coated or not.

Fused Quartz Optical Flats, Accuracy Grades

Reference Grade	1 µin. (.03 µm)
Master Grade	2 µin. (.05 µm)
Working Grade	4 µin. (.10 µm)

Fused Quartz Optical Flats, Standard Sizes*

1 x 1/2" (25 x 12.7mm)	3 x 11/16" (75 x 17.5mm)	5 x 7/8" (125 x 22mm)
2 x 5/8" (50 x 16mm)	4 x 3/4" (100 x 19mm)	6 x 1" (150 x 25mm)

* Dimensions shown in millimeters are approximate.
Larger sizes available on special order.
Optical flats are made to U.S. Federal Specifications GG-O-635. Certificate of Calibration available at extra cost.
Accuracy of Calibration (uncertainty) 3µin. (0.08µm).

CH 1.

Chamois

These Starrett-Webber synthetic chamois cloths, rather than natural chamois, are recommended for wiping gage surfaces. They can be used with solvents and oils, including Starrett M-1® All-Purpose Lubricant, and are washable in detergents.

Chamois	
Cat. No.	**Description**
CH 1.	Dry
CH 2.	Lubricated

Gage Block Stones

If a block does not wring together with other blocks, it may be the result of nicks or other damage. Examine blocks carefully with a magnifying glass. If a small burr is found, it may be removed with a gage block stone.

Starrett-Webber stones, when used moderately, may be rubbed directly on the gaging surfaces without danger of decreasing the size of the gage block. Available in 3 styles/materials as listed.

GS 13 is recommended for use with steel gage blocks

SAO 13 is recommended for general use. Steel, ceramic, or carbide blocks

SAO 23 is recommended for use with carbide and ceramic gage blocks

Gage Block Stones

Gage Block Stones		
Cat. No.	**For Block Material**	**Description**
GS 13.	Steel	Black Granite Stone, 1/4 x 1 x 3" (6.3 x 25 x 75mm)
SAO 13.	Steel or Carbide	Sintered Aluminum Oxide, 5/16 x 1 x 3" (8 x 25 x 75mm)
SAO 23.		Serrated Aluminum Oxide with Case, 1 x 2 x 3" (25 x 50 x 75mm)

NVLAP LAB CODE 200038-0

Accredited Gage Block Calibration Service

In accordance with: ISO 17025
ANSI/NCSL Z540-1
ISO 10012-1
former MIL-STD-45662A

Master Calibration

The calibration procedure is regarded as a process to be controlled and monitored using SPC techniques. Information that would enable the analysis of control data is to be recorded and can be made available to the user upon request (at extra cost). A second master, sometimes referred to as a control block, is used in the calibration. The purpose of the second master is to generate known difference reading which can be analyzed. The average of the known differences of several readings of the two masters and the range of their differences can be analyzed using statistical techniques. The calibration process can be demonstrably controlled.

Reported measurement uncertainties based upon a 95% confidence level (two standard deviations) are dynamic, reflecting the current performance of the specific equipment and operator. Other factors included in the stated uncertainty are derived from a detailed error analysis. The error analysis is based upon experimentation whenever possible or industry consensus from estimates derived from NIST publications. Experimental checks of the stated uncertainty levels are made using laboratory comparison techniques involving both internal repeatability studies and external comparisons with other calibration laboratories.

Our Reference Gage Blocks are calibrated directly by NIST. All other reference standards are periodically checked and calibrated either by NIST or NVLAP accredited laboratories. Documented histories are maintained. Statistical methods are used to control all of our master gages.

NOTICE: Webber Gage cannot recommend recalibration due dates on our calibration certificates or calibration stickers. Recalibration due dates must be provided to us at the time of order. If this information is not provided, the recalibration due date will be left blank for the user to add.

Laboratory Calibration

Each block calibrated using our Laboratory Calibration procedure is calibrated three times using our Master Calibration procedure as described above - Using different transfer master blocks, operators and equipment when possible for all three measurements. The results are averaged together and reported. This results in the lowest possible uncertainty reported to the user as random errors in the measuring process are averaged out.

This calibration service is restricted to Webber rectangular croblox® gage blocks of Webber grades LM or AA, GGG grades 0.5 and 1, and B89 grades 00 and K.

Commercial Calibration

Calibrations are performed using the same program as our Master calibrations except that the second master, the control block, is omitted. By omitting this control block some of the statistical tests are also omitted which results in larger uncertainty.

All necessary information to confirm the calibration is recorded. All raw data from the comparator, the temperature of the blocks, the temperature of the comparator, and the relative humidity of the surrounding environment is recorded for each measurement. Applied correction factors are broken down and are recorded, as well as the results of any calibrations.

Our Reference Gage Blocks are calibrated directly by the National Institute of Standards and Technology. All other reference standards are calibrated either by NIST or NVLAP accredited laboratories. Documented histories are maintained of our measuring and test equipment. Statistical methods are used to control our Master Gage Blocks.

Reported uncertainties are based on a 95% confidence level. Experimental checks of the uncertainty are made using laboratory comparison techniques involving repeatability studies and external comparisons with other calibration laboratories.

Approximate Best Uncertainty (k=2) for blocks through 4" (100mm) in length

	Commercial Calibration		Master Calibration		Laboratory Calibration	
Grade	Uncertainty	Minimum	Uncertainty	Minimum	Uncertainty	Minimum
Webber LM GGG 0.5					0.65 + 0.7L .016 + .0007L	1.4µin .035µm
Webber AA B89 Grade 00, K GGG 1	1.6 + 1.0L .04 + .001L	2.4 µin .060µm	1.2 + 0.7L .03 + .0007L	1.7µin .045µm	0.65 + 0.7L .016 + .0007L	1.4µin .035µm
Webber A1 B89 Grade 0 GGG 2	2.0 + 1.0L .05 + .001L	3.0 µin .075µm	1.8 + 0.7L .045 + .0007L	2.0µin .050µm		
B89 Grade AS1 GGG 3	2.0 + 1.0L .05 + .001L	3.0 µin .075µm	1.8 + 0.7L .05 + .0007L	2.0µin .050µm		

NVLAP® accreditation does not constitute an endorsement of any product by NVLAP® or any agency of the U.S. Government.

Starrett-Webber Gage Calibration

Gage Block Calibration Services

We offer expert and comprehensive gage block calibration and repair services for Starrett-Webber gage blocks.

Calibration will help you prevent production inaccuracies. It will identify a worn gage block before it can create a problem. Regular, periodic calibration of your gage blocks will ensure that your gage blocks are as accurate and dependable as when they were new.

Comprehensive and Fast

Starrett-Webber gage block calibration is performed promptly – your gage blocks will be ready to be returned to you within a few days after we receive them.

The calibration process is as follows:

1. After receiving your gage blocks, we document their arrival, then clean each block to remove oil, grease and film. The case is also thoroughly cleaned.
2. Next, we lightly stone each block to remove small nicks and burrs. This does not guarantee that the blocks will wring if they are heavily nicked, scratched, or burred.
3. Your gage blocks are then individually compared with master blocks that are accurate to fractions of one millionth of an International Inch. Starrett-Webber Grand Master Blocks are Starrett-Webber croblox® (solid chrome carbide). Our exclusive Grand Master Gage Blocks are calibrated directly by the U.S. National Institute of Standards and Technology (NIST).
4. Our automated system generates a Certificate of Calibration to ensure complete accuracy in recording gage block size. This certificate shows the deviation from the marked size of each block and marks those sizes which need replacing.
5. We will then provide a quotation for recommended replacements in the original material and croblox, if applicable.
6. If replacements are not required, or if you have instructed us only to calibrate and return the set, the gage blocks are packed and returned to you with a Certificate of Calibration showing the "as found" readings.
7. If you authorize replacements, your Certificate of Calibration is marked to indicate which blocks were replaced and the date of replacement. At your request, we can issue an "as found" and an "as left" certificate for an additional fee.

Please provide the following information:

When sending gage blocks to us for calibration, please specify whether you want us to:

A. Calibrate, issue a certificate and return only;

B. Calibrate, advise condition and hold for instructions; or

C. Calibrate, replace worn and missing blocks, then return.

If your order specifies replacement for worn and missing blocks and the cost of replacement approaches that of a new set, we will inform you, provide a quote price and wait for your instructions.

Be sure to protect your valuable gage blocks by packaging them carefully

Gage block cases are made for immobile storage – not as shipping crates.

It is good practice to carefully follow these steps when preparing your gage blocks for shipment:

- Treat them with rust preventative. Starrett M1® Lubricant is an excellent choice for this job.
- Place wax paper over the blocks.
- If necessary, add cushioning inside lid to prevent excessive movement of blocks in the inserts. Do not overdo this – the lid should not have to be forced to close.
- Seal the closed case with reinforced heavy tape. Note that the case clasp alone is not adequate to ensure that the case remains closed during shipment.
- Use a strong, oversize outer shipping container. Carefully surround the case with a generous amount of firm cushioning material to ensure that your blocks withstand shock in transit.
- Be sure to mark the shipping box as "Fragile."

As Good as New

When you receive your freshly calibrated gage block set with all necessary of the recommended repairs and/or replacements, you can rely on them to be essentially as good as new – that is, the most reliable and trusted gage blocks available – Starrett-Webber.

PRECISION MAKES THE DIFFERENCE

bi-metal unique®

YOUR NAME DEPENDS ON OURS

Starrett Unified Shank jig saws incorporate the Starrett exclusive bi-metal unique® process technology. Blades made from this process resist breakage, cut faster and last longer than conventional saws.

Starrett®

(978) 249-3551 • starrett.com

Follow us!

PRECISION GRANITE PRODUCTS

Granite Surface Plates and Accessories

In 2006, The L.S. Starrett Company acquired Tru-Stone Technologies in Waite Park, MN. With this acquisition, a broad variety of new capabilities are now available to Starrett customers.

OEM Capabilities

Our Starrett Tru-Stone Granite Division continues to provide solutions to customers in precision granite, carbon fiber, ceramic, high precision vacuum chucks and other materials. We offer granite machine bases and surface plates to meet your requirements up to 55 feet long and weighing 72 tons.

Whether your application requires a simple standard surface plate or a large OEM assembly, the Starrett Tru-Stone Division will work with you to fulfill those requirements.

Every linear measurement depends on an accurate reference surface from which final dimensions are taken. Starrett Precision Granite Surface Plates provide this reference plane for work inspection and for work layout. Their high degree of flatness, overall quality and workmanship also make them ideal bases for mounting sophisticated mechanical, electronic and optical gaging systems.

Material

The granite for Starrett surface plates has been selected for the best balance of physical properties, maximum resistance to wear and for deflection under load. Each plate has been lapped to a fine microinch finish to minimize tool wear and drag.

The most important element in the performance and life of granite surface plates is the percentage of quartz that is present in the stone. Quartz is more than twice as resistant to wear as the other minerals in granite. It provides bearing points that are of a hard, highly polished, smooth character which protect the accuracy and finish of both the surface plate and the tools and instruments used on it.

Starrett Crystal Pink® Granite has the highest percentage of quartz of any granite. Higher quartz content means greater wear resistance. The longer a surface plate holds its accuracy, the less often it will require resurfacing, ultimately providing better value.

Selection

Accuracy Under Load

Starrett Crystal Pink® and Superior Black Granite plates have a thickness capable of supporting a total normal load equal to 50lb for each square foot (24kg for each 1,000 sq. cm) of surface area loaded in the center of the plate – without deflecting the plate along a diagonal of more than one-half the flatness tolerance. This is the accepted rating in the U.S. Federal Specification GGG-P-463c and ASME B89.3.7 2013.

In the situations where abnormal loading conditions are anticipated, Starrett can engineer and modify surface plate thickness to meet virtually any requirement.

Ledges and Clamping

Surface plates without work clamping ledges are recommended for sustained accuracy and reliability. Ledges are for work clamping purposes only. If excessive torque is used when applying clamps to ledges, it can adversely affect measurements taken near the plate edges. If clamping is important, T-slots and threaded metal inserts may be installed in the surface.

Accuracy

Specifications

Starrett Granite Surface Plates meet or exceed U.S. Federal Specification GGG-P-463c and ASME B89.3.7 2013.

Starrett Granite Surface Plate Calibration Services

- Calibration of granite surface plates, granite parallels (2 and 4-sided), granite straight edges, granite tri-squares, granite angle plates and granite squares
- Surface plate and granite metrology and accessory resurfacing
- Calibration Lab is accredited by A2LA to ISO/IEC 17025*

* The L.S. Starrett Company's accreditations are site-specific and tool-specific. The scope of accreditation is available upon request to each location.

Technical Information

Accuracy

Granite Surface Plates are manufactured in three grades of accuracy:

- **Grade AA – Laboratory Grade**
  This is typically specified for precision operations in constant temperature gaging rooms and metrology departments.
- **Grade A – Inspection Grade**
  This is typically specified for general work in quality control.
- **Grade B – Toolroom Grade**
  This is typically specified for production checking work throughout the shop.

Unilateral Flatness Tolerance

Overall flatness tolerance is based on unilateral measurement. All points on the work surface shall be contained between two parallel planes separated at a distance no greater than the amount specified for each particular grade and size as shown in our listings.

Repeat Reading Tolerance

Repeat reading tolerance is easily checked with a Repeat Reading Gage. This gage detects local areas, not overall flatness.

In addition to the overall flatness tolerance referred to above, Starrett provides repeat reading tolerances as follows:

Diagonal Inches (mm)	Full Indicator Movement (F.I.M.) in Microinches and (Microns) Grade AA	Grade A	Grade B	Obtained
Through 30" (750)	35 (.9)	60 (1.5)	110 (2.8)	When Not Specified
Over 30-60" (750-1500)	45 (1.1)	70 (1.8)	120 (3)	
Over 60-90" (1500-2250)	60 (1.5)	80 (2)	160 (4)	
Over 90-120" (2250-3000)	75 (1.9)	100 (2.5)	200 (5)	
Over 120-150" (3000-3800)	90 (2.3)	120 (3)	240 (6)	
Over 150" (3800)	100 (2.5)	140 (3.6)	280 (7)	
All Sizes	25 (.6)	50 (1.3)	100 (2.5)	When Specified

A repeat reading gage detects minute variations of the surface within the unilateral flatness tolerance of the whole surface.

Certified Accuracy

Before shipment, each surface plate must pass a critical final inspection to prove that its entire surface is within the specified tolerance. The final inspection is done with an autocollimator in a controlled environment. This instrument is checked and certified against standards traceable to the U.S. National Institute of Standards and Technology (NIST). The instrument's certification is on file at the Starrett Tru-Stone Technologies Division in Waite Park, MN.

All shipments of Starrett precision granite products include a calibration certificate which verifies traceability to NIST as well as certifying that the inspection requirements of U.S. MIL-I-45208A and Federal Spec. GGG-P-463c and ASME B89.3.7 2013 have been met.

Periodic Inspection

Every surface plate in use should be frequently inspected, especially when used in shop conditions where abrasion is common. An effective inspection program should include regular checks with an autocollimator. If tolerance variations are excessive, the plate can be transferred to work involving less accuracy or it can be resurfaced to restore its original level of accuracy.

Resurfacing Services

Resurfacing for Starrett and other brands of granite surface plates are available in our plant or yours.

Design Assistance

Starrett engineers will provide prompt assistance with any problem related to surface plate design, installation or use. Our staff is available to assist in your design of larger OEM projects.

To get the best service and value from any granite plate, contact Starrett Tru-Stone.

Inspecting a granite plate with an autocollimator

Granite Solutions

Custom Engineered Granite Solutions

For Oversize Parts and Assembling

Starrett has unparalleled experience and expertise in building special, extra-large granite surface plates and custom products from granite to meet specific requirements.

All Starrett special surface plates are made from single, solid slabs of granite quarried in one piece, machined in one piece and finished to your specified dimensions and tolerances.

Special Plates are Usually Requested in Two Categories:

Inspecting oversize parts:

The first category is for inspecting oversize parts and assemblies such as diesel engine blocks and crankshafts, vehicle frames, missile components and ground support equipment.

Inquiries for granite surface plates to accommodate oversize parts and assemblies should indicate:

1. Type of part to be staged
2. Distribution of weight
3. Inspection accuracy required
4. Work holding requirements
5. Footing requirements, ceiling height and availability of heavy-duty work-handling equipment

Modifying standard plates:

The second general category relates to modifying standard plates or building special surface plates for work-holding attachments of many different types.

Threaded and solid inserts, adapter holes, T-slots, dovetails – almost anything added to conventional gaging fixtures can also be added to Starrett surface plates, extending their accuracy and versatility for numerous applications. Precision edges, made square with the top surface and adjacent edges, as well as precision graduated rules can also be added.

We can build and assemble this work-holding or special gaging equipment to very close tolerance in either fractional, decimal inch or metric dimensions. All special plates are quoted on an individual basis, based on complexity and tolerance requirements. We will work with you to give you the best, most economical solution for your application.

The uses of Starrett special granite surface plates are limited only by the imagination of the creative tool designer. Inquiries for special surface plates like the type shown will be studied and recommendations given without obligation.

We can build custom fixture plates that provide exceptional positional accuracy for one or several of your applications

Tru-Vac Vacuum and Air-Lift Technology

Starrett provides both standard and custom solutions for vacuum chucking, positioning or air-lift part transfer. Our innovative Tru-Vac technology integrates the stability and precision flatness of granite with a porous medium, usually ceramic.

Tru-Vac can eliminate the need for mechanical clamping with its inherent part distortion or damage risk by utilizing vacuum draw at specific locations or distributed over the entire surface of your part.

Conversely, Tru-Vac technology can be utilized to provide positive pressure to allow delicate parts to glide on a cushion of air from which they can be safely lifted or transferred to the next operation.

Starrett engineers will work with you to select the best porous medium for your application based on surface area, flatness, wear, and desired airflow characteristics.

Tru-Vac technology can be utilized in air chucks smaller than a hockey puck or larger than a conference room table. Vacuum zones can be of nearly any shape by virtue of our CNC milling capabilities.

Multiple zones can be utilized to accommodate a variety of part sizes or even to provide a combination of negative and positive pressure for controlled part movement.

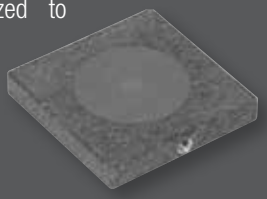

Tru-Vac Vacuum Chuck

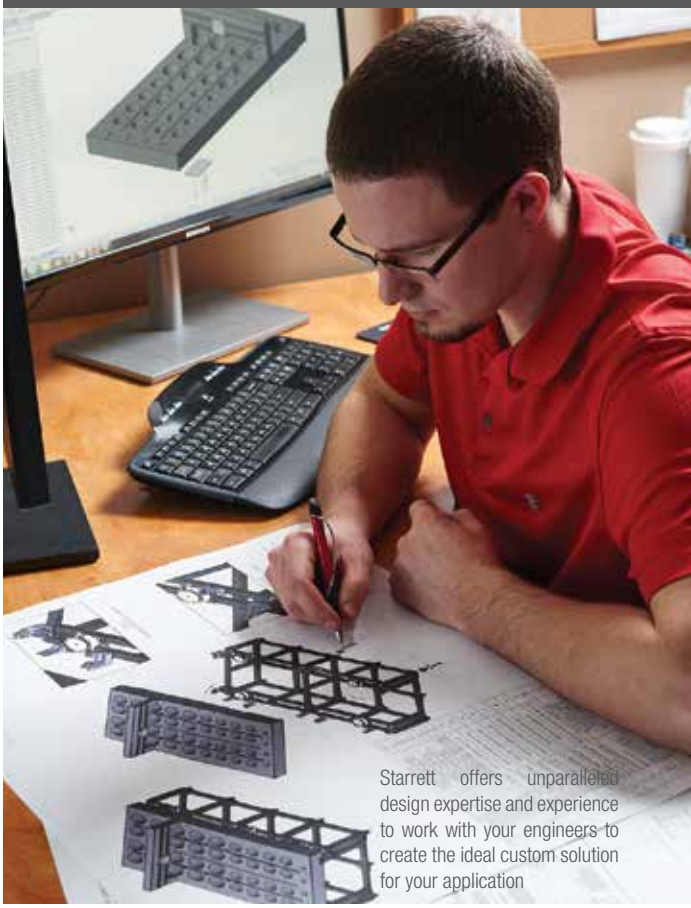

Starrett offers unparalleled design expertise and experience to work with your engineers to create the ideal custom solution for your application

Technical Capabilities

Starrett has a variety of technical capabilities that, combined with our expertise, makes us the perfect choice for your custom granite requirements.

These capabilities include:

- Drilled and bored holes with precise size and location (right)
- Inserts turned and inspected in-house for quality control and custom options
- T-slots and inserts bonded using proprietary methods
- CNC milling of patterns of clearance areas
- Specialty slot milling capabilities
- Unsurpassed dimensional control of flat, square, and parallel surfaces

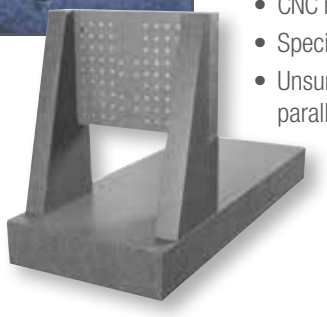

Examples of Custom Applications Capabilities

Above: High-accuracy, CNC-drilled holes and milled contours

Right: Clean room assembly

Left: Extremely large (or small) part capabilities.

Assembly Integration

In addition to collaborating on the design and building of your machine foundation, Starrett technicians are skilled at value-added assembly.

Using precision equipment in our assembly laboratories, we can provide you with the next level assembly, such as adding bearing rails, encoder rails, screw drives, stages, or vibration damping devices.

Having this assembly done at our factory provides accountability for accurate performance.

Granite Surface Plates

Crystal Pink Granite Surface Plate

Crystal Pink®

- Accurate for use in metrology laboratories and wear resistant for use in abrasive shop environments
- The finest, most durable granite surface plate available to industry today
- The name is derived from the fact that it has the highest crystalline quartz content of any granite surface plate

Surface Finish

- Even distribution of large quartz crystals provides a smooth finish, which significantly reduces wear on the surface plate and the instruments used on it
- Fine micro-finish, combined with the natural voids in the surface provides a velvety-smooth tool action

Wear Life

- Non-quartz-bearing granite in average daily use requires resurfacing about once a year, while Crystal Pink plates used in these same plants have required resurfacing only once every three to five years, on average.

Starrett Crystal Pink:

- Meets or exceeds U.S. Federal Specification GGG-P-463c and ASME B89.3.7 2013 for overall flatness, local area flatness and accuracy under load
- Great surface hardness and wear resistance – the highest percentage of quartz crystals of any granite plate
- Smooth, jewel-like quartz bearing points protect accuracy and finish of both the surface and the tools used on it
- Quality and economy combined
- Comparable to black granite plates while outwearing them as much as 5 to 1
- Meets or exceeds 50 lb per square foot (24kg per 1,000 sq. cm) load bearing specifications. Available in 100 lb (45kg) test series.
- Standard-size plates are mounted on resilient support pads, providing isolation from normal vibration and a non-distorting 3-point suspension.
- Packed one per crate with skids for forklift handling.

Grade AA Laboratory						No Ledge			Two Ledge		
Surface Size		Thickness		Flatness Unilateral Tolerance		Weight			Weight		
in	mm	in	mm	in	mm	lb	kg	EDP	lb	kg	EDP
12 x 12	300 x 300					55	25	80601	50	23	80602
12 x 18	300 x 450	4	100	.000050	0.0012	85	39	80610	78	35	80611
18 x 18	450 x 450					125	57	80619	120	54	80620
18 x 24	450 x 600	6	150	.000075	0.0019	248	113	80628	224	102	80629
24 x 24	600 x 600					330	150	80646	306	139	80647
24 x 36	600 x 900	6	150	.000100	0.0025	495	225	80655	460	209	80656
30 x 48	750 x 1200	10	250	.000168	0.0043	1585	719	80883	1585	719	80884
36 x 36	900 x 900	6	150	.000150	0.0038	745	338	80701	710	322	80702
36 x 48	900 x 1200	8	200	.000200	0.0050	1320	599	80710	1250	567	80711
36 x 60	900 x 1500	10	250	.000250	0.0063	2065	937	80719	1950	885	80720
36 x 72	900 x 1800	12	300	.000300	0.0076	2970	1347	80728	2810	1275	80729
48 x 48	1200 x 1200	10	250	.000200	0.0051	2535	1150	80889	2535	1150	80890
48 x 72	1200 x 1800	12	300	.000350	0.0088	3960	1796	80755	3795	1721	80756
48 x 96	1200 x 2400	16	400	.000500	0.0127	7040	3193	80773	6750	3062	80774
Grade A Inspection						**No Ledge**			**Two Ledge**		
Surface Size		Thickness		Flatness Unilateral Tolerance		Weight			Weight		
in	mm	in	mm	in	mm	lb	kg	EDP	lb	kg	EDP
12 x 12	300 x 300					55	25	80604	50	23	80605
12 x 18	300 x 450	4	100	.000100	0.0025	85	39	80613	78	35	80614
18 x 18	450 x 450					125	57	80622	120	54	80623
18 x 24	450 x 600	6	150	.000150	0.0038	248	113	80631	224	102	80632
24 x 24	600 x 600					330	150	80649	306	139	80650
24 x 36	600 x 900	6	150	.000200	0.0050	495	225	80658	460	209	80659
30 x 48	750 x 1200	8	200	.000400	0.0102	1270	576	80885	1270	576	80886
36 x 36	900 x 900	6	150	.000300	0.0076	745	338	80704	710	322	80705
36 x 48	900 x 1200	8	200	.000400	0.0102	1320	599	80713	1250	567	80714
36 x 60	900 x 1500	10	250	.000500	0.0127	2065	937	80722	1950	885	80723
36 x 72	900 x 1800			.000600	0.0152	2475	1123	80731	2340	1061	80732
48 x 48	1200 x 1200	8	200	.000500	0.0130	2030	921	80891	2030	921	80892
48 x 72	1200 x 1800	10	250	.000700	0.0177	3300	1497	80758	3165	1436	80759
48 x 96	1200 x 2400	12	300	.001000	0.0254	5280	2395	80776	5060	2295	80777
Grade B Toolroom						**No Ledge**			**Two Ledge**		
Surface Size		Thickness		Flatness Unilateral Tolerance		Weight			Weight		
in	mm	in	mm	in	mm	lb	kg	EDP	lb	kg	EDP
12 x 12	300 x 300					55	25	80607	50	23	80608
12 x 18	300 x 450	4	100	.000200	0.0050	83	38	80616	76	34	80617
18 x 18	450 x 450					125	57	80625	118	54	80626
18 x 24	450 x 600	4	100	.000300	0.0076	165	75	80634	155	70	80635
24 x 24	600 x 600					220	100	80652	210	95	80653
24 x 36	600 x 900	6	150	.000400	0.0102	495	225	80661	460	209	80662
30 x 48	750 x 1200			.000700	0.0180	950	431	80887	950	431	80888
36 x 36	900 x 900			.000600	0.0152	745	338	80707	710	322	80708
36 x 48	900 x 1200			.000800	0.0203	990	449	80716	955	433	80717
36 x 60	900 x 1500	8	200	.001000	0.0254	1650	749	80725	1560	708	80726
36 x 72	900 x 1800			.001200	0.0304	1980	898	80734	1870	848	80735
48 x 48	1200 x 1200	6	150	.000900	0.0229	1520	689	80893	1520	689	80894
48 x 72	1200 x 1800	8	200	.001400	0.0355	2640	1198	80761	2530	1148	80762
48 x 96	1200 x 2400	10	250	.002000	0.0508	4400	1996	80779	4215	1912	80780

Other sizes available by request. No ledge and two ledge plates listed, four ledge plates available by request.

How to Order

Specify:

1. Surface size of plate
2. Grade AA, A or B tolerance
3. Number of ledges

Special Requirements

Should your application require something other than a standard surface plate, we can provide you with custom options.

Starrett can produce your plate from pink, black or gray granite. Custom sizes and thicknesses are available upon request to meet your needs.

We can also add holes, counterbores, threaded or solid stainless steel inserts and t-slots to your surface plate.

Contact Starrett Tru-Stone for assistance.

Granite Surface Plates

Superior Black

Our superior black granite has low water absorption, thus minimizing the possibility of your precision gages rusting while setting on the plates.

This black granite creates little glare resulting in less eyestrain for individuals using the plates.

We have chosen our superior black granite with the specific intent of keeping thermal expansion to a minimum.

Superior Black Granite Surface Plate

Special Requirements

Should your application require something other than a standard surface plate, we can provide you with custom options.

Starrett can produce your plate from pink, black or gray granite. Custom sizes and thicknesses are available upon request to meet your needs.

We can also add holes, counterbores, threaded or solid stainless steel inserts, and t-slots to your surface plate.

Contact Starrett Tru-Stone for assistance.

How to Order

Specify:

1. Surface size of plate
2. Grade AA, A or B tolerance
3. Number of ledges

Grade AA Laboratory								No Ledge	Two Ledge
Surface Size		Thickness		Flatness Unilateral Tolerance		Weight			
in	mm	in	mm	in	mm	lb	kg	EDP	EDP
12 x 12	300 x 300	4	100	.000050	0.0012	61	28	85006	85007
12 x 18	300 x 450					92	42	85010	85011
18 x 24	450 x 600			.000075	0.0019	183	83	85028	85029
24 x 24	600 x 600					244	111	85036	85037
24 x 36	600 x 900	6	150	.000100	0.0025	549	249	85055	85056
30 x 48	750 x 1200	8	200	.000168	0.0043	1220	553	85082	85083
36 x 36	900 x 900	6	150	.000150	0.0038	824	374	85090	85091
36 x 48	900 x 1200	8	200	.000200	0.0050	1464	664	85110	85111
36 x 60	900 x 1500	10	250	.000250	0.0063	2288	1038	85118	85119
36 x 72	900 x 1800	12	300	.000300	0.0076	3294	1494	85128	85129
48 x 48	1200 x 1200	8	200	.000200	0.0051	1952	885	85136	85137
48 x 72	1200 x 1800	10	250	.000350	0.0088	3660	1660	85155	85156
48 x 96	1200 x 2400	12	300	.000500	0.0127	5856	2656	85173	85174

Grade A Inspection								No Ledge	Two Ledge
Surface Size		Thickness		Flatness Unilateral Tolerance		Weight			
in	mm	in	mm	in	mm	lb	kg	EDP	EDP
12 x 12	300 x 300	4	100	.000100	0.0025	61	28	85008	85009
12 x 18	300 x 450					92	42	85013	85014
18 x 24	450 x 600			.000150	0.0038	183	83	85031	85032
24 x 24	600 x 600					844	111	85038	85039
24 x 36	600 x 900	6	150	.000200	0.0050	549	249	85058	85059
30 x 48	750 x 1200			.000400	0.0102	915	415	85085	85086
36 x 36	900 x 900			.000300	0.0076	824	374	85092	85091
36 x 48	900 x 1200			.000400	0.0102	1098	498	85113	85114
36 x 60	900 x 1500	8	200	.000500	0.0127	1830	830	85120	85121
36 x 72	900 x 1800	10	250	.000600	0.0152	2745	1245	85131	85132
48 x 48	1200 x 1200	6	150	.000500	0.0130	1464	664	85138	85139
48 x 72	1200 x 1800	8	200	.000700	0.0177	2928	1328	85158	85159
48 x 96	1200 x 2400	10	250	.001000	0.0254	4880	2214	85176	85177

Grade B Toolroom								No Ledge	Two Ledge
Surface Size		Thickness		Flatness Unilateral Tolerance		Weight			
in	mm	in	mm	in	mm	lb	kg	EDP	EDP
12 x 12	300 x 300	3	75	.000200	0.0050	46	21	85012	85015
12 x 18	300 x 450					69	31	85016	85017
18 x 24	450 x 600			.000300	0.0076	136	62	85034	85035
24 x 24	600 x 600	4	100	.000300	0.0076	244	111	85040	85041
24 x 36	600 x 900			.000400	0.0102	366	166	85061	85062
30 x 48	750 x 1200	6	150	.000700	0.0180	915	415	85088	85089
36 x 36	900 x 900			.000600	0.0152	824	374	85094	85095
36 x 48	900 x 1200			.000800	0.0203	1098	498	85116	85117
36 x 60	900 x 1500			.001000	0.0254	1373	623	85122	85123
36 x 72	900 x 1800	8	200	.001200	0.0304	2196	996	85134	85135
48 x 48	1200 x 1200	6	150	.000900	0.0229	1464	664	85140	85141
48 x 72	1200 x 1800	8	200	.001400	0.0355	2196	996	85161	85162
48 x 96	1200 x 2400			.002000	0.0508	3904	1771	85179	85180

Other sizes available by request. No ledge and two ledge plates listed, four ledge plates available by request.

Stands

Surface Plate Stands

Our stands are constructed from welded square steel tubing to provide exceptional strength and durability. Steel crossbeams are located at the proper support points to ensure maximum surface plate accuracy.

Stands are supplied with a scratch and abrasion resistant industrial powder coated finish. In addition to our standard beige gray color, other colors are available upon request and at an additional charge.

Stationary stands come with leveling adjustors with the typical adjustment being 2". Rolling stands are fabricated with two stationary and two swivel casters.

Stands require no assembly. Order by surface plate size.

Rolling Stand

Stationary Stand

Surface Plate Stands

Surface Plate Size (Length x Width)	Weight	Stationary with Leveling Screws EDP	Rolling with Casters EDP
12 x 18"	50lb	82220	82221
12 x 18 - 2 Ledge	50lb	82250	82251
18 x 18"	65lb	82222	82223
18 x 18 - 2 Ledge	65lb	82252	82253
18 x 24"	75lb	82224	82225
18 x 24 - 2 Ledge	75lb	82254	82255
24 x 24"	85lb	82226	82227
24 x 24 - 2 Ledge	85lb	82256	82257
24 x 36"	95lb	82228	82229
24 x 36 - 2 Ledge	95lb	82258	82259
24 x 48"	145lb	82230	82231
24 x 48 - 2 Ledge	145lb	82260	82261
30 x 48"	155lb	82266	82268
30 x 48 - 2 Ledge	155lb	82267	82269
36 x 36"	165lb	82232	82233
36 x 36 - 2 Ledge	165lb	82262	82263
36 x 48"	185lb	82234	82235
36 x 48 - 2 Ledge	185lb	82264	82265
36 x 60"	205lb	82236	82237
36 x 72"	235lb	82238	82239
48 x 48"	210lb	82270	82272
48 x 60"	250lb	82240	82241
48 x 72"	265lb	82242	82243
48 x 96"	345lb	82244	82245

Cabinet Type Surface Plate Stand

Cabinet Type Surface Plate Stands

Cabinet stands provide a strong, rigid support for standard plates listed, plus a handy place to store frequently used inspection tools and accessories.

The standard height is 34-36" (900mm) from the floor to top of the surface plate.

All stands are made from heavy-gage welded steel and have locking doors on the front. The 48" (1200mm) wide stands are equipped with doors front and back unless otherwise specified. Stands are supplied with leveling screws or casters as listed. Order by surface plate size. (Works on all thicknesses, and plate with our without ledges.)

Cabinet Type Surface Plate Stands

Surface Plate Size		Stand Weight		Stationary Stand	Rolling Stand
in	mm	lb	kg	EDP	EDP
24 x 36	600 x 900	190	86	81504	81506
36 x 36	900 x 900	245	111	81516	81518
36 x 48	900 x 1200	300	136	81513	81515
36 x 60	900 x 1500	365	166	81519	81521
36 x 72	900 x 1800	440	200	81522	81524
48 x 72	1200 x 1800	660	299	81525	81527

Toolmarkers' Flat

Granite Accessories

Toolmakers' Flats

These handy flats are small precision surface plates that are ideal for many inspection and checking uses throughout the plant.

They are especially well suited for layout work and offer an easy, portable reference for gaging small parts.

Offered in Crystal Pink® or Black Granite, Starrett Toolmakers' Flats are 12" long x 8" wide x 2" thick (300 x 200 x 50mm) and finished to an overall tolerance of .0001" (0.0025mm).

The shipping weight without case is 20 lb (9kg).

Toolmakers' Flats	
EDP	Description
81803	Crystal Pink® granite
81802	Black granite
81804	Sturdy felt lined case for toolmakers' flat

Three-Face Granite Tri-Squares

Three-Face Granite Tri-Squares provide an excellent, economical way for accurately checking the X-Y-Z axes on CNC machine tools and coordinate measuring machines.

Laying in the horizontal position, the X and Y axes can be checked for 90º squareness. With the square in the vertical position, tracing along the vertical edge of the square can check the perpendicularity of the Z axis.

Granite tri-squares may also be used in the same manner that steel squares would be used for the direct checking of squareness and straightness.

Tri-Square

Three-Face Granite Tri-Squares					
Accuracy Grade – EDP		Dimensions (Length x Height x Thickness)		Weight	
AA Laboratory .000025"/6" TIR (0.0006/150mm)	A Inspection .000050"/6" TIR (0.0012/150mm)	in	mm	lb	kg
81969	81970	6 x 9 x 3	150 x 225 x 75	18	8
81961	81962	9 x 12 x 3	225 x 300 x 75	23	10
81964	81965	12 x 18 x 4	300 x 450 x 100	60	27
81967	81968	18 x 24 x 4	450 x 600 x 100	120	54
81971	81972	24 x 36 x 6	600 x 900 x 150	570	259

Other sizes quoted on application.

Granite Accessories

Five-Face Master Squares

Five-Face Granite Master Squares are popular for accurately checking the X-Y-Z axes on CNC machine tools and coordinate measuring machines.

Laying in the horizontal position, the X and Y axes can be checked for 90º squareness. With the square in the vertical position, tracing along the vertical edge of the square can check the perpendicularity of the Z axis. By tracing along the top edge of the square while in the vertical position, it will check parallelism of the table in the X and Y axes.

Five-face master squares may also be used on any work that requires the checking of squareness or parallelism.

Five-Face Master Square

Five-Face Master Squares

Accuracy Grade – EDP		Dimensions (Length x Height x Thickness)		Weight	
AA Laboratory .000025"/6" TIR (0.0006/150mm)	A Inspection .000050"/6" TIR (0.0012/150mm)	in	mm	lb	kg
81919	81920	12 x 12 x 3	300 x 300 x 75	41	19
81922	81923	14 x 14 x 3	350 x 350 x 75	56	25
81925	81926	16 x 16 x 4	400 x 400 x 100	98	44
81931	81932	24 x 24 x 4	600 x 600 x 100	220	100
81933	81934	36 x 36 x 6	900 x 900 x 150	855	388

24 x 24 and larger have a thru-hole for lifting with a sling.

Granite Parallels

Granite Parallels

Produced in four standard sizes, Granite Parallels are useful in setting up work on surface plates and machine tables. They can also be used to elevate work above the surface of a plate to enable quick and easy inspection of piece parts with shoulders or steps.

Available in matched pairs, finished flat and parallel on two opposite narrow faces or all four faces. Single parallels available by request. Storage cases are available at extra cost.

Granite Parallels

Length x Width x Thickness		Grade AA Laboratory .000025"/6" TIR (0.0006/150mm)		2-Face	4-Face	Grade A Inspection .000050"/6" TIR (0.0012/150mm)		2-Face	4-Face	Weight per Pair		Case Only
in	mm	in	mm	EDP	EDP	in	mm	EDP	EDP	lb	kg	EDP
6 x .75 x 1	150 x 19 x 25	.000025	0.0012	81691	81692	.000050	0.0025	81693	81694	1	.5	81720
12 x 1 x 2	300 x 25 x 50			81695	81696			81697	81698	5	2.3	81721
18 x 1.5 x 3	450 x 37.5 x 75			81699	81700			81701	81702	18	8	81722
24 x 2 x 4	600 x 50 x 100			81703	81704			81705	81706	42	19	81723

Granite Accessories

Straight Edges

Our straight edges are produced from Master Pink granite, as are all of our accessories. Straight edges have a single long, narrow face finished flat. Lifting holes are provided on sizes 48" or larger.

Straight Edge

Straight Edges					
Grade A Inspection .000050"/6" TIR (0.0012/150mm)	Grade AA Laboratory .000025"/6" TIR (0.0006/150mm)	Length x Width x Thickness		Weight	
EDP	EDP	in	mm	lb	kg
81608	81648	2 x 4 x 24	50 x 100 x 600	22	10
81610	81650	2 x 6 x 36	50 x 150 x 900	48	22
81612	81652	3 x 8 x 48	75 x 200 x 1200	85	39
81613	81653	3 x 10 x 60	75 x 250 x 1500	198	90
81614	81654	3 x 12 x 72	75 x 300 x 1800	285	129

Five-Face V-Blocks

V-Blocks are ideal for supporting or holding cylindrical pieces during manufacturing or inspection. They are provided in matched pairs and have 5 finished faces. V-blocks have a nominal 90-degree "V", centered with and parallel to the bottom and two sides and square to the ends.

Five-Face V-Block

Five-Face V-Blocks					
Grade AA Laboratory .000050"/6" TIR (0.0012/150mm)	Grade A Inspection .000100"/6" TIR (0.0024/150mm)	Length x Width x Thickness		Weight	
EDP	EDP	in	mm	lb	kg
81533	81530	3 x 3 x 3	75 x 75 x 75	6	3
81534	81531	4 x 4 x 4	100 x 100 x 100	15	7
81535	81532	6 x 6 x 6	150 x 150 x 150	48	22
81537	81536	9 x 9 x 9	225 x 225 x 225	160	73
81539	81538	12 x 12 x 12	300 x 300 x 300	380	172

Six-Face Cubes

The granite cube has all six faces finished flat, perpendicular and parallel.

Six-Face Cube

Six-Face Cubes					
Grade AA Laboratory .000050"/6" TIR (0.0012/150mm)	Grade A Inspection .000025"/6" TIR (0.0006/150mm)	Length x Width x Thickness		Weight	
EDP	EDP	in	mm	lb	kg
81980	81981	3 x 3 x 3	75 x 75 x 75	3	1
81982	81983	4 x 4 x 4	100 x 100 x 100	8	4
81984	81985	6 x 6 x 6	150 x 150 x 150	24	11

Granite Accessories

Angle Plates

Angle plates provide a convenient and practical means of clamping and holding work in a vertical position. Their excellent finish and flatness make them very compatible for use with granite surface plate accuracies. The angle plates are available with either 2 or 4 finished faces. The 2-face angle plate has the bottom and the adjacent square face finished flat and square to one another. The 4-face is similar to the 2-face, but has the two adjacent sides finished flat and square to the other two faces, as well as being parallel to each other.

Four-Face Inserted Angle Plates

Inserted angle plates are available upon request. This product is the same as our standard angle plate, with the addition of metal discs inserted into one side. The inserted angle plates also have a main gauging face for magnetic chucking purposes and threaded inserts for clamping purposes.

Angle Plate

Angle Plates						Four-Face Inserted Angle Plates			
Size (Length x Width x Thickness)		Grade AA Laboratory .000025"/6" TIR (0.0006/150mm)		Grade A Inspection .000050"/6" TIR (0.0012/150mm)		Grade AA Laboratory .000025"/6" TIR (0.0006/150mm)	Grade A Inspection .000050"/6" TIR (0.0012/150mm)	Weight	
		2-Face	4-Face	2-Face	4-Face				
in	mm	EDP	EDP	EDP	EDP	EDP	EDP	lb	kg
4 x 4 x 4	100 x 100 x 100	81564	81565	81562	81563	81860	81861	8	4
6 x 6 x 6	150 x 150 x 150	81569	81568	81566	81567	81864	81865	24	11
6 x 9 x 12	150 x 225 x 300	81572	81573	81570	81571	81868	81869	72	33
9 x 9 x 9	225 x 225 x 225	81576	81577	81574	81575			80	36
12 x 12 x 12	300 x 300 x 300	81579	81578	81581	81580			190	86

Surface Plate Covers

We highly recommend the use of surface plate covers to protect your precision granite investment. Prevent abrasive build up on your plates with our covers made from heavy gage vinyl with a soft interior lining. Our covers provide a tough, durable, protective outside with a soft cushion inside.

Vinyl Covers		
	For Surface Plate Size	
EDP	in	mm
83020	12 x 12	300 x 300
83021	12 x 18	300 x 450
83022	18 x 18	450 x 450
83023	18 x 24	450 x 600
83024	24 x 24	600 x 600
83025	24 x 36	600 x 900
83026	24 x 48	600 x 1200
83034	30 x 48	750 x 1200
83027	36 x 36	900 x 900
83028	36 x 48	900 x 1200
83029	36 x 60	900 x 1500
83030	36 x 72	900 x 1800
83035	48 x 48	1200 x 1200
83031	48 x 60	1200 x 1500
83032	48 x 72	1200 x 1800
83033	48 x 96	1200 x 2400

Surface Plate Cleaner

To keep surface plates and other precision granite products in top condition, they should be cleaned frequently with Starrett Cleaner. This helps prevent abrasion of tools by dirt and other foreign particles.

The liquid cleaner, which also acts as a degreaser and rust inhibitor, should be used without water to minimize the risk of rusting tools.

Surface Plate Cleaner (left to right) - 1 gal., 1 qrt., 1lb, wipes

Surface Plate Cleaner	
EDP	Description
81820	55 gal. (208 liter) Drum
81822	1 gal. (3.8 liter), Case of four
81824	1 quart (1 liter), Case of 12
81828	Waterless Cleaner, Case of 12 1lb jars
81829	Waterless Cleaner Wipes, Case of 4 1.5lbs canisters

Surface Plate Calibration Products

Planekator Kits

The Planekator measures the overall flatness of your surface plate. It enables you to take direct indicator readings of your surface plate with autocollimator-accuracy, but without the complicated mathematics of the autocollimator. When used in conjunction with a Starrett Repeat Reading Gage, you'll have a very accurate idea of the flatness of your surface plate.

Each kit includes a precision granite straight edge, one adjustable support, one fixed support, a certified 0.00002" dial indicator and an indicator carriage. The entire kit is shipped in a heavy-duty travel case. The straight edge comes equipped with lifting handles, correction tape indicating the accuracy at 1" intervals, and includes a NIST-traceable certificate that meets ISO/IEC 17025 requirements.

The Planekator straight edge should be at least equal to the full width, and at least equal to 50% of the length of the largest surface you will be inspecting. For example, a 36" planekator straight edge can be used to calibrate any surface up to 36" x 72".

Part No.	Size (in)	Total Weight of Kit (lbs)	Straight Edge Accuracy (in)
80500	24	50	0.000050
80501	36	80	0.000075
80502	48	115	0.000100

Planekator

Repeat Reading Gage

High-precision, fast checking of surface plate repeatability with readings taken with a dial indicator. Detects local error, not overall flatness. The base has an adjustment knob for zero-setting the cartridge-type gaging head, and all contact points resting on the granite, including the contact point of the gaging cartridge, are carbide and lapped to a fine finish.

The instrument also accommodates AGD indicators with .375" (9.5mm) diameter stems.

Repeat Reading Gage	
EDP	Description
81320	Repeat Reading Gage
81321	Storage Case
81322	Travel Case
81850	0.00002" Dial Indicator

Repeat Reading Gage

Granite Calibration Services

Starrett calibration and resurfacing services are available for all types and brands of granite surface plates. When certification of surface tolerance is required, recalibration service with an autocollimator will be provided with accuracy traceable to the U.S. National Institute of Standards and Technology.

Calibration and resurfacing of surface plates, tri-squares, master squares, master angles, V-blocks, parallels and straight edges is available at our at Waite Park, MN location.

Resurfacing can also be done in your plant, saving crating and shipping costs as well as equipment down time. The cost is based on a square foot plate area with additional charge for travel. For a quotation, send us a list of plates, their sizes and the flatness tolerance required.

When resurfacing is done in your plant, tolerances for repeat reading of measurement will be per U.S. Federal Specification GGG-P-463c,and ASME B89.3.7-2013. Closer repeat reading tolerances of 25, 50 and 100 millionths can only be assured if the resurfacing is done at our facilities.

Recalibrations are provided by our Calibration Lab which is A2LA accredited.

Tolerances for Repeat Reading of Measurement				
	Full Indicator Movement (F.I.M.) in Microinches and (Microns)			
Diagonal Inches (mm)	Grade AA	Grade A	Grade B	Obtained
Through 30" (750)	35 (.9)	60 (1.5)	110 (2.8)	When not Specified
30-60" (750-1500)	45 (1.1)	70 (1.8)	120 (3)	
60-90" (1500-2250)	60 (1.5)	80 (2)	160 (4)	
90-120" (2250-3000)	75 (1.9)	100 (2.5)	200 (5)	
120-150" (3000-3800)	90 (2.3)	120 (3)	240 (6)	
Over 150" (3800)	100 (2.5)	140 (3.6)	280 (7)	
All Sizes	25 (.6)	50 (1.3)	100 (2.5)	When Specified

A repeat reading gage detects minute variations of the surface within the unilateral flatness tolerance of the whole surface.

VISION SYSTEMS

Our broad range of metrology systems are ideal for use in QC labs, research, engineering, and manufacturing environments where small to large scale high-precision measurement is critical.

Many systems are available in either manual or CNC configurations.

Manual Vision Metrology Systems

MV

MV300

MV Video Based Metrology Systems are easy-to-use, general purpose, non-contact measurement systems with zoom optics. A highly stable mechanical design and precision linear bearings achieve superb performance. X and Y dimensions are measured by moving the stage horizontally. Z height is measured by moving vertically to maintain focus. MV systems are ideal for Quality Labs, and manufacturing floor part measurement where short runs are common.

The operator interface is a MetLogix™ M3-equipped PC, while the part image, measurement graphics, and readings are displayed on a color touch-screen monitor. Single and multi-point measurements of 2D geometries, and report generation are standard.

MV OPTICS

Optical Parameters	6.5:1 Zoom Optics Dedicated
Optical magnification on CCD	0.47x to 3.0x
Total magnification on monitor	31x to 200x
Field of view	.39" to .06" (10 to 1.6mm)
Working distance	3.47" (88mm)
Camera CCD	1/3" CCD Array

OPERATOR INTERFACE

Feature	Touch-Screen Montior and M3 DXF/FOV Software
24" (60cm) color graphic monitor and PC	x
Windows®-based operating system	x
Wi-Fi network connectivity	x
Video edge detection	x
X-Y-Z measurements	x
2D geometric constructs plus height	x
FOV measurements integrated with X-Y stage motion	x
CAD file import and export	x
Automatic comparison of measurements to CAD files	x
Software developer	MetLogix™

MV300

Features and Specifications

- Zoom optics 6.5:1
- MetLogix™ M3 measuring software
- Video edge detection (VED)
- Fiber Optic or LED illumination, sub-stage bottom illumination and ring light surface illumination
- Easy manual X-Y-Z positioning via hand wheels

Options

- 0.5x, 1.5x, and 2.0x auxiliary lenses for zoom optics
- Coaxial LED or fiber optic surface illumination
- Calibration standards
- DXF/FOV option for automatic comparison to CAD files
- Modular system workstation

MV300 Dimensions

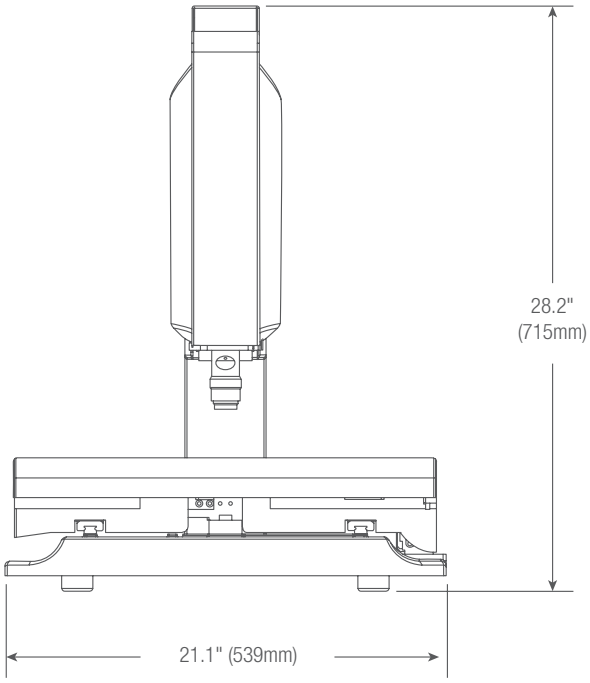

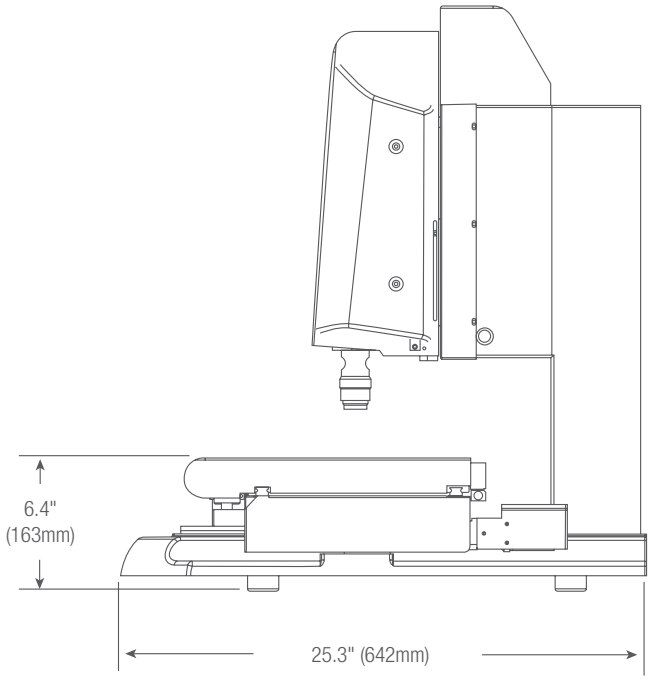

SPECIFICATIONS

	MV300
Net Weight	115lbs 53kg
Shipping Weight	345lbs 157kg
X-Y-Z Travel	12 x 6 x 5.5" 300 x 150 x 135mm
X-Y Accuracy	3.5µm + 5L/1000
Z Accuracy	2.5µm + 5L/1000

Manual Vision Metrology Systems

MVR

MVR200 AND MVR300

The MVR Manual Vision Metrology Systems are ideal for individual measurements or short runs. They are available with dedicated zoom optics or a quick-change bayonet lens mount which accepts interchangeable zoom optics or telecentric lenses for micron-level resolution and accurate field-of-view (FOV) measurements. These can encompass an entire small part up to 2.00 x 1.50" or a feature of a larger part and be seamlessly integrated with stage motion to measure parts with a length up to 8" (MVR200) or 12" (MVR300). The operator interface is the MetLogix™ M3 FOV software that displays a live video image of the part plus geometry tools and digital readings. The image of the part can be resized using zoom, and measurements can be taken by simply touching a feature on the touch-screen.

MVR hardware features include a granite base for maximum stability, precision recirculating ball linear guides for smooth, accurate stage motion and a motorized Z-axis with variable speed control.

MVR OPTICS

Optical Parameters	Interchangable Telecentric Optics						6.5:1 Zoom Optics Interchangeable	6.5:1 Zoom Optics Dedicated
Optical magnification on CCD	0.30x	0.50x	0.80x	1.0x	2.0x	4.0x	0.7x to 4.5x	0.47x to 3.0x
Total magnification on monitor	13x	22x	36x	45x	89x	178x	31x to 200x	31x to 200x
Field of view	.94" (24mm)	.55" (14mm)	.35" (9mm)	.27" (7mm)	.14" (3.5mm)	1.8" (1.8mm)	.39" to .06" (10 to 1.6mm)	.39" to .06" (10 to 1.6mm)
Working distance	4.3" (110mm)	4.3" (110mm)	4.3" (110mm)	4.3" (110mm)	4.3" (110mm)	4.3" (110mm)	3.47" (88mm)	3.47" (88mm)
Camera CCD	1/1.8"	1/1.8"	1/1.8"	1/1.8"	1/1.8"	1/1.8"	1/1.8" CCD Array	1/3" CCD Array

OPERATOR INTERFACE

Feature	M3 DXF/FOV Software
M3 controller housed in Z column	x
Wi-Fi network connectivity	x
Video edge detection	x
X-Y-Z measurements	x
2D geometric constructs plus height	x
FOV measurements integrated with X-Y stage motion	x
CAD file import and export	x
Automatic comparison of measurements to CAD files	x
Software developer	MetLogix™

MVR200

Features and Specifications

- Z travel: 8" (200 mm) with 2.0x auxiliary lens
- Manual X-Y positioning via hand wheels
- Motorized Z-axis positioning with variable speed control
- MetLogix™ M3 metrology software
- Video edge detection (VED)
- Field-of-view (FOV) measurements integrated with stage motion
- Renishaw scales for .00002" (0.5µm) of X and Y resolution
- Color digital video camera
- Collimated LED sub-stage illumination
- Ring light LED surface illumination
- Granite base

Options

- Optional dedicated or interchangeable 6.5:1 zoom lens
- Quick-change bayonet lens mount for interchangeable zoom or telecentric optics
- Auxiliary Lenses for Zoom Optics: 0.5x,1.5x and 2.0x
- Interchangeable telecentric lens magnifications including - .3x, .5x, .8x, 1.0x, 2.0x and 4.0x
- DXF/FOV option for automatic comparision to CAD files
- Modular system workstation
- Calibration standards

MVR Dimensions

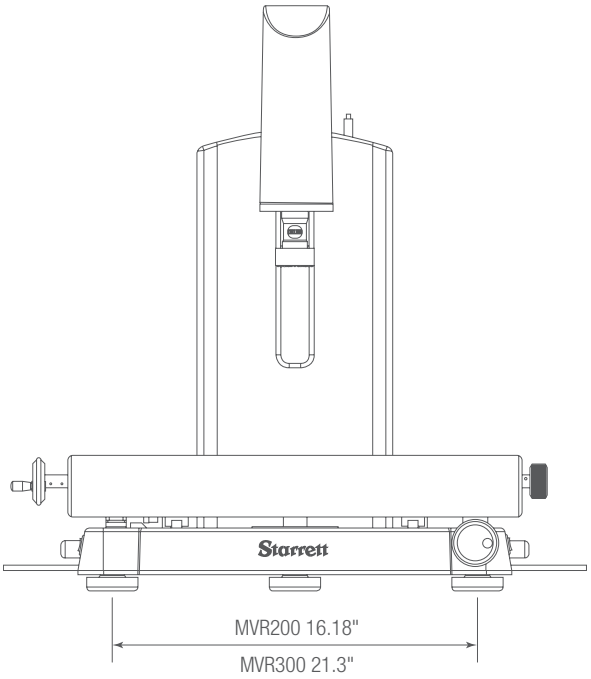

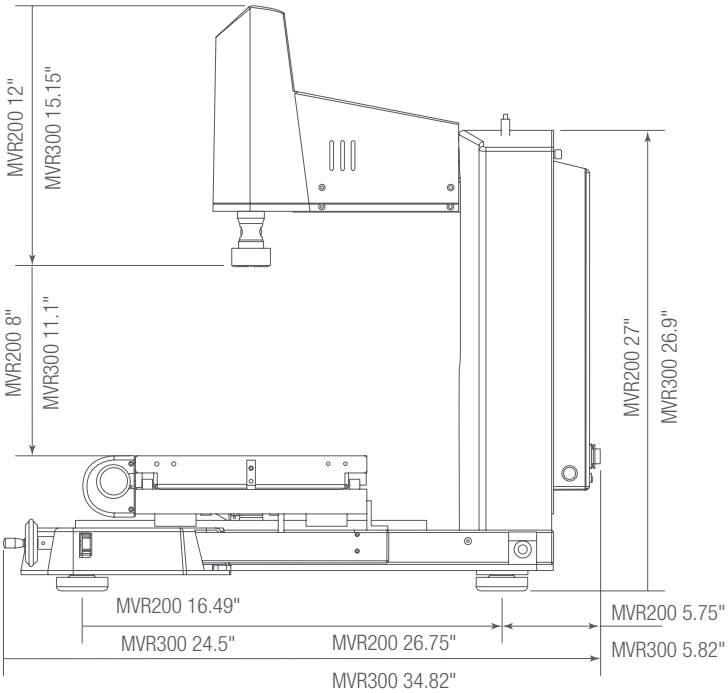

SPECIFICATIONS

	MVR200	MVR300
Net Weight	145lbs 90kg	230lbs 113kg
Shipping Weight	250lbs 115kg	300lbs 135kg
X-Y Travel	8 x 4" 200 x 100mm	12 x 8" 300 x 200mm
X-Y-Z Accuracy	2.5µm + 5L/1000	2.5µm + 5L/1000

Automatic Vision Metrology Systems

AV

AV300 AND AV350

The AV Automatic Vision Metrology Systems provide accurate 3-axis measurement capability (X-Y-Z) with hi-resolution video zoom optics and optional touch probe. The systems can be pre-programmed (CNC) for repetitive part inspection, or driven manually via a joystick and trackball for individual measurements. Superb performance is achieved by a highly stable mechanical design, with precision linear bearings. Throughput is maximized with either QC5000 or MetLogix™ M3 software controlling all features of Video Edge Detection (VED) and multiple channel Fiber Optic or LED illumination.

These automatic vision systems are ideal for quality assurance, inspection, and production runs. Flexible and powerful, the AV series allows users to cost effectively achieve maximum throughput of their inspection process. Measured data is effectively archived or networked to other devices.

AV OPTICS

	Dedicated Zoom Optics	
Optical Parameters	6.5:1	12:1
Optical magnification on CCD	0.47x to 3.0x	1.4x to 4.7x
Total magnification on monitor	31x to 198x	26x to 310x
Field of view width	.39" to .06" (10 to 1.6mm)	.44" to .047" (11 to 1.2mm)
Working distance	3.47" (88mm)	3.38" (86mm)
Camera CCD	1/3"	1/3"

OPERATOR INTERFACE

Feature	MetLogix™ M3	QC5000
24" (60cm) touch-screen monitor and PC	x	
External motion control unit	x	x
Windows®-based operating system	x	x
Wi-Fi network connectivity	x	x
CAD file import and export	x	x
Video edge detection	x	x
X-Y-Z measurements	x	x
2D geometric constructs	x	x
3D geometric constructs		x
CNC control capability	x	x
Report generation and archiving	x	x
Optional DXF/FOV software	x	
Software developer	MetLogix™	Metronics/Heidenhain

AV350 shown with system stand and control cart - included

AV300

Features and Specifications

- CNC operation or manual operation via joystick and trackball
- Reading resolution 4µin (0.1µm)
- MetLogix™ M3 metrology software
- Magnification on 24" monitor, 1:1 pixel setting: 37x to 240x with 6.5:1 zoom, 25x to 240x with 12:1 zoom
- Multiple channel Fiber Optic or LED Illumination
- Cast aluminum base for AV300. Granite base on AV350
- 1.3 mega-pixel color digital video camera

Options

- 6.5:1 or 12:1 dedicated zoom optics
- Optional 0.5x, 1.5x and 2.0x auxiliary lenses
- Renishaw touch probe kit
- Ergonomic workstation (machine stand and control cart standard (with AV350)
- LED dark-field quadrant illuminator
- DXF/FOV option for automatic comparison to CAD files
- Calibration standards
- Part fixtures and work-holding devices

AV300 Dimensions

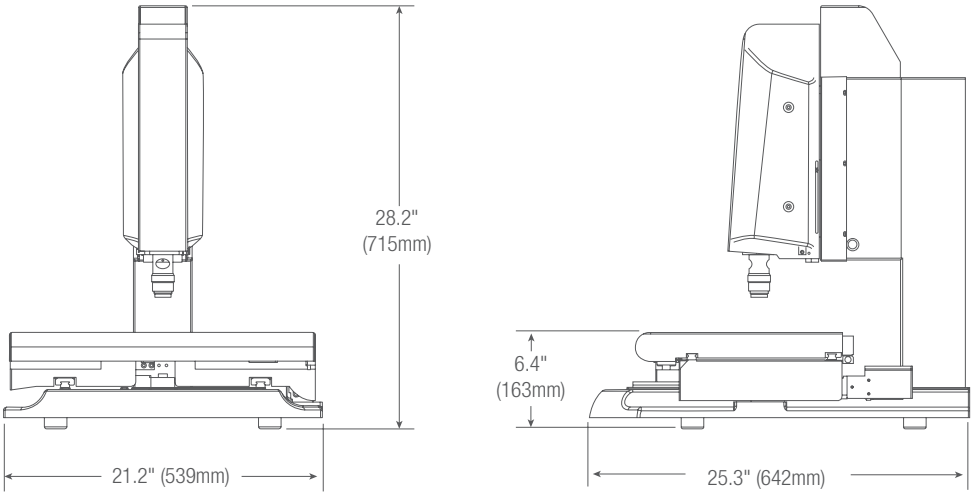

AV350 Dimensions

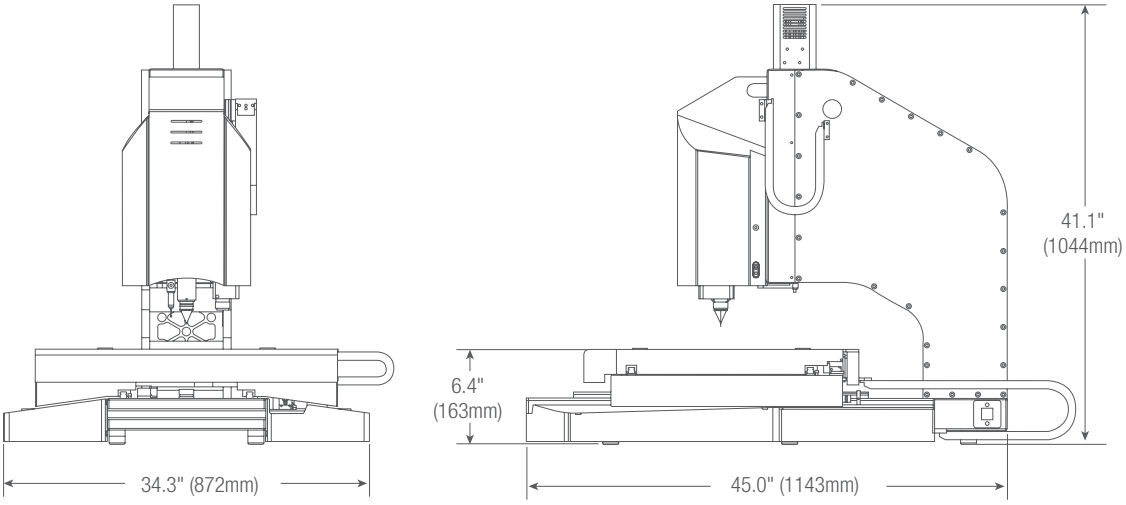

SPECIFICATIONS

	AV300	AV350
Net Weight	125lbs 57kg	409lbs 185kg
Shipping Weight	345lbs 157kg	1,275lbs 579kg
X-Y-Z Travel	12 x 6 x 5.5" 300 x 150 x 140mm	14 x 14 x 8" 350 x 350 x 200mm
X-Y Accuracy (µm)	E2 = 1.9µm + 5L/1000	E2 = 2.5µm + 5L/1000
Z Accuracy (µm)	E1 = 2.5µm + 5L/1000	E1 = 2.5µm + 5L/1000

Automatic Vision Metrology Systems

AVR

AVR200 AND AVR300

The AVR CNC Automatic Vision Metrology Systems are ideal for repetitive measurements and automatic comparison to CAD files. Available with dedicated interchangeable telecentric lenses for micron-level resolution and accurate field-of-view (FOV) measurements. These can encompass an entire small part up to 2.00 x 1.50" or a feature of a larger part and be seamlessly integrated with stage motion to measure parts with a length up to 8" (AVR200) or 12" (AVR300). MetLogix™ M3 software capabilities include 3-axis measurements and 2D geometric constructs (points, lines, angles, rectangles). Systems are also touch probe compatible.

AVR OPTICS

Optical Parameters	Telecentric Optics						Dedicated Zoom Optics 6.5:1*	Dedicated Zoom Optics 12:1
Optical magnification on CCD	0.30x	0.50x	0.80x	1.0x	2.0x	4.0x	0.47x to 3.0x	1.4x to 4.7x
Total magnification on monitor	13x	22x	36x	45x	89x	178x	31x to 198x	26x to 310x
Field of view width	.94" (24mm)	.55" (14mm)	.35" (9mm)	.27" (7mm)	.14" (3.5mm)	.07" (1.8mm)	.39" to .06" (10 to 1.6mm)	.44" to .047" (11 to 1.2mm)
Working distance	4.3" (110mm)	4.3" (110mm)	4.3" (110mm)	4.3" (110mm)	4.3" (110mm)	4.3" (110mm)	3.47" (88mm)	3.47" (86mm)
Camera CCD	1/1.8"	1/1.8"	1/1.8"	1/1.8"	1/1.8"	1/1.8"	1/3"	1/3"

* 6.5:1 available as interchangeable zoom optics

OPERATOR INTERFACE

Feature	All-in-One PC with M3 DXF/FOV Software
M3 controller housed in Z column	x
24" (60cm) color graphic touch-screen montior and PC	x
Windows®-based operating system	x
Wi-Fi network connectivity	x
Video edge detection	x
X-Y-Z measurements	x
2D geometric constructs plus height	x
FOV measurements integrated with X-Y stage motion	x
CAD file import and export	x
Automatic comparison of measurements to CAD files	x
Software developer	MetLogix™

AVR200

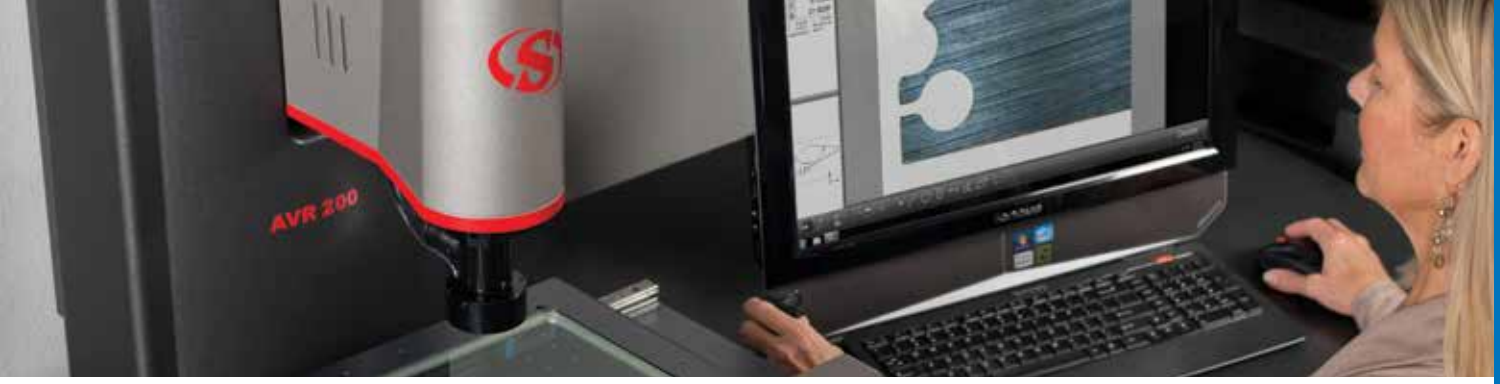

Features

- Z travel: 8" (200 mm) with 2.0x auxiliary lens
- Full CNC X-Y-Z positioning or motorized manual positioning using a pendant with joystick and trackball
- Video edge detection (VED)
- Field-of-view (FOV) measurements integrated with stage motion
- Renishaw scales for .00002" (0.1µm) of X,Y and Z axis
- Color digital video camera
- Collimated LED sub-stage illumination
- Ring Light LED surface illumination
- Granite base

Options

- Dedicated 6.5:1 or 12:1 CNC zoom optics
- Quick-change bayonet lens mount for telecentric optics
- Interchangeable bayonet mount lenses - 0.30x, 0.50x, 0.80x, 1.0x, 2.0x, 4.0x telecentric optics and 6.5-1 manual zoom lens
- 0.5x, 1.5x and 2.0x auxiliary lenses for zoom optics
- Renishaw touch probe kit
- Quadrant LED surface illumination for zoom optics
- DXF/FOV option for automatic comparison to CAD files
- Modular system workstation
- Calibration standards
- Part fixtures and work holding devices

AVR Dimensions

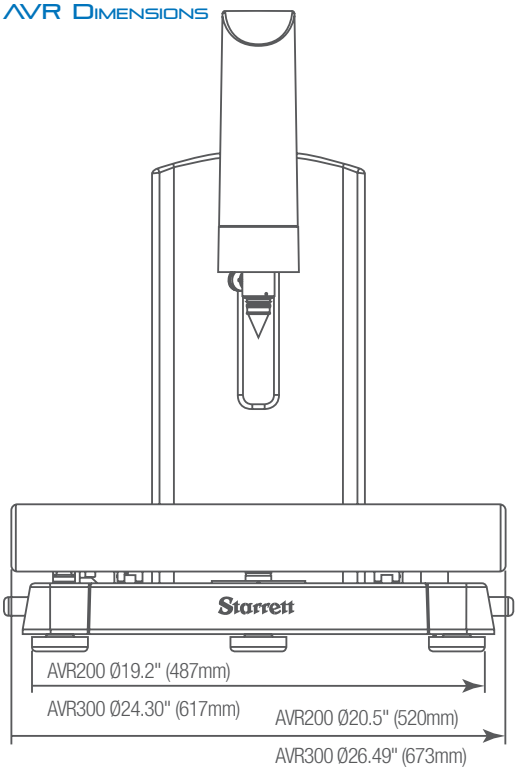

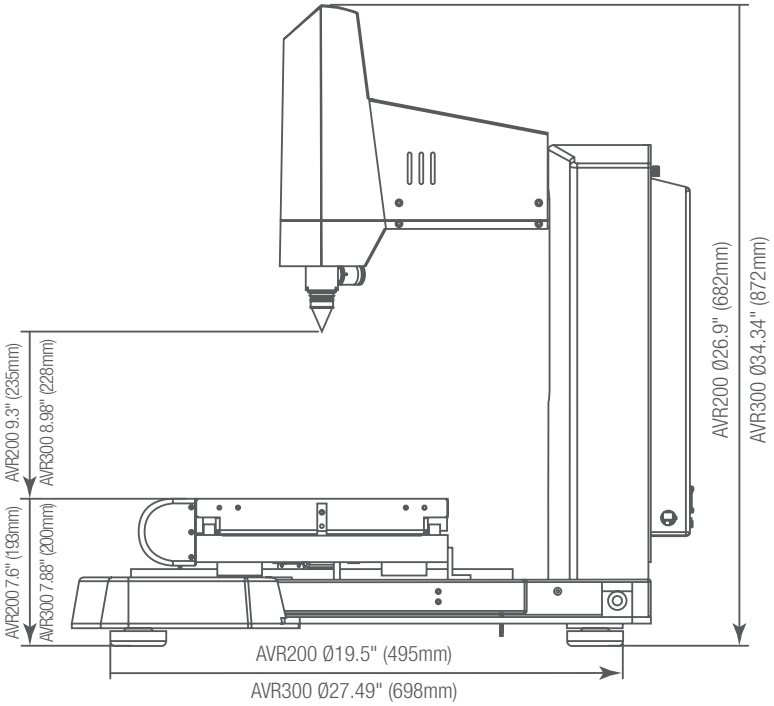

SPECIFICATIONS

	AVR200	AVR300
Net Weight	145lbs 66kg	225lbs 102kg
Shipping Weight	250lbs 115kg	300lbs 135kg
Dimensions (H x W x D)	34 x 20.5 x 27" 863 x 520 x 685mm	34 x 29.2 x 35" 865 x 740 x 890mm
X-Y-Z Travel	8 x 4 x 8" 200 x 100 x 200mm	12 x 8 x 8" 300 x 200 x 200mm
X-Y Accuracy	1.9µm + 5L/1000	1.9µm + 5L/1000
Z Accuracy	2.5µm + 5L/1000	2.5µm + 5L/1000

Automatic Vision Metrology Systems

AV300+

MULTI-SENSOR

An enhanced version of the popular AV300 CNC video-based measurement system. The AV300+ system improves measuring performance by utilizing a precision granite base along with an extended travel Z column, delivering 12 x 6 x 8" (300 x 150 x 200mm) X-Y-Z measuring range. The system is a servo driven motion platform for enhanced performance and includes a 12:1 zoom lens, hi-resolution digital color camera and a choice of fiber optic or LED Illumination. Complete with vibration isolation and integrated machine stand, the AV300+ delivers more capability for multi-sensor requirements. The AV300+ is powered by QC5300 software to handle a variety of measuring applications. Systems are available with vision, touch probe, laser sensors and rotary fixtures.

AV+ OPTICS

Optical Parameters	Dedicated Zoom Optics 12:1
Optical magnification on CCD	1.4x to 4.7x
Total magnification on monitor	26x to 310x
Field of view width	.44" to 0.47" (11 to 1.2mm)
Working distance	3.47" (86mm)
Camera CCD	1/3"

OPERATOR INTERFACE

Feature	QC5300
24" (60cm) color graphic touch-screen monitor and PC	x
External motion control unit	x
Windows®-based operating system	x
Wi-Fi network connectivity	x
CAD file import and export	x
Video edge detection	x
X-Y-Z measurements	x
2D geometric constructs	x
3D geometric constructs	x
CNC control capability	x
Report generation and archiving	x
Software developer	Metronics/Heidenhain

AV300+

AV300+ shown with system stand and control cart - included

Features and Specifications

- 12:1 Zoom Optics with co-axial illumination
- Precision Granite base construction
- System stand and control cart standard
- Touch probe compatible
- Touch probe change rack compatible
- CNC Rotary Axis compatible
- Laser Probe compatible

Options

- 0.5x, 1.5x and 2.0x auxiliary lenses for zoom optics
- Quadrant LED dark-field surface illumination
- Renishaw touch probe kit
- 2 or 4 bay touch probe change rack compatible
- Optimet laser probe
- CNC rotary axis fixture
- Calibration standards
- Part fixtures and work-holding device

AV300+ Dimensions

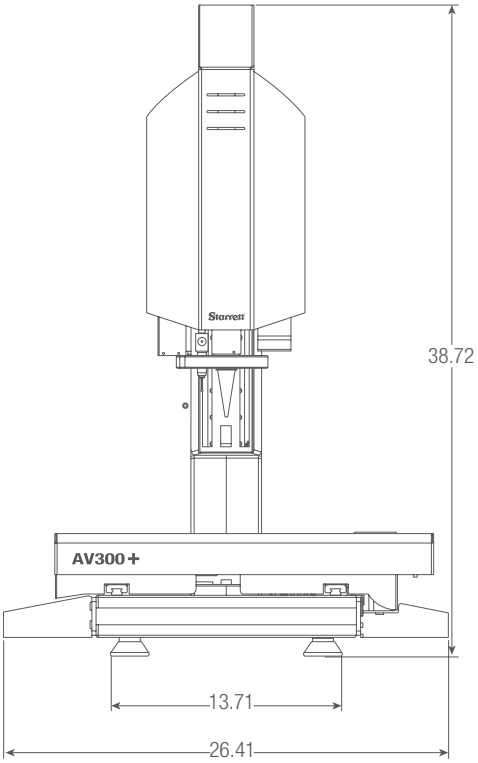

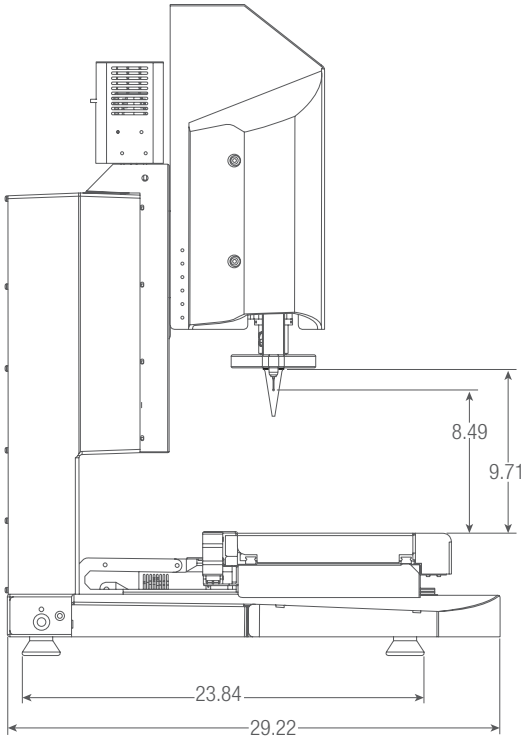

SPECIFICATIONS

	AV300+
Net Weight	210lbs 95kg
Shipping Weight	345lbs 157kg
X-Y Accuracy	E2 = 1.9 + 5L/1000
Z Accuracy	E1 = 2.5 + 5L/1000

Automatic Vision Metrology Systems

AV350+

MULTI-SENSOR

Offering similar attributes and performance to the AV300+ with an expanded measurement envelope of 14 x 14 x 8" (350 x 350 x 200mm) X-Y-Z measuring range for those larger part and payload measurement requirements. Systems are available with vision, touch probe, laser sensors and rotary fixtures.

AV+ OPTICS

Optical Parameters	Dedicated Zoom Optics 12:1
Optical magnification on CCD	1.4x to 4.7x
Total magnification on monitor	26x to 310x
Field of view width	.44 to .047" (11 to 1.2mm)
Working distance	3.47" (86mm)
Camera CCD	1/3"

OPERATOR INTERFACE

Feature	QC5300
Desktop PC with monitor	x
External motion control unit	x
Windows®-based operating system	x
Wi-Fi network connectivity	x
CAD file import and export	x
Video edge detection	x
X-Y-Z measurements	x
2D geometric constructs	x
3D geometric constructs	x
CNC control capability	x
Report generation and archiving	x
Software developer	Metronics/Heidenhain

Renishaw Touch Probe Kit

AV350+

Dark Field Quadrant Illuminator

Features and Specifications

- 12:1 Zoom Optics with co-axial illumination
- Precision Granite base construction
- System stand and control cart standard

Options

- 0.5x, 1.5x and 2.0x auxiliary lenses for zoom optics
- Quadrant LED surface illumination for zoom optics
- Renishaw touch probe kit
- Optimet laser probe
- 2 or 4 touch probe change rack compatible
- CNC rotary axis fixture
- Calibration standards
- Part fixtures and work holding devices

AV350+ Dimensions

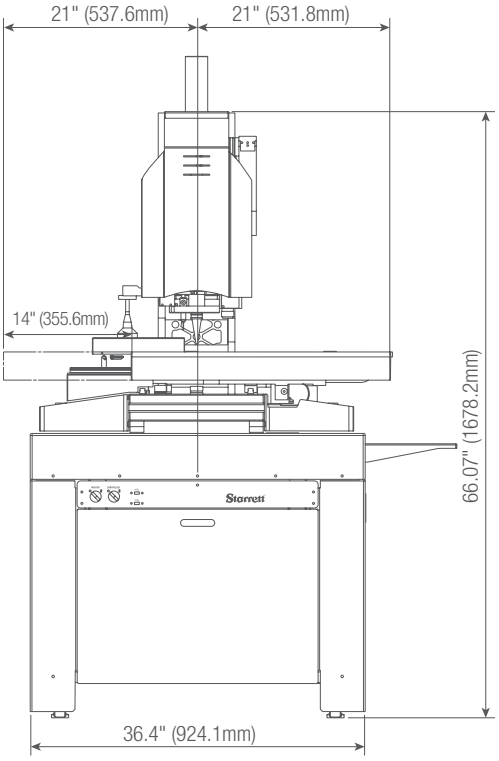

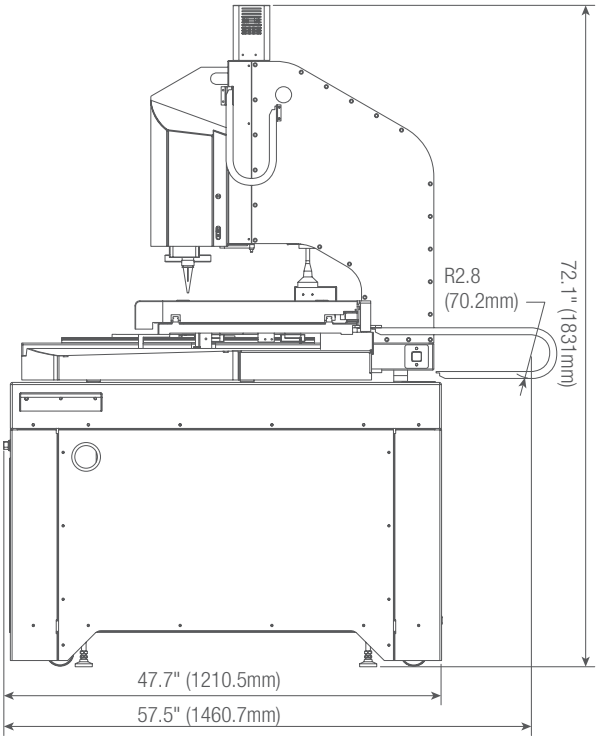

SPECIFICATIONS

	AV350+
Net Weight	845lbs 384kg
Shipping Weight	1300lbs 590kg
X-Y Accuracy	E2 = 2.5 + 5L/1000
Z Accuracy	E1 = 2.5 + 5L/1000

Large Format Premier

LF

LF AND LFM

Our LF Premier machines offer X-Y travel from 18" (460mm) to a generous 28" (711mm). Z travel is 8" (200mm). (Larger sizes available upon request.) Increased accuracy helps you verify critical dimensions. Ideal for use in QC labs, research, engineering, or manufacturing environments.

LF models utilize air-rearing and linear motor X-Y transport for ultra smooth, high speed positioning. LFM models are equipped with precision mechanical bearing linear guides driven by precision ground ball screws and servo motors.

LF OPTICS

Optical Parameters	Dedicated Zoom Optics 6.5:1	12:1
Optical magnification on CCD	0.47x to 3.0x	1.4x to 4.7x
Total magnification on monitor	31x to 198x	26x to 310x
Field of view width	.39 to .06" (10 to 1.6mm)	.44 to .047" (11 to 1.2mm)
Working distance	3.47" (88mm)	3.47" (86mm)
Camera CCD	1/3"	1/3"

OPERATOR INTERFACE

Feature	MetLogix™ M3	QC5300
21.5" monitor with touch screen	x	
21.5" monitor with desktop PC	x	x
External motion control unit	x	x
Windows®-based operating system	x	x
Wi-Fi network connectivity	x	x
CAD file import and export	x	x
Video edge detection	x	x
X-Y-Z measurements	x	x
2D geometric constructs	x	x
3D geometric constructs		x
CNC control capability	x	x
Report generation and archiving	x	x
Software developer	MetLogix™	Metronics/Heidenhain

LF463

Features and Specifications

- Transports are driven on air bearings by hi-speed (up to 30" per second), zero maintenance, balanced linear motors, or precision mechanical linear bearings, which are close-looped to precision hi-resolution scales in all three axes
- Adjustable ergonomic workstation including a compact control panel and standard keyboard
- Massive granite base, bridge and mechanical or air-bearing ways for superior machine stability and precision
- Choice of QC5300 or MetLogix™ M3 Software or QC5000
- 21.5" monitor with OC5300 or M3 software
- LED Surface Ring Illumination
- LED Transmitted Illumination
- LED Coaxial Illumination
- Digital Video Color Camera: 1.2 MP, 1/3" SXVGA sensor

Options

- Dedicated 6.5:1 or 12:1 CNC zoom optics
- 0.5x, 1.5x and 2.0x auxiliary lenses for zoom optics
- Quadrant LED surface illumination
- DXF/FOV option for automatic comparison to CAD designs
- 24" (60cm) touch-screen monitor for M3
- CNC rotary axis fixture
- Renishaw touch probe kit
- Touch probe spotter camera for viewing critical placement of touch probe points as well as a touch probe changing rack (with QC5300)
- Calibration standards
- Part fixtures and work holding devices

LF Dimensions

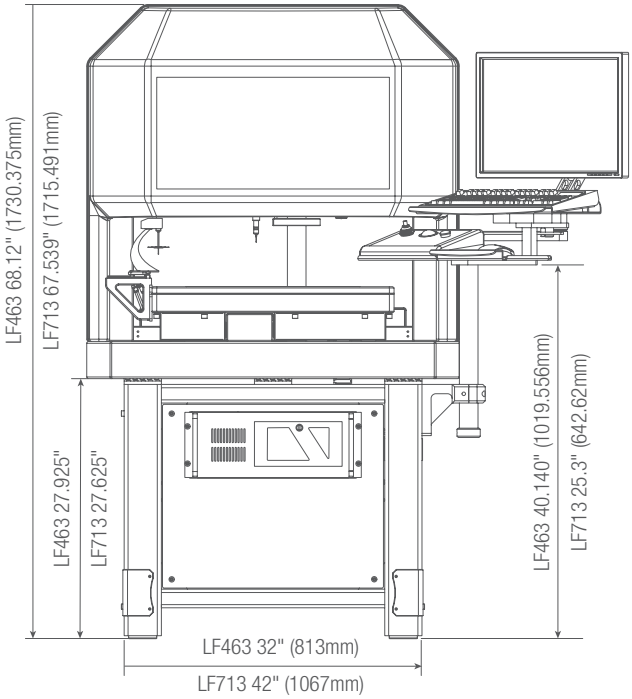

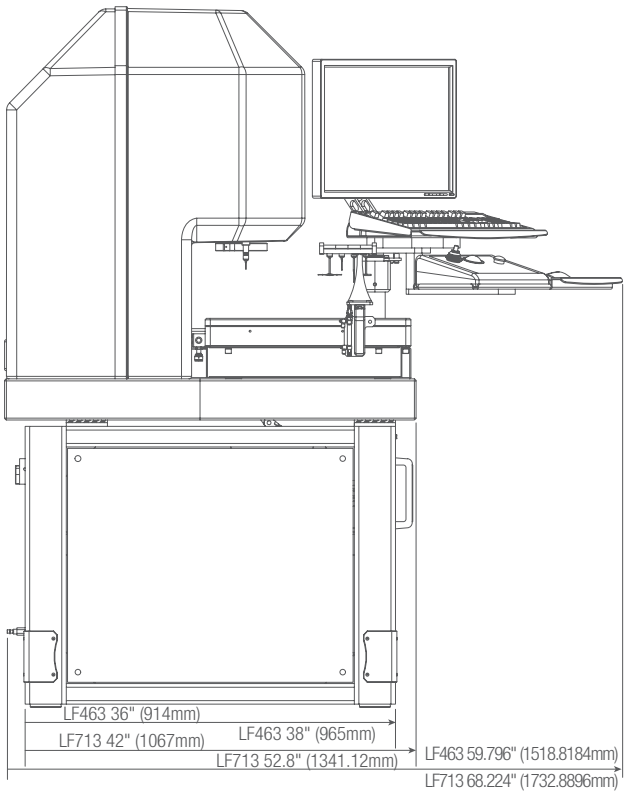

SPECIFICATIONS

Model	LF463†	LF713†	LFM463*	LFM713*
Dimensions (W x D x H)	40 x 40 x 68" (102 x 102 x 173cm)	50 x 64 x 68" (127 x 163 x 173cm)	40 x 40 x 68" (102 x 102 x 173cm)	50 x 64 x 68" (127 x 163 x 173cm)
Net Weight	1500lb (726kg)	2700lb (1225kg)	1500lb (726kg)	2700lb (1225kg)
Shipping Weight	2300lb (1043kg)	3600lb (1630kg)	2300lb (1043kg)	3600lb (1630kg)
Accuracy Stage X and Y	E2=2.5 + 5L/1000	E2=2.5 + 5L/1000	E2=3.5 + 5L/1000	E2=3.5 + 5L/1000
Accuracy Stage Z	E1=2.5 + 5L/1000	E1=2.5 + 5L/1000	E1=2.5 + 5L/1000	E1=2.5 + 5L/1000

† Air Bearing
* Mechanical bearing

Horizontal Digital Video Comparators

HDV

HDV300 AND HDV400

HDV300 CNC, HDV400 CNC AND HDV500 CNC

The HDV Horizontal Digital Video Comparators combine the best features of a horizontal optical comparator and a vision metrology system. With a rigid steel design, they are configured like a traditional horizontal comparator. The workstage is the same as the Starrett field-proven comparators. The heart of the HDV system centers on a uniquely designed interchangeable lens mounting system coupled to a hi-resolution 5 mega-pixel digital video camera. The system is available with a choice of seven telecentric lenses for micron-level resolution and optical distortion as low as 0.001% for accurate field-of-view (FOV) measurements. With MetLogix™ M3 software DXF CAD files can be imported and 2D Go/No-Go digital overlays can be developed directly from the CAD files. Video edge detection (VED) allows real-time interaction of the imported file with the video image of the part being inspected. Productivity, speed and accuracy are all enhanced. Systems are available in manual or CNC control.

HDV300/400 OPTICS

System Parameter	Telecentric Lenses							6.5:1 Zoom Lens	
Optical magnification	0.14x	0.30x	0.50x	0.80x	1.0x	2.0x	4.0x	0.7x	4.5x
Magnification on 24" monitor	8.6x	18.5x	21x	49x	62x	124x	247x	58x	363x
Field of view width	2.36" (63mm)	1.14" (29mm)	.59" (15mm)	.43" (11mm)	.35" (9mm)	.18" (4.3mm)	.09" (2.3mm)	.4" (11mm)	.05" (1.5mm)
Field of view height	2.0" (51mm)	0.94" (24mm)	0.56" (14mm)	0.35" (8.9mm)	0.28" (7.1mm)	0.14" (3.7mm)	0.07" (1.8mm)	0.40" (10.1mm)	0.62" (15.6mm)
Working distance	4.3" (110mm)	4.3" (110mm)	4.3" (110mm)	4.3" (110mm)	4.3" (110mm)	4.3" (110mm)	4.3" (110mm)	3.4" (88mm)	3.4" (88mm)
Optical Distortion, %	0.001	0.001	0.002	0.002	0.005	0.005	0.006	N/A	N/A

OPERATOR INTERFACE

Feature	MetLogix™ M3
PC installed in main housing	x
24" color graphics touch screen	x
Windows®-based operating system	x
X-Y-Q (angle) measurements	x
2D geometry software with skew	x
Video edge detection	x
CAD file import and export	x
FOV measurements	x
Elimination of overlays	x
64-bit Intel® processor	x
Software developer	MetLogix™

HDV300

Features and Specifications

- Steel construction with hard anodized stage tooling plate
- 21.3 x 5.1" (540 x 130mm) workstage
- 110lbs (50kg) maximum load capacity
- 2" (51mm) of focus travel
- Helix adjustment with ±15° Vernier scale
- Manual X-Y and focus positioning via hand wheels or CNC with joystick and trackball positioning
- Heidenhain glass scales for 0.5µm (.00002") X and Y resolution
- LED illumination for surface and profile lighting
- 5 mega-pixel color video camera (2448 x 2058 pixels)
- Software and part image displayed on 24" (60cm) touch-screen color monitor (1920 x 1080 pixels)

Options

- 6 interchangeable telecentric lenses for fields of view from 1.14 to 0.09 (29 to 2.3mm) (patent US 9,360,435 B2)
- Interchangeable 6.5:1 zoom optics
- Systems are also available with fixed .14x lens offering 2.5 x 1.9" (63 x 47mm) FOV. (Lenses are not interchangeable on this model)
- MetLogix™ M3 software with DXF/FOV option
- Optional CNC controls
- 23" or 32" purpose built cabinet stands
- Extensive line of calibration standards, work-holding devices and accessories

HDV300 / HDV400 Dimensions

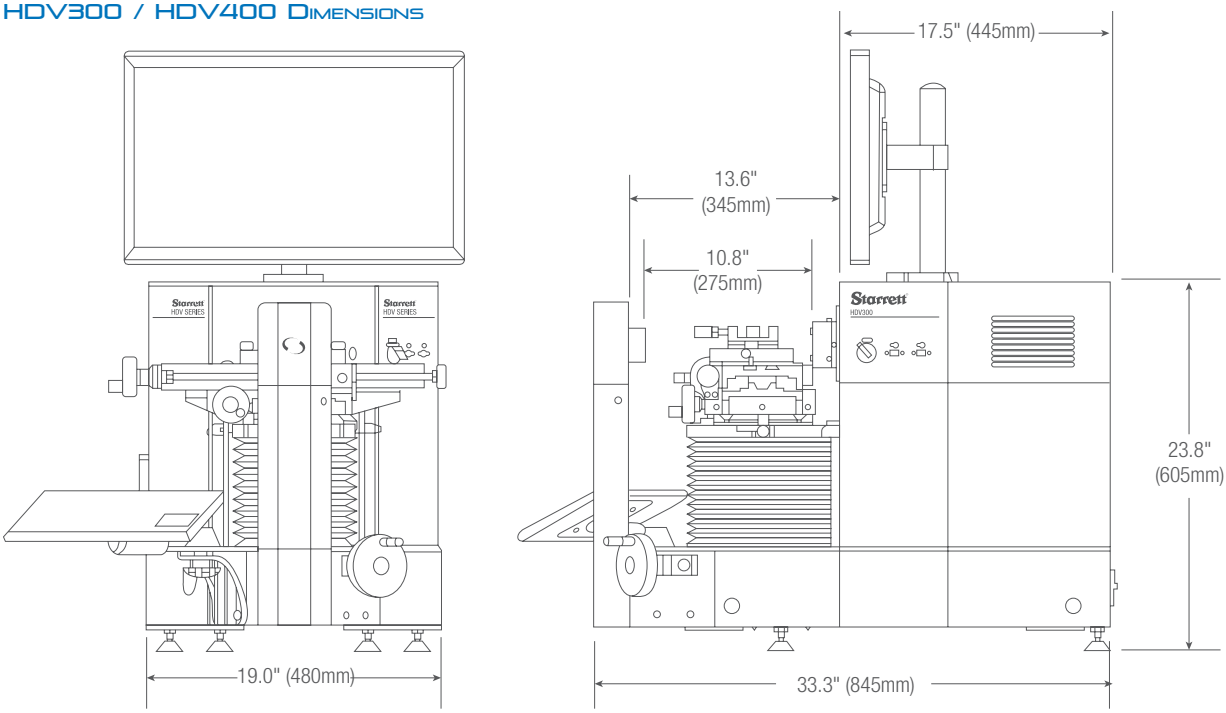

SPECIFICATIONS

	HDV300	HDV400
Net Weight	220lbs 100kg	230lbs 105kg
Shipping Weight	430lbs 195kg	440lbs 200kg
X-Y Travel	12 x 6" 300 x 150mm	16 x 6" 400 x 150mm
X-Y Accuracy	E2 = 3.0 µm + L/33	E2 = 3.0 µm + L/33

NEW!

Horizontal Digital Video Comparators

HDV

HDV500 CNC

The HDV500 CNC Digital Video Comparator offers the best features of a large, floor standing, horizontal optical comparator and a vision metrology system. The HDV500 has a long 20 x 8" X-Y stage and heavy-duty steel construction. The workstage is the same as the popular HF600 and HF750. The heart of the HDV system centers on a uniquely designed interchangeable lens mounting system (patent pending) to a hi-resolution 5 mega-pixel digital video camera. The HDV500 is available with zoom optics or a choice of three telecentric lens options for micron-level resolution and for accurate Field-of-View (FOV) mesaurements.

WIth MetLogix™ M3 Metrology software, DXF CAD files can be imported and 2D Go-No-Go digital overlays can be developed directly from the CAD files. Video edge detection (VED) allows real-time interaction of the imported file with the video image of the part being inspected. Productivity speed and accuracy are all enhanced.

HDV500 OPTICS

System Parameter	Telecentric Lenses			6.5:1 Zoom Lens	
Optical magnification	0.11x	0.16x	0.24x	0.7x	4.5x
Magnification on 42" monitor**	6.5x	9.3x	14.7x	41x*	262x*
Field of view width	3.0" (76mm)	2.1" (54mm)	1.4" (35mm)	47" (12mm)	.40" (10mm)
Field of view height	2.5" (64mm)	1.8" (45mm)	1.1 (29mm)	.46" (11.7mm)	.072" (1.8mm)
Working distance	9.0" (228mm)	6.25"(159mm)	6.0" (150mm)	140mm	140mm
Optical Distortion, %	0.02%	0.03%	0.04%	–	–

*Best fit software setting

**Note that screen magnification is variable based on setting in M3 software

OPERATOR INTERFACE

Feature	MetLogix™ M3
PC installed in main housing	x
42" (1070cm) color monitor	x
Windows®-based operating system (1080 pixels)	x
X-Y-Q (angle) measurements	x
2D geometry software with skew	x
Video edge detection	x
CAD file import and export	x
FOV measurements	x
Elimination of overlays	x
64-bit Intel® processor	x
Software developer	MetLogix™

HDV500

Starrett®

Features and Specifications

- Steel construction with nickel plated stage tooling plate
- 21.3 x 5.1" (540 x 130mm) workstage top plate
- CNC controls
- 330lb (150kg) maximum load capacity
- 3" (75mm) of focus travel
- Helix angle adjustment with ±15° Vernier scale
- X-Y and focus positioning via joystick and trackball positioning
- Heidenhain glass scales for 0.5µm (.00002") X and Y resolution
- LED illumination for surface and profile lighting
- 5 mega-pixel black and white digital video camera (2448 x 2058 pixels)
- Floor standing model

Options

- 6.5:1 zoom optics interchangeable
- 3 interchangeable telecentric lenses for fields of view including - 1.4 x 1.1", 2.1 x 1.8" and 3.0 x 2.5" (patent pending)
- MetLogix™ profile fitting software
- Extensive line of accessories, workholding devices and calibration standards

HDV500 Dimensions

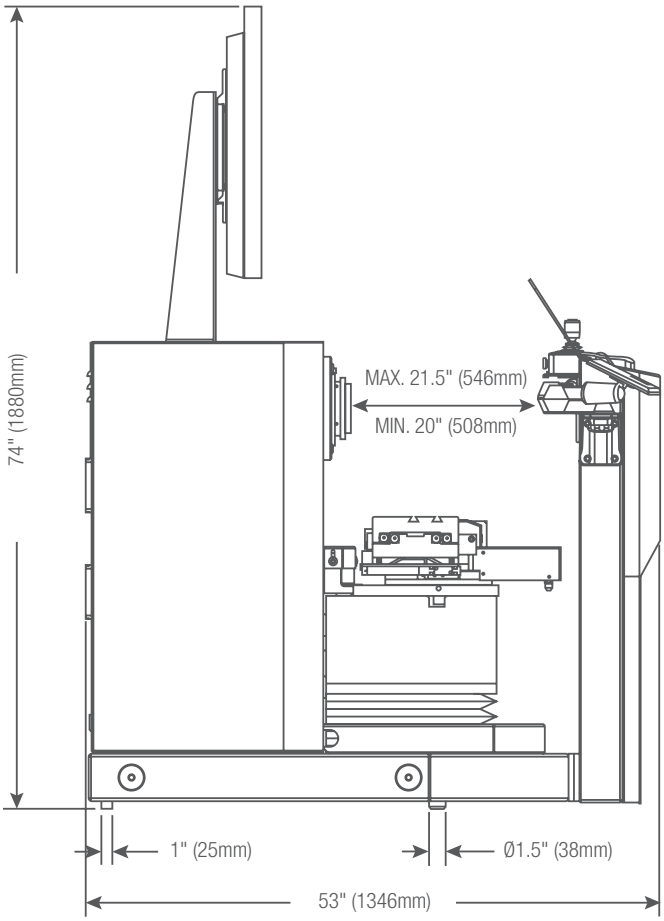

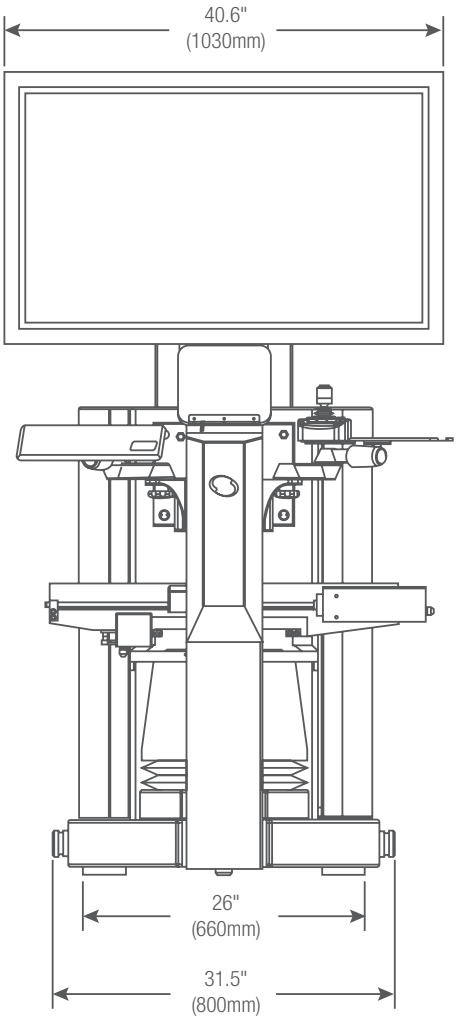

SPECIFICATIONS

	HDV500
Net Weight	1330lbs 600kg
Shipping Weight	1400lbs 635kg
X-Y Travel	20 x 8" 500 x 200mm
X-Y Accuracy	E2 = 3.0 µm + L/33

Specifications and Options

Model	MV300	MVR200	MVR300	AV300	AV350	AVR200
Bench-Top System	X	X	X	X	–	X
Floor-Standing System	–	–	–	–	X	–
Part View Orientation	Vertical	Vertical	Vertical	Vertical	Vertical	Vertical
X-Y-Z Travel (in)	12 x 6 x 5.5"	8 x 4 x 8"	12 x 8 x 8"	12 x 6 x 5.5"	14 x 14 x 8"	8 x 4 x 8"
X-Y-Z Travel (mm)	300 x 150 x 135mm	200 x 100 x 200mm	300 x 200 x 200mm	300 x 150 x 135mm	350 x 350 x 200mm	200 x 100 x 200mm
Z Axis Measuring	Optional	Optional	Optional	Standard	Standard	Standard
CNC	–	–	–	Standard	Standard	Standard
X-Y Accuracy (µm)	E2 = 3.5µm + 5L/1000	E2 = 2.5µm + 5L/1000	E2 = 2.5µm + 5L/1000	E2 = 1.9µm + 5L/1000	E2 = 2.5µm + 5L/1000	E2 = 1.9µm + 5L/1000
Z Accuracy (µm)	E1 = 2.5µm + 5L/1000	E1 = 2.5µm + 5L/1000	E1 = 2.5µm + 5L/1000	E1 = 2.5µm + 5L/1000	E1 = 2.5µm + 5L/1000	E1 = 2.5µm + 5L/1000
Scale Resolution	0.5µm	0.5µm	0.5µm	0.1µm	0.1µm	0.1µm
Multi-Sensor Compatible	–	–	–	–	–	–
Base	Cast Aluminum	Granite	Granite	Cast Aluminum	Granite	Granite
Control System/Software	M3	M3	M3	M3 or QC5300	M3	M3
Display	21.5" Touchscreen PC	21.5" Touchscreen PC	21.5" Touchscreen PC	21.5" Touchscreen PC (M3) or 24"Monitor	21.5" Touchscreen PC	21.5" Touchscreen PC
Zoom Optics - Standard	6.5:1	6.5:1	6.5:1	6.5:1	12:1	6.5:1 - 2 LED 12:1 - 3 LED
Zoom Optics - Optional	–	–	–	–	–	–
Telecentric Optics	–	–	–	–	–	–
Digital Video Camera	1.3 MP Color	1.3 or 2.0 MP Color with Telecentric	1.3 or 2.0 MP Color with Telecentric	1.3 MP Color	1.3 MP Color	1.3 MP Color Standard; 2 MP with Telecentric
Surface Ring Illumination	LED or Fiber Optic	LED	LED	LED or Fiber Optic	LED or Fiber Optic	LED
Transmitted Illumination	LED or Fiber Optic	LED	LED	LED or Fiber Optic	LED or Fiber Optic	LED
Coaxial Illumination - Optional	LED or Fiber Optic	LED	LED	LED or Fiber Optic	LED or Fiber Optic	LED
Auxiliary Lenses - Optional	0.5x, 1.5x, 2.0x	0.5x, 1.5x, 2.0x	0.5x, 1.5x, 2.0x	0.5x, 1.5x, 2.0x	0.5x, 1.5x, 2.0x	0.5x, 1.5x, 2.0x
Rotary Fixture	–	–	–	Optional	Optional	Optional
Renishaw Touch Probe	–	–	–	Optional	Optional	Optional
Renishaw Touch Probe Change Rack	–	–	–	–	–	–
Touch Probe Spotter Camera	–	–	–	–	–	–
Optimet Laser	–	–	–	–	–	–
Machine Pedestal and Point of Control Cart/Arm	–	–	–	–	Standard	–
Cabinet Stand	–	–	–	–	–	–
Workstation Base, Extension and Swing Arm	Optional	Optional	Optional	Optional	–	Optional
Part Fixturing	Optional	Optional	Optional	Optional	Optional	Optional
Dark Field Quadrant Illumination (LED only)	–	–	–	Optional	Optional	Optional
Video Pixel Calibration Standard	Optional	Optional	Optional	Optional	Optional	Optional
Calibration Standards	Optional	Optional	Optional	Optional	Optional	Optional
FOV, Linear and 2D Calibration Standards	Optional	Optional	Optional	Optional	Optional	Optional

AVR300	AV300+	AV350+	LF and LFM	HDV300	HDV400	HDV500
X	–	–	–	X	X	–
–	X	X	Standard	–	–	X
Vertical	Vertical	Vertical	Vertical	Horizontal	Horizontal	Horizontal
12 x 8 x 8"	12 x 6 x 8"	14 x 14 x 8"	18 x 12 x 8" 28 x 24 x 8" 38 x 30 x 8" Special Quote 50 x 36 x 8" Special Quote	12 x 6"	16 x 6"	20 x 8"
300 x 200 x 200mm	300 x 150 x 200mm	350 x 350 x 200mm	460 x 305 x 200mm 711 x 610 x 200mm 965 x 760 x 200mm Special Quote 1270 x 915 x 200mm Special Quote	300 x 150mm	400 x 150mm	500 x 200mm
Standard	Standard	Standard	Standard	–	–	–
Standard	Standard	Standard	Standard	Optional	Optional	Standard
E2 = 1.9µm + 5L/1000	E2 = 1.9µm + 5L/1000	E2 = 2.5µm + 5L/1000	E2 = 1.5 + 5L/1000 on LF and 2.5 + 5L/1000 on LFM	E1 = 3.0µm + L33	E1 = 3.0µm + L/33	E1 = 3.0µm + L/33
E1 = 2.5µm + 5L/1000	E1 = 2.5µm + 5L/1000	E1 = 2.5µm + 5L/1000	E1 = 2.5 + 5L/1000	–	–	–
0.1µm	0.1µm	0.1µm	0.1µm	0.5µm	0.5µm	0.5µm
–	Yes	Yes	X	–	–	–
Granite	Granite	Granite	Granite	Steel	Steel	Steel
M3	QC5300	QC5300	QC5300 or M3	M3	M3	M3
21.5" Touchscreen PC	24" Monitor	24" Monitor	24" Monitor	24" Touch Screen	24" Touch Screen	42" Monitor
6.5:1 - 2 LED 12:1 - 3 LED	12:1	12:1	12:1	–	–	–
–	–	–	6.5:1	6.5:1	6.5:1	-
–	–	–	–	Choice of 4.0x, 2.0x, 1.0x, 0.80x, 0.50x and 0.30x interchangeable Telecentric Lenses Optional- 0.14x fixed	Choice of 4.0x, 2.0x, 1.0x, 0.80x, 0.50x and 0.30x interchangeable Telecentric Lenses Optional- 0.14x fixed	Choice of 0.24x, 0.16x and 0.11x interchangeable Telecentric Lenses
1.3 MP Color Standard; 2 MP with Telecentric	1.3 MP Color	1.3 MP Color	1.3 MP Color	5 MP Color	5 MP Color	5 MP Black and White
LED or Fiber Optic	LED or Fiber Optic	LED or Fiber Optic	LED	LED	LED	LED
LED or Fiber Optic	LED or Fiber Optic	LED or Fiber Optic	LED	LED	LED	LED
LED or Fiber Optic	LED or Fiber Optic	LED or Fiber Optic	LED	–	–	–
0.5x, 1.5x, 2.0x	0.5x, 1.5x, 2.0x	0.5x, 1.5x, 2.0x	0.5x, 1.5X, 2.0x	–	–	–
Optional	Optional	Optional	Optional	–	–	–
Optional	Optional	Optional	Optional	–	–	–
–	Optional	Optional	Optional	–	–	–
–	–	–	Optional	–	–	–
–	Optional	Optional	Optional	–	–	–
–	Standard	Standard	Standard	–	–	–
–	–	–	–	Optional	Optional	–
Optional	–	–	–	–	–	–
Optional	Optional	Optional	Optional	Optional	Optional	Optional
Optional	Optional	Optional	Optional	–	–	–
Optional	Standard	Standard	Standard	Optional	Optional	Optional
Optional	Optional	Optional	Optional	Optional	Optional	Optional
Optional	Optional	Optional	Optional	Optional	Optional	Optional

Accessories

Fiber-optic and LED Illumination

Rotary part positioner with collet kit

Modular system work stands

Part Holding Fixtures

Touch Probe Kits

NIST Traceable Calibration Standards

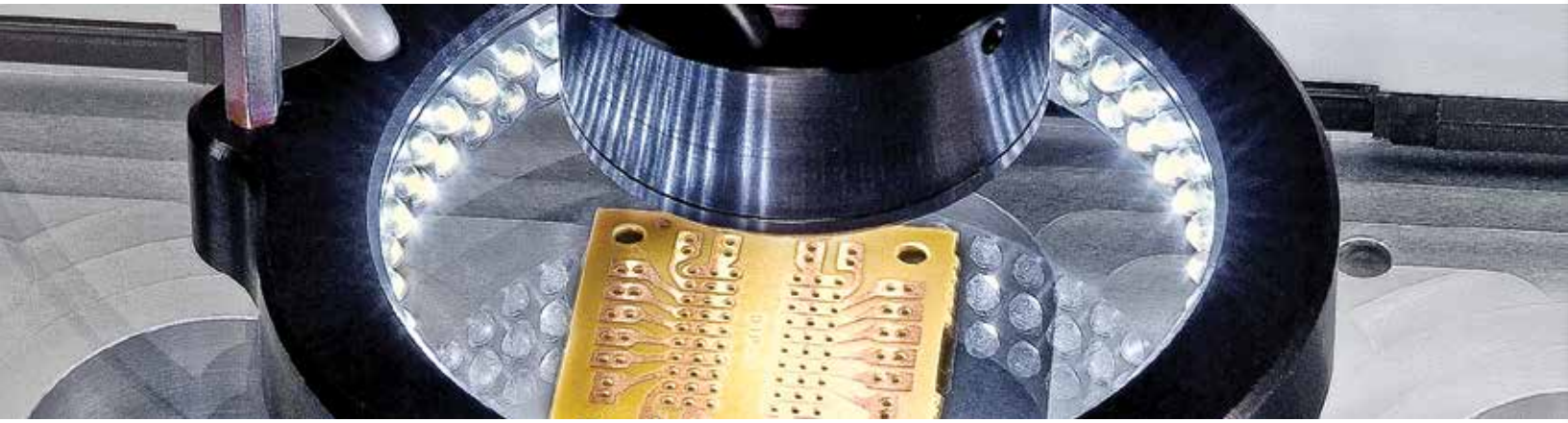

VIDEO INSPECTION SYSTEMS

Video Inspection Systems

KineMic™

KMR

KineMic™ video microscopes are a family of seven versatile and affordable inspection and vision metrology systems. They are ideal for receiving inspection, quality assurance, training, manufacturing, assembly, research, and documentation – wherever easy setup and a range of magnifications are required. Depending on the size of the parts to be measured, measurements can be all electronic within the field of view, or be integrated with stage motion for parts up to 8" (200mm).

Features

- XGA models set the standard for quick setup and ease of use by not requiring a computer
- D1 and M3 models offer the power of a 24" color touch-screen monitor and PC with MetLogix™ inspection and metrology software
- LED surface and transmitted illumination
- Small footprint takes up minimal space

KMR-200 with M3

Our KMR systems line provide high performance for low cost. These machines are simple to operate without compromising performance.

With seven models to choose from, we can customize to your specific needs.

Call (949) 348-1213 for an exact quote.

KMR-FOV-M3-0.14x

	KineMic XGA Zoom, Basic	KineMic XGA Zoom, 2 x 2 Stage	KineMic D1 Zoom	KineMic D1 Zoom, 2 x 2 Stage	KineMic M3 Zoom, FOV	KineMic M3 Telecentric, FOV	KineMic M3 Zoom, 4 x 8 Stage
Part Number	KMR-XGA	KMR-50-XGA	KMR-D1	KMR-50-D1	KMR-Zoom-M3	KMR-FOV-M3	KMR-200-M3
Optics	6.5:1 zoom	6.5:1 zoom	6.5:1 zoom	6.5:1 zoom	6.5:1 zoom	7 telecentric lenses	6.5:1 zoom
CCD Sensor	0.83 MPixel	0.83 MPixel	1.33 MPixel	1.33 MPixel	1.33 MPixel	2.02 MPixel	1.33 MPixel
Camera Interface	VGA cable	VGA cable	USB cable	USB cable	USB cable	USB cable	USB cable
Computer	N/A	N/A	PC	PC	PC	PC	PC
Software	N/A	N/A	MetLogix™ D1	MetLogix™ D1	MetLogix™ M3	MetLogix™ M3	MetLogix™ M3
Video Screen	19" XGA monitor	19" XGA monitor	24" touch-screen monitor with PC	24" touch-screen monitor with PC	24" touch-screen monitor with PC	24" touch-screen monitor with PC	24" touch-screen monitor with PC
Screen Resolution	1024 x 768	1024 x 768	1920 x 1080	1920 x 1080	1920 x 1080	1920 x 1080	1920 x 1080
Lens Magnification	0.7x to 4.5x zoom	0.7x to 4.5x zoom	0.7x to 4.5x zoom	0.7x to 4.5x zoom	0.7x to 4.5x zoom	Telecentric Lenses: Choice of 0.14x, 0.3x, 0.5x, 0.8x, 1.0x and 4.0x magnifications	0.7x to 4.5x zoom
Screen Magnification	31x to 200x	31x to 200x	31x to 200x	31x to 200x	31x to 200x	13x to 178x	31x to 200x
Auxiliary lenses	0.5x, 0.75x, 1.5x, 2x	0.5x, 0.75x, 1.5x, 2x	0.5x, 0.75x, 1.5x, 2x	0.5x, 0.75x, 1.5x, 2x	0.5x, 0.75x, 1.5x, 2x	N/A	0.5x, 0.75x, 1.5x, 2x
Field of view (X-axis)	1.4 to 9.0mm	1.4 to 9.0mm	1.4 to 9.0mm	1.4 to 9.0mm	1.4 to 9.0mm	1.8 to 24mm	1.4 to 9.0mm
X-Y Stage Motion	None	50 x 50 mm	None	50 x 50 mm	None	None	200 x 100 mm
Metrology Means	None	Micrometers	D1 software**	D1 software**	M3 FOV software	M3 FOV software	X and Y encoders
Measurement Resolution	N/A	1µm (.00005")	Up to 2µm*	1µm (.00005")	Up to 2µm*	Up to 2µm*	0.5µm (0.00002")
Meas. Accuracy	N/A	3µm per 25mm	Up to ±2.5µm*	3µm per 25mm	Up to ±2.5µm*	Up to ±2.5µm*	2.5µm + 5L/1000
Basic Stand	Standard	Standard	Standard	Standard	Standard	Standard	Standard
Boom Stand	Optional	N/A	Optional	N/A	Optional	N/A	N/A
LED Back Light	Standard	Standard	Standard	Standard	Standard	Standard	Standard
LED Ring Light	Standard	Standard	Standard	Standard	Standard	Standard	Standard
Lighting Control	Adjustment knobs	Adjustment knobs	Adjustment knobs	Adjustment knobs	Via M3 software	Via M3 software	Via M3 software

* These are best values. Actual values will depend on the zoom lens setting or selected telecentric lens.
**D1 software basic measurements are taken by manually positioning a cross-hair on the screen.
Disclaimer: Due to continual product improvements, specifications may change without notice.

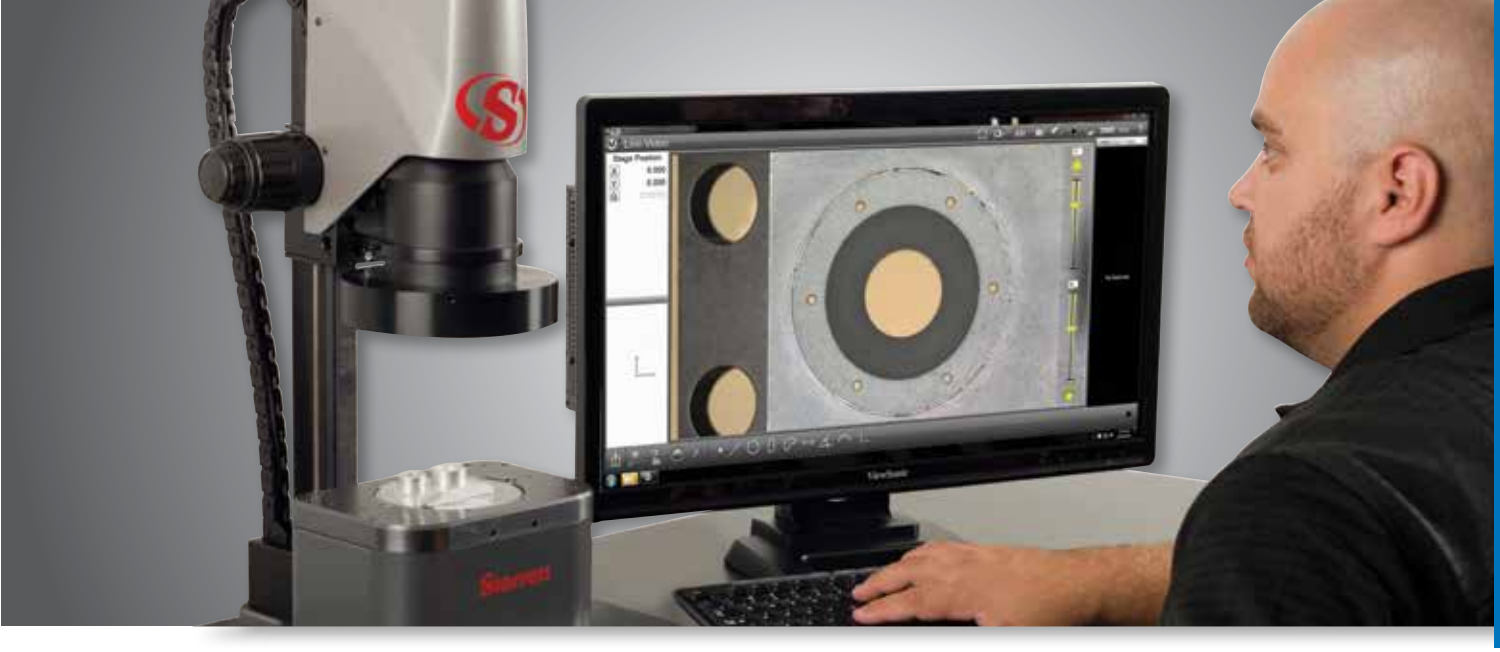

KMR 50-D1

KMR-XGA

KMR-D1

KMR-FOV with M3

	KineMic XGA Zoom, Basic	KineMic XGA Zoom, 2 x 2 Stage	KineMic D1 Zoom	KineMic D1 Zoom, 2 x 2 Stage	KineMic M3 Zoom, FOV	KineMic M3 Telecentric, FOV	KineMic M3 Zoom, 4 x 8 Stage
Model Number	KMR-XGA	KMR-50-XGA	KMR-D1	KMR-50-D1	KMR-Zoom-M3	KMR-FOV-M3	KMR-200-M3
Video Inspection	Yes	Yes	Yes	Yes	Yes	Yes	Yes
Basic Dimensions	No	Manual LCD Micrometer	Yes - Manual	Manual LCD Micrometer	VED - FOV measurement	VED - FOV measurement	VED - FOV measurement
Geometric Constructs	No	No	No	No	Yes	Yes	Yes
Image Annotation	No	No	Yes	Yes	Yes	Yes	Yes
Image Archiving	No	No	Yes	Yes	Yes	Yes	Yes
Video Edge Detection	No	No	No	No	Yes	Yes	Yes

PRECISION MAKES THE DIFFERENCE

PURE PRECISION.

The combined powerful features of the Starrett MVR and AVR Vision Systems provide a multi-functional measurement and inspection system that will serve you for years to come.

Starrett®

(978) 249-3551 • starrett.com

Follow us!

OPTICAL COMPARATORS

Horizontal Bench-Top Optical Comparator

HE400

The most economical of our bench top comparators, the HE400 offers a 16" (400mm) diameter screen, X-Y stage travel, choice of six bayonet-style fixed interchangeable lenses and Q-axis angular readout: all to improve capability and performance. These latest horizontal comparators are fitted with either MetLogix™ M1 or M2 measuring software or Quadra-Chek® digital readout systems as standard, making them simple to use, but having the power to satisfy the most complex measuring requirements.

OPERATOR INTERFACE

	MetLogix™		Quadra-Chek®	
Feature	M1	M2	QC121	QC221
Mounted to comparator arm	x	x	x	x
Color graphics	x	x		
Touch screen operation	x	x		
MS Windows® operating system	x	x		
X-Y-Q axis digital readout	x	x	x	x
2D geometry software with skew	x	x	x	x
Optical edge detection option	x	x	x	x
Software developer	MetLogix™	MetLogix™	Metronics/Heidenhain	Metronics/Heidenhain

HE400

SPECIFICATIONS

HE400	
Horizontal Travel	10" (250mm)
Vertical Travel	4" (100mm)
Focus Travel	1-1/8" (28mm)
Top Plate*	18.75 x 4.7" (480 x 120mm)
Image	Inverted and reversed

*With machined single slot for easy fixturing

Features and Specifications

- All metal construction
- Single bayonet-style lens mounting system
- Collimating condenser with yellow/green filter and provision to mount further accessories
- Linear encoder (glass scale) with .5µm on both X and Y axes
- LED profile and surface illumination
- Fully retractable flexible duplex fiber optic surface illumination
- Digital protractor for accurate angle measurement 1' resolution
- Available with MetLogix™ M1 tablet, M2 PC-based touch screen measuring software or Quadra-Chek® digital readout system
- 15.4lb (7kg) load capacity
- 18.75 x 4.74" (480 x 120mm) precision workstage top plate with machined slot for easy fixturing
- 10 x 4" (254 x 100mm) of XY stage travel
- 1-1/8" (8mm) focus travel
- Fine adjustment on all axes
- Quick release mechanism on the X-axis

Options

- Six interchangeable fixed magnification lenses including 10x, 20x, 25x, 31.25x, 50x and 100x
- Automatic fiber optic edge detection
- Canopy and curtains (designed to mount on Starrett cabinet stand
- Purpose built cabinet stand
- Extensive line of accessories

HE400 Dimensions

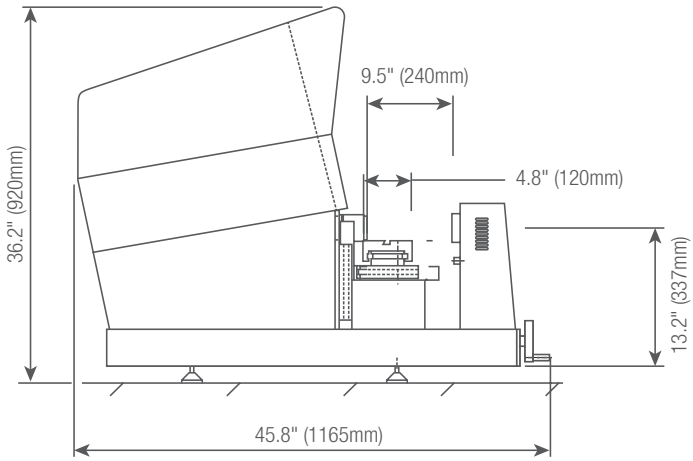

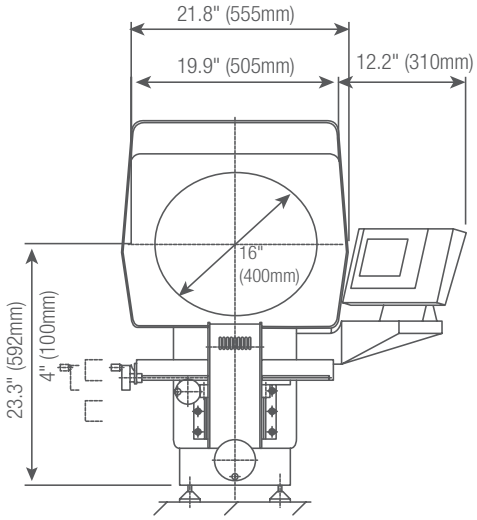

WEIGHT AND DIMENSIONS

	HE400
Net Weight	230lbs 105kg
Shipping Weight	300lbs 135kg
Shipping Dimensions	49" (L) x 32" (W) x 51" (H)

Horizontal Bench-Top Optical Comparator

HB400

The HB400 Optical Comparator provides exceptional performance with a 16" (400mm) diameter viewing screen and 110lbs workstage load capacity. Available with optical and/or video edge detection which removes operator subjectivity in locating edges of parts being measured. A bayonet style lens mounting system accepts a choice of six fixed interchangeable lenses as well as the OV2 Zoom or TOV2 fixed telecentric magnification video camera systems. Motorized stage, fully automatic CNC controls and swing-away lamp house are all optional features. This comparator provides performance previously only available with floor standing models.

OPERATOR INTERFACE

	MetLogix™			Quadra-Chek®		
Feature	M1	M2	M3	QC121	QC221	QC5200
Mounted to comparator arm	x	x		x	x	
Color graphics	x	x	x			
Touch screen operation	x	x	x			
Operating system	Android	Windows	Windows			
X-Y-Q axis digital readout	x	x	x	x	x	x
2D geometry software with skew	x	x	x	x	x	x
Optical edge detection option	x	x	x	x	x	x
Video edge detection option			x			x
CAD file import and export option			x			x
CNC drive option		x	x		x	x
Software developer	MetLogix™	MetLogix™	MetLogix™	Metronics/Heidenhain	Metronics/Heidenhain	Metronics/Heidenhain

HB400

SPECIFICATIONS

HB400	
Horizontal Travel	12" (300mm)
Vertical Travel	6" (150mm)
Focus Travel	2" (50mm)
Top Plate*	21 x 5" (530 x 120mm)
Image	Erect and reversed

*With machined slots for easy fixturing

Features and Specifications

- All metal construction with hard-anodized stage tooling plate
- Single bayonet-style lens mounting system
- Collimating condenser with yellow/green filter and provision to mount further accessories
- Linear encoder (glass scale) on both X and Y axes
- LED profile and surface illumination
- Fixed duplex fiber optic surface illumination
- Digital protractor for accurate angle measurement (1' resolution) via Q-axis readout
- Available with MetLogix™ M1 tablet, M2 or M3 measuring software touch-screen and PC, or Quadra-Chek® digital readout system
- Fine adjustment on all axes
- Quick release mechanism on the X-axis

Options

- Six interchangeable fixed magnification lenses including 10x, 20x, 25x, 31.25x, 50x and 100x
- Optional 5x fixed or interchangeable lens system available by special order
- Optional extended travel workstage 16" (400mm)
- Automatic optical edge detection
- Automatic video edge detection (available only with OV2 or TOV2 video cameras)
- OV2 Video Camera with 6.5:1 zoom lens
- TOV2 Telecentric Video Camera with choice of 0.16x, 0.3x or 0.5x fixed magnification lens
- Motorized X and Y axes
- Fully automatic CNC controls
- Swing-away lamp house
- Canopy and curtains (designed to mount on Starrett cabinet stand)
- Purpose built cabinet stand
- Extensive line of accessories

HB400 Dimensions

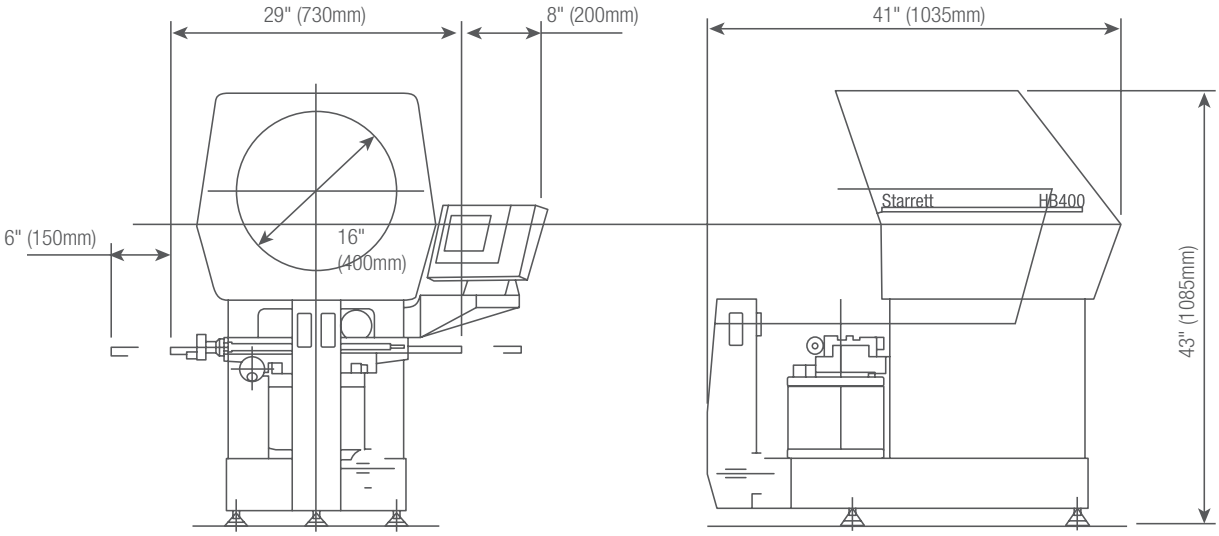

WEIGHT AND DIMENSIONS

	HB400
Net Weight	320lbs 145kg
Shipping Weight	385lbs 175kg
Shipping Dimensions	49" (L) x 32" (W) x 51" (H)

Horizontal Bench-Top Optical Comparator

HD400

DUAL LENS

The HD400 is a dual lens optical comparator offering a two-lens mount allowing instant switching between two magnifications lenses or video camera adaptor. The HD400 is equipped with a 16" (400mm) travel workstage as standard. Optional automatic edge detection or video edge detection removes operator subjectivity in locating edges of parts being measured. A bayonet style lens mounting system accepts a choice of six interchangeable lenses as well as our OV2 Zoom or TOV2 fixed telecentric magnification video camera systems. Motorized stage, fully automatic CNC controls and swing-away lamp house are all optional features.

OPERATOR INTERFACE

	MetLogix™			Quadra-Chek®	
Feature	M1	M2	M3	QC221	QC5200
Mounted to comparator arm	x	x		x	
Color graphics	x	x	x		
Touch screen operation	x	x	x		
Operating system	Android	Windows®	Windows®		
X-Y-Q axis digital readout	x	x	x	x	x
2D geometry software with skew	x	x	x	x	x
Optical edge detection option	x	x	x	x	x
Video edge detection option			x		x
CAD file import and export option			x		x
CNC drive option		x	x	x	x
Software developer	MetLogix™	MetLogix™	MetLogix™	Metronics/Heidenhain	Metronics/Heidenhain

HD400

SPECIFICATIONS

HD400	
Horizontal Travel	16" (400mm)
Vertical Travel	6" (150mm)
Focus Travel	2" (50mm)
Top Plate*	21 x 5" (530 x 120mm)
Image	Erect and reversed

*With machined slots for easy fixturing

Features and Specifications

- All metal construction with hard-anodized stage tooling plate
- 16" (400mm) diameter screen
- Dual-lens mounting system
- Collimating condenser with yellow/green filter and provision to mount further accessories
- Linear encoder (glass scale) on both X and Y axes
- LED profile and surface illumination
- Fully retractable flexible duplex fiber optic surface illumination
- Digital protractor for accurate angle measurements (1' resolution) via Q-axis readout
- Helix adjustment for accurate thread form inspection
- Available with MetLogix™ M1 tablet, M2 or M3 PC-based touch screen measuring software or Quadra-Chek® digital readout system
- Fine adjustment on all axes
- Quick release mechanism on the X-axis

Options

- Six interchangeable fixed magnification lenses including 10x, 20x, 25x, 31.25x, 50x and 100x
- Optional 5x fixed lens system available by special order
- Automatic optical edge detection
- Automatic video edge detection (available only with OV2 or TOV2 video cameras)
- OV2 Video Camera with 6.5:1 zoom lens
- TOV2 Telecentric Video Camera with choice of 0.16x, 0.3x, or 0.5x fixed magnification lens
- Motorized X and Y axes
- Fully automatic CNC controls
- Swing-away lamp house
- Canopy and curtains (designed to mount on Starrett cabinet stand)
- Purpose built cabinet stand
- Extensive line of accessories

HD400 Dimensions

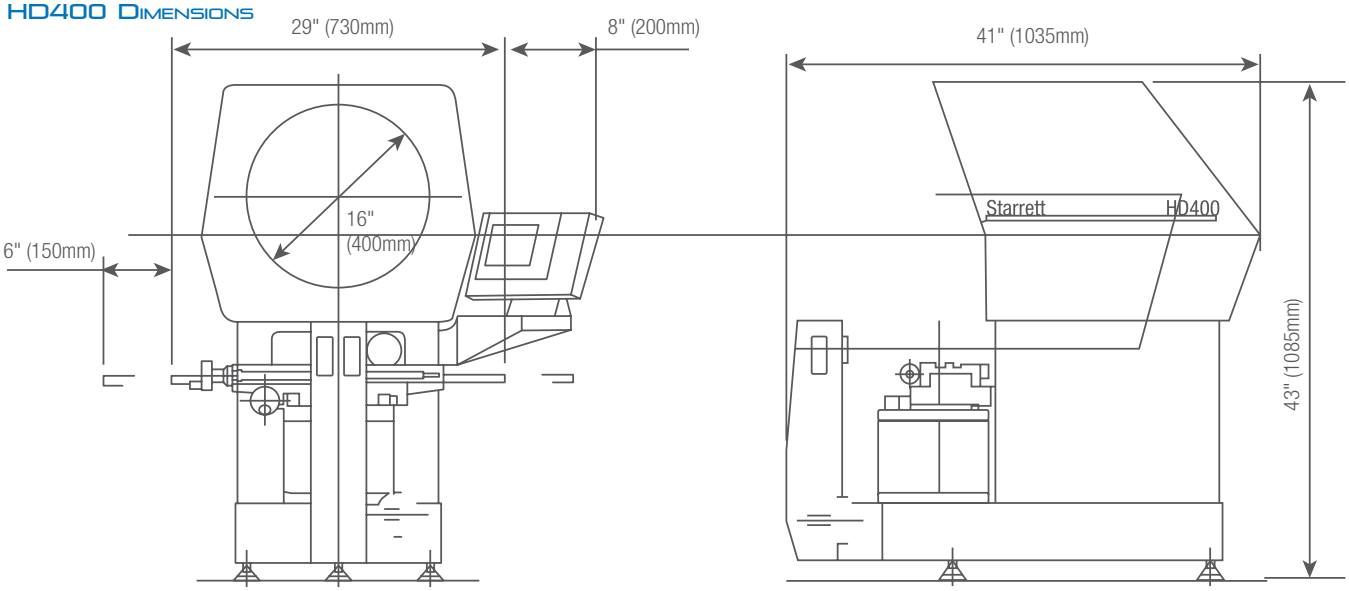

WEIGHT AND DIMENSIONS

	HD400
Net Weight	320lbs 145kg
Shipping Weight	385lbs 175kg
Shipping Dimensions	49" (L) x 32" (W) x 51" (H)

NEW!

Vertical Bench-Top Optical Comparator

VB300

The VB300 is another optical comparator with the Starrett trademark formula: high performance at a low cost. This verticle bench top comparator is designed to meet the demands of modern industry and is ideal for the rapid inspection of small light-weight components, stampings, plastic molding, electronic components, small turned parts and more. The VB300 features a variety of digital displays making the VB300 easy to use and have the power to satisfy the most complex of measuring requirements.

OPERATOR INTERFACE

Feature	Integral LED readout	MetLogix™ M1	M2	Quadra-Chek® QC121	QC221
Angular digital measurement in readout	x				
Mounted to comparator arm		x	x	x	x
Color graphics		x	x		
Touch screen operation		x	x		
Operating system		Android	Windows®		
X-Y-Q axis digital readout	x	x	x	x	x
2D geometry software with skew		x	x	x	x
Optical edge detection option		x	x	x	x
Software developer		MetLogix™	MetLogix™	Metronics/Heidenhain	Metronics/Heidenhain

VB300

SPECIFICATIONS

VB300	
Horizontal Travel	4" (100mm)
Vertical Travel	4" (100mm)
Focus Travel	3.5" (90mm)
Top Plate*	9 x 9" (225 x 225mm)
Glass Insert	6 x 6" (150 x 150mm)
Image	Reversed

*With machined slot for easy fixturing

Features and Specifications

- All metal construction for optimum performance
- 12" (300mm) diameter screen with overlay clips
- Linear encoder (glass scale) on both X and Y axes
- Stage weight capacity: 11lbs (5kg) (evenly distributed)
- LED profile and surface illumination
- Screen driven Q-axis
- Quick release mechanism on X-axis and Y-axis
- Available with a simple integrated LED readout display or choice of the new MetLogix™ M1 tablet, M2 PC-based measuring software, or Quadra-Chek® digital readout systems

Options

- Choice of four fixed magnification lenses including 10x, 20x, 25x and 50x
- Purpose built cabinet stand
- Precision Centers and Vees accessory available

VB300 Dimensions

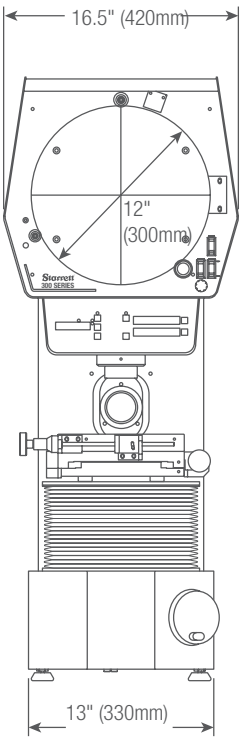

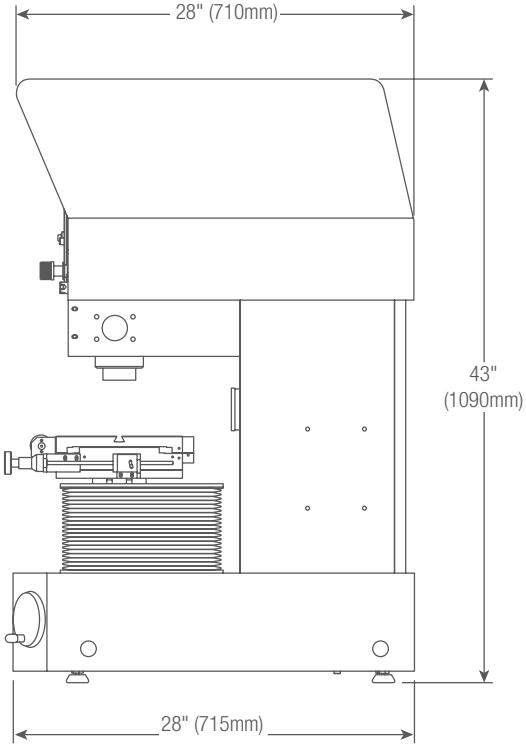

WEIGHT AND DIMENSIONS

	VB300
Net Weight	423lbs 192kg
Shipping Weight	443lbs 201kg
Gross Dimensions (L x W x H)	44 x 33 x 52"

Vertical Bench-Top Optical Comparator

VB400

The VB400 Vertical Optical Comparator allows flat parts to be simply laid on a glass insert in the workstage. Features include a 16" (400mm) diameter vertical screen, ultra-bright LED profile and surface illumination, and linear encoder scales for 0.5µm resolution.

OPERATOR INTERFACE

Feature	MetLogix™ M1	MetLogix™ M2	Quadra-Chek® QC121	Quadra-Chek® QC221
Mounted to comparator arm	x	x	x	x
Color graphics	x	x		
Touch screen operation	x	x		
Operating system	Anroid	Windows®		
X-Y-Q axis digital readout	x	x	x	x
2D geometry software with skew	x	x	x	x
Optical edge detection option	x	x	x	x
Software developer	MetLogix™	MetLogix™	Metronics/Heidenhain	Metronics/Heidenhain

VB400

SPECIFICATIONS

VB400	
Horizontal Travel	8" (200mm)
Vertical Travel	4" (100mm)
Focus Travel	4" (100mm)
Top Plate*	16 x 9" (400 x 230mm)
Glass Insert	9-1/4 x 5-1/2" (235 x 140mm)
Image	Reversed

*With machined slot for easy fixturing

Features and Specifications

- All metal construction
- 16" (400mm) diameter screen
- Collimating condenser with yellow/green filter and provision to mount further accessories
- Linear encoder (glass scale) on both X and Y axes
- LED profile and surface illumination
- Digital protractor for accurate angle measurements (1' resolution) via Q-axis readout
- Available with MetLogix™ M1 tablet, M2 PC-based touch screen measuring software or Quadra-Chek® digital readout system
- Fine adjustment on all axes
- Quick release mechanism on the X-axis

Options

- Choice of six fixed magnification lenses including 10x, 20x, 25x, 31.25X, 50x and 100x
- Canopy and curtains (designed to mount on Starrett cabinet stand)
- Purpose built cabinet stand
- Work holding accessories

VB400 Dimensions

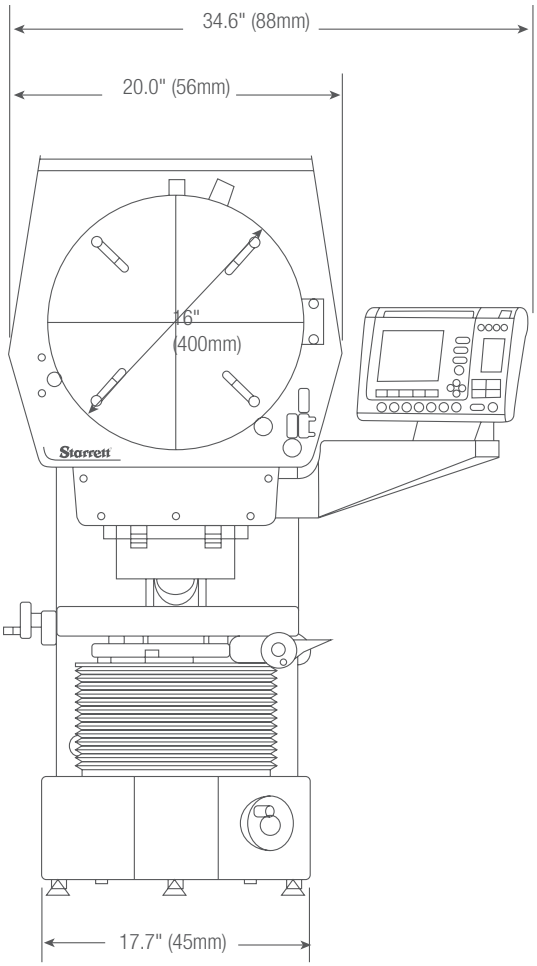

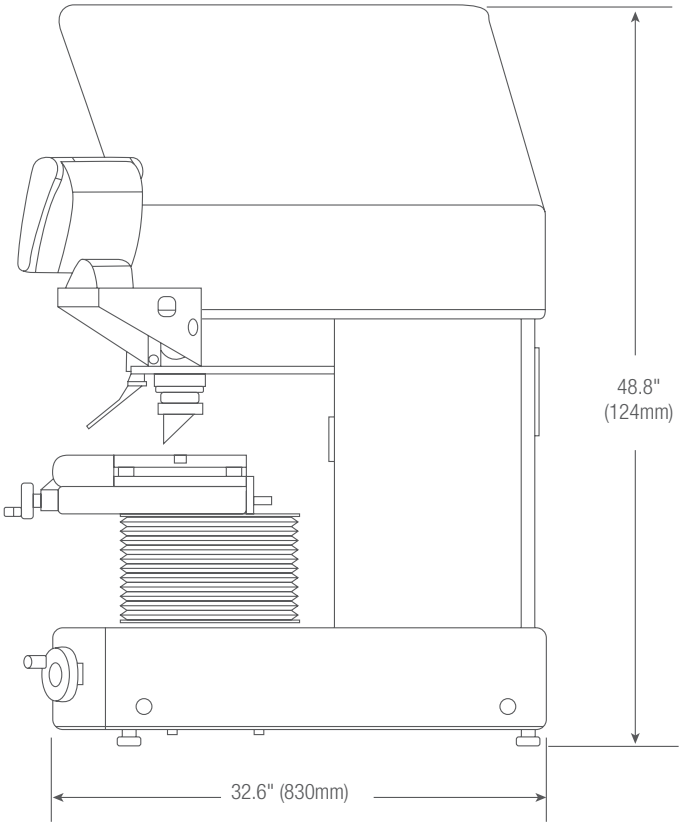

WEIGHT AND DIMENSIONS

	VB400
Net Weight	423lbs 192kg
Shipping Weight	443lbs 201kg
Shipping Dimensions (L x W x H)	49 x 32 x 51"

Vertical Floor Standing Optical Comparator

VF600

If your measuring requirements demand the use of a large screen vertical axis comparator, then look no further than the VF600. Ideal for the larger components found in the electronics, stamping, and extrusion industries, the VF600 is the ultimate in vertical axis optical comparators; a design based on years of knowledge in the manufacture of high performing optical comparators.

OPERATOR INTERFACE

Feature	MetLogix™ M2	Quadra-Chek® QC221
Mounted to comparator arm	x	x
Color graphics	x	
Touch screen operation	x	
Operating system	Windows®	
X-Y-Q axis digital readout	x	x
2D geometry software with skew	x	x
Optical edge detection option	x	x
Software developer	MetLogix™	Metronics/Heidenhain

VF600

SPECIFICATIONS

VF600	
Horizontal Travel	8" (200mm)
Vertical Travel	4" (100mm)
Focus Travel	4" (100mm)
Top Plate*	16 x 9" (400 x 230mm)
Glass Insert	9-1/4 x 5-1/2" (235 x 140mm)
Image	Inverted and reversed

*With machined slots for easy fixturing

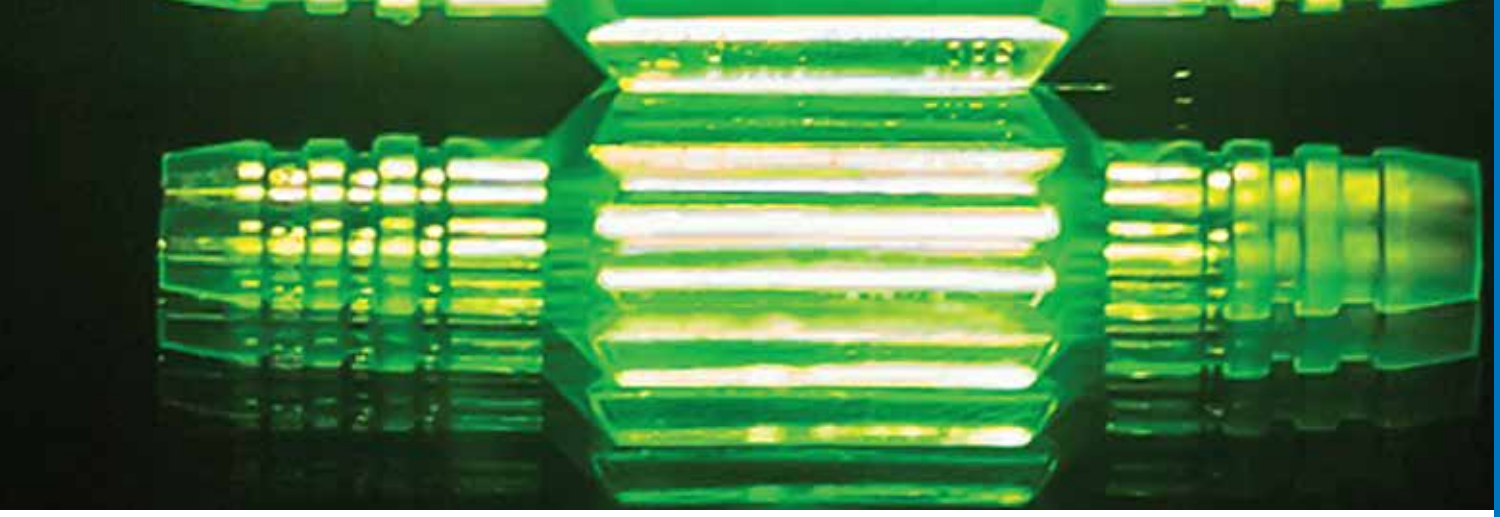

Features and Specifications

- Available with MetLogix™ M1 tablet, M2 measuring software with touch-screen with PC, or Quadra-Chek® digital readout system
- Screen is angled 30° from horizontal for clear, easy viewing
- Projection lens turret with three lens capacity (lenses not included)
- Turret mounted condenser system complete with two lenses and yellow/green filter with provision to mount further accessories
- Full canopy and curtains
- Linear encoder (glass scale) on both X and Y axes

Options

- Choice of five fixed magnification lenses including 10x, 20x, 25x, 50x and 100x
- 5x fixed lens by special order
- Automatic edge detection
- Motorized X-Y axis
- Fully automatic CNC controls

VF600 Dimensions

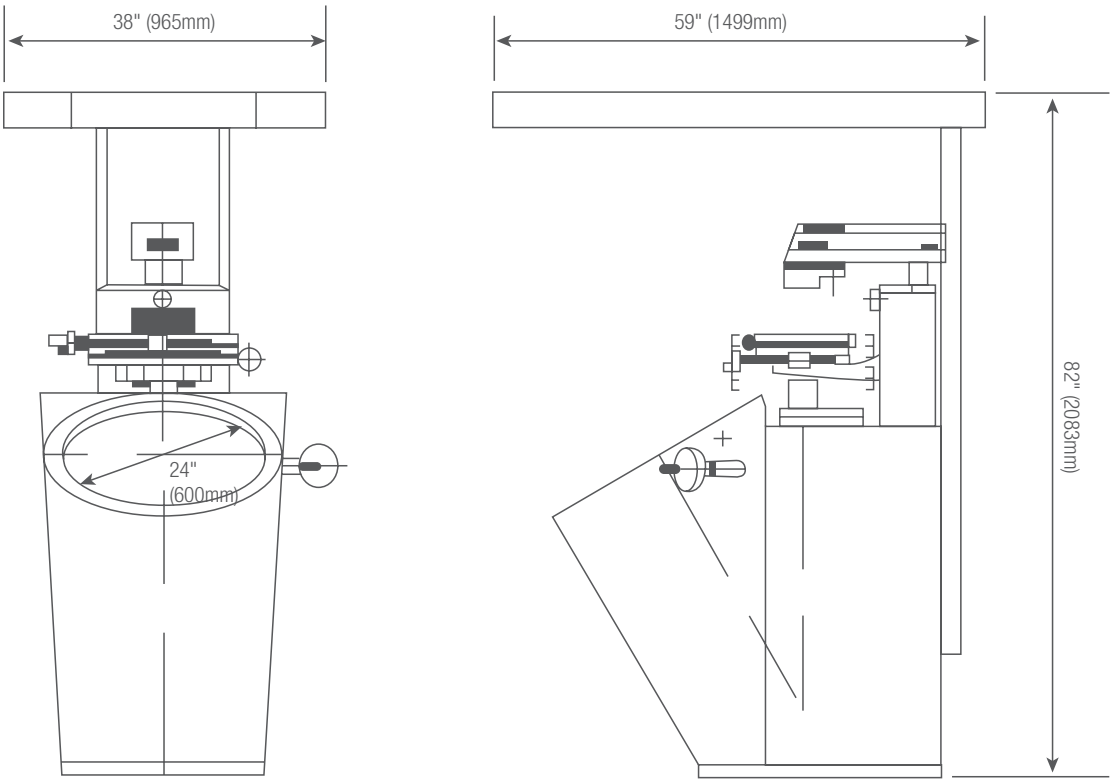

WEIGHT AND DIMENSIONS

	VF600
Net Weight	507lbs 230kg
Shipping Weight	937lbs 425kg
Shipping Dimensions	60 x 47 x 81" 152 x 120 x 206cm

Horizontal Floor Standing Optical Comparator

HF600

Well known throughout the world for superior value and exceptional measuring performance across the full measuring range and at all magnifications, the HF600 sets the standard in all applications from the QC lab to the production floor. The HF600 comparator has a four-position lens turret for instant selection of optional magnification lenses. Inserting the optional OV2 or TOV2 Video Camera System converts the comparator into a video metrology system. Ideal for use over a broad spectrum of industries and applications, the HF600 is designed and built to satisfy the requirements of measuring small to large work pieces with total precision, ruggedness, and efficiency. The HF600 utilizes 2D measurement software for geometries like diameters, radius, angles, lines, points, and for skew correction. Advanced software can also provide many tools such as CAD file import, CAD data export for reverse engineering, standard and custom reports, and Ethernet networking.

OPERATOR INTERFACE

Feature	MetLogix™ M2	M3	Quadra-Chek® QC221	QC5200*
Mounted to comparator arm	x		x	
Color graphics	x	x		x
Touch screen operation	x	x		
Operating system	Windows®	Windows®		
X-Y-Q axis digital readout	x	x	x	x
2D geometry software with skew	x	x	x	x
Optical edge detection option	x	x	x	x
Video edge detection option		x		x
CAD file import and export option		x		x
CNC drive option	x	x	x	x
Software developer	MetLogix™	MetLogix™	Metronics/Heidenhain	Metronics/Heidenhain

*Available with either optical edge detection or video edge detection

HF600

SPECIFICATIONS

HF600	
Horizontal Travel	12" (300mm)
Vertical Travel	8" (200mm)
Focus Travel	3" (75mm)
Top Plate*	25 x 9" (635 x 230mm)
Image	Erect and reversed

*With machined slots for easy fixturing

Starrett®

Features and Specifications

- All metal construction with nickel plated stage tooling plate
- 24" (600mm) diameter screen with precision cross lines and overlay clips
- Motorized X and Y axes standard
- Two-axis power drive via joystick and variable speed control for fine adjustment
- Projection lens turret with four lens capacity (lenses not included)
- Turret mounted condenser system and yellow/green filter and provision to mount further accessories
- Stage Weight Capacity: 330lbs (150kg) (evenly distributed)
- Workstage capacity between centers: 17.5" (440mm)
- Fully retractable duplex fiber optic surface illumination
- 0.001mm resolution Heidenhain linear scales
- Screen driven rotary Q-axis wtih 1' resolution
- Available with MetLogix™ M1 tablet, M2 or M3 measuring software with touch screen and PC, or Quadra-Chek® digital readout systems
- Complete with full canopy and curtains

Options

- Six interchangeable lens magnification including 10x, 20x, 25x, 31.25x, 50x and 100x
- Optional 5x fixed or 5x interchangeable on a 3-lens turret available by special order
- Interchangeable OV2 video camera system with a 6.5:1 zoom lens
- Interchangeable TOV2 telecentric video camera systems with choice of 0.16x, 0.3x or 0.5x fixed magnification lenses
- Extended Stage Travel: 20" (500mm) X-axis; 8" (200mm) Y-axis
- Fully automatic CNC controls
- Automatic Optical Edge Detection
- Automatic Video Edge Detection available only with OV2 and TOV2 video camera systems
- Swing-away lamp house
- Extensive line of accessories

HF600 Dimensions

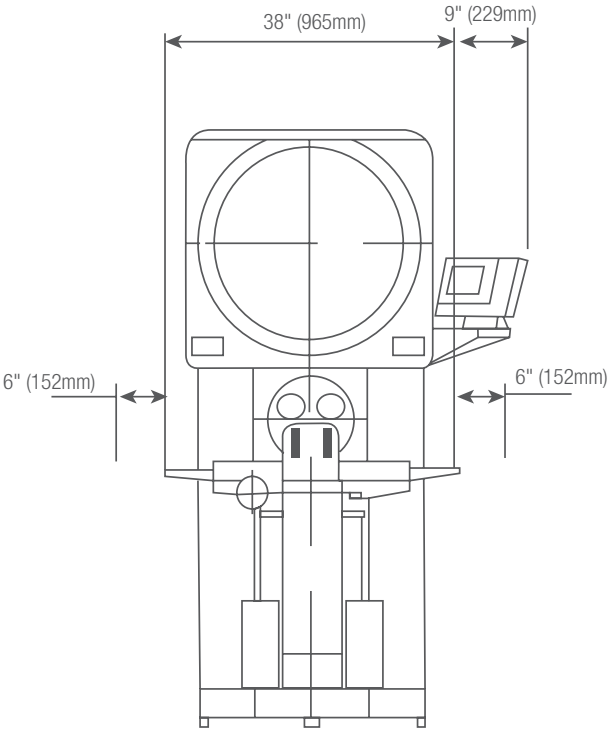

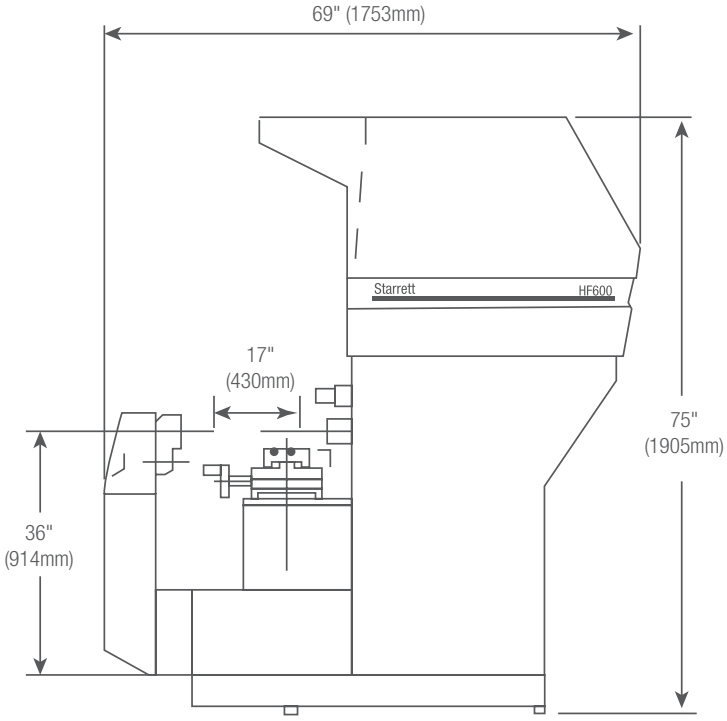

WEIGHT AND DIMENSIONS

	HF600
Net Weight	1340lbs 610kg
Shipping Weight	1500lbs 680kg
Crated Dimensions	81 x 49 x 89" 206 x 125 x 226cm

Horizontal Floor Standing Optical Comparator

HF750

Utilizing the same exemplary build standards as the HF600, the HF750 super capacity optical comparator delivers benefits from an even larger 30" (762mm) screen, setting a new standard for clarity and brightness. Ideal for use over a broad spectrum of industries and applications, the HF750 is designed and built to satisfy the requirements of measuring small to large work pieces with total precision, ruggedness, and efficiency. The geometric software measures diameter, radius, angle, line and point features, plus part skewing for faster setup. The HF750 is available with optical edge detection or video edge detection with advanced software and OV2 or TOV2 video camera options.

OPERATOR INTERFACE

Feature	MetLogix™ M2	M3	Quadra-Chek® QC221	QC5200*
Mounted to comparator arm	x		x	
Color graphics	x	x		x
Touch screen operation	x	x		
Operating system	Windows®	Windows®		
X-Y-Q axis digital readout	x	x	x	x
2D geometry software with skew	x	x	x	x
Optical edge detection option	x	x	x	x
Video edge detection option		x		x
CAD file import and export option		x		x
CNC drive option	x	x	x	x
Software developer	MetLogix™	MetLogix™	Metronics/Heidenhain	Metronics/Heidenhain

*Available with either optical edge detection or video edge detection

HF750

SPECIFICATIONS

HF750	
Horizontal Travel	12" (300mm)
Vertical Travel	8" (200mm)
Focus Travel	3" (75mm)
Top Plate*	25 x 9" (635 x 230mm)
Image	Erect and reversed

*With machined slots for easy fixturing

Features and Specifications

- All metal construction with nickel plated stage tooling plate
- 30" (762mm) diameter screen wtih precision cross lines and overlay clips
- Motorized X and Y axes standard
- Two-axis power drive via joystick and variable speed control for fine adjust
- Projection lens turrent with three lens capacity (lenses not included)
- Turret mounted condenser system and yellow/green filter and provision to mount further accessories
- Stage Weight Capacity: 330lbs (150kg) (evenly distributed)
- Workstage capacity between centers 17.5" (440mm)
- Fully retractable duplex fiber optic surface illumination
- Halogen profile and surface illumination
- 0.001mm resolution Heidenhain linear scales
- Screen driven rotary Q-axis with 1' resolution
- Available with MetLogix™ tablet, M2 measuring software with touch screen and PC, or Quadra-Chek® digital readout systems
- Complete with full canopy and curtains

Options

- Six interchangeable lens magnifications including 10x, 20x, 25x, 31.25x, 50x and 100x
- Optional 5x fixed or 5x interchangeable on a 3-lens turret available by special order
- Interchangeable OV2 video camera system with 6.5:1 zoom lens
- Interchangeable TOV2 telecentric video camera systems with choice of 0.16x, 0.3x or 0.5x fixed magnification lenses
- Extended Stage Travel: 20" (500mm) X-axis; 8" (200mm) Y-axis
- Fully automatic CNC controls
- Automatic Optical Edge Detection
- Automatic Video Edge Detection available only wtih OV2 and TOV2 video camera systems
- Swing-away lamp house
- Extensive line of accessories

HF750 Dimensions

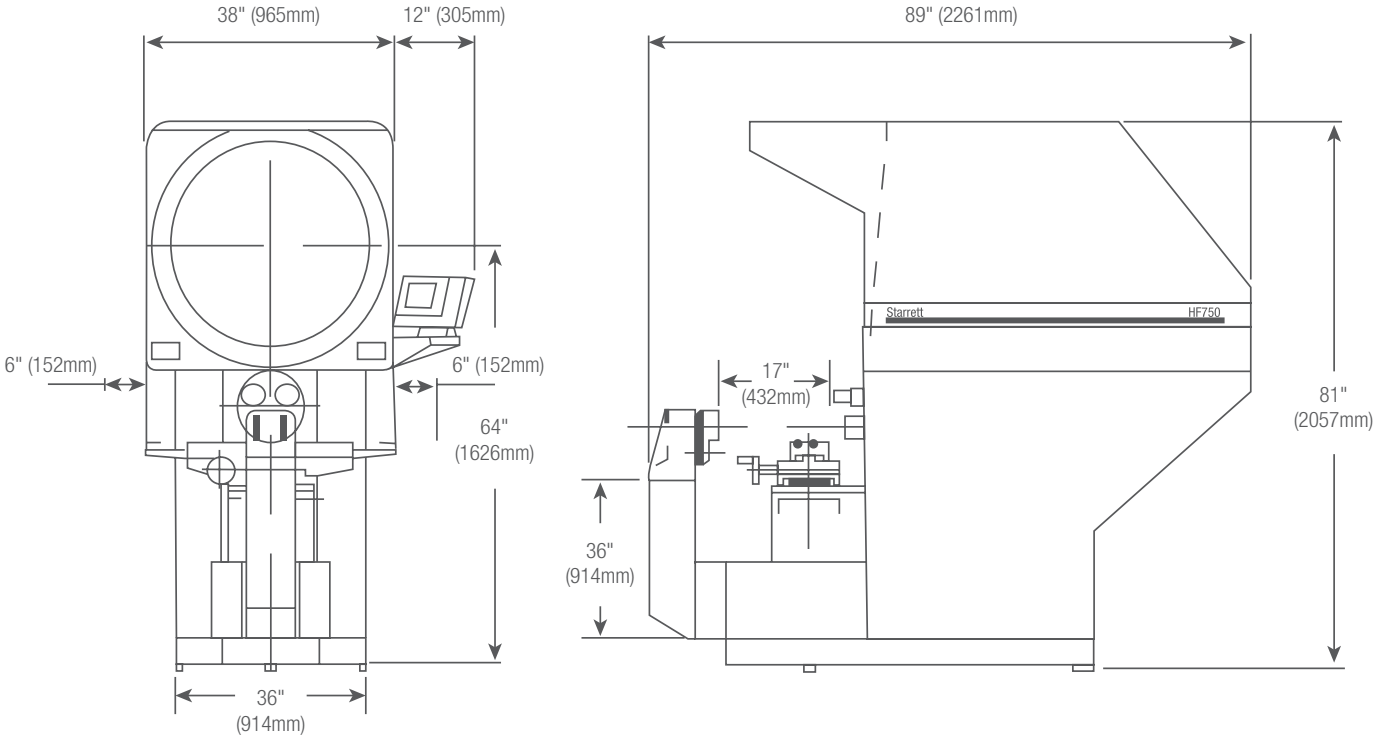

WEIGHT AND DIMENSIONS

	HF750
Net Weight	1660lbs 753kg
Shipping Weight	1800lbs 817kg
Crated Dimensions	96 x 48 x 91" 244 x 124 x 231cm

Side Bed Optical Comparators

HS600

The HS600 floor-standing horizontal optical comparator has all the same features as the HF600, except it has the screen position set to the side of the workstage area allowing close, comfortable and unrestricted access to the viewing and control area. A time tested, cost-effective solution for non-contact measurement. At the heart of these systems are precision optics, superb lighting, and a highly accurate workstage that combine to ensure bright, sharp images and exceptional accuracy. The HS600 is simple to use, yet has excellent capacity and performance to satisfy an exceptionally wide range of dimensional inspection applications and complex measuring requirements.

OPERATOR INTERFACE

	MetLogix™		Quadra-Chek®	
Feature	M2	M3	QC221	QC5200*
Mounted to comparator arm	x		x	
Color graphics	x	x		x
Touch screen operation	x	x		x
Operating system	Windows®	Windows®		
X-Y-Q axis digital readout	x	x	x	x
X-Y axis digital readout				
2D geometry software with skew	x	x	x	x
Optical edge detection option	x	x	x	x
Video edge detection option		x		x
CAD file import and export option		x		
CNC drive option	x	x	x	x
Software developer	MetLogix™	MetLogix™	Metronics/Heidenhain	Metronics/Heidenhain

*Available with either optical edge detection or video edge detection

HS600

SPECIFICATIONS

HF750	
Horizontal Travel	12" (300mm)
Vertical Travel	8" (200mm)
Focus Travel	3" (75mm)
Top Plate	25 x 9" (635 x 230mm)
Image	Inverted and reversed

Features and Specifications

- All metal construction with nickel plated stage tooling plate
- 24" (600mm) diameter screen with precision cross lines and overlay clips
- Motorized X and Y axes standard
- Two-axis power drive via joystick and variable speed control for fine adjustment
- Projection lens turret wtih four lens capacity (lenses not included)
- Turrent mounted condenser system and yellow/gree filter and provision to mount further accessories
- Stage Weight Capacity: 330lbs (150kg) (evenly distributed)
- Workstage Capacity Between Centers: 17.5" (440mm)
- Fully retractable duplex fiber optic surface illumination
- Halogen profile and surface illumination
- 0.001mm resolution Heidenhain linear scales
- Screen driven rotary Q-axis with 1' resolution
- Available with MetLogix™ M2 or M3 measuring software with touch screen and PC, or Quadra-Chek® digital readout systems
- Complete with full canopy and curtains

Options

- Six interchangeable lens magnifications including 10x, 20x, 25x, 31.25x, 50x and 100x
- Optional 5x fixed or 5x interchangeable on a 3-lens turret available by special order
- Interchangeable OV2 video camera system with 6.5:1 zoom lens
- Interchangeable TOV2 telecentric video camera systems with choice of 0.16x, 0.3x or 0.5x fixed magnification lenses
- Extended Stage Travel: 20" (500mm) X-axis; 8" (200mm) Y-axis
- Fully automatic CNC controls
- Automatic Optical Edge Detection
- Automatic Video Edge Detection available only with OV2 and TOV2 video camera systems
- Extensive line of accssories

HS600 Dimensions

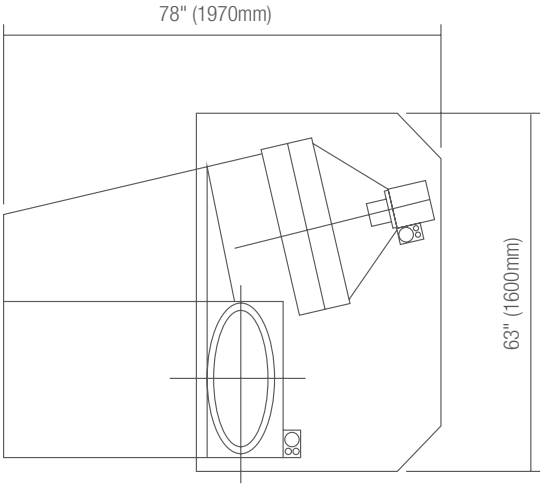

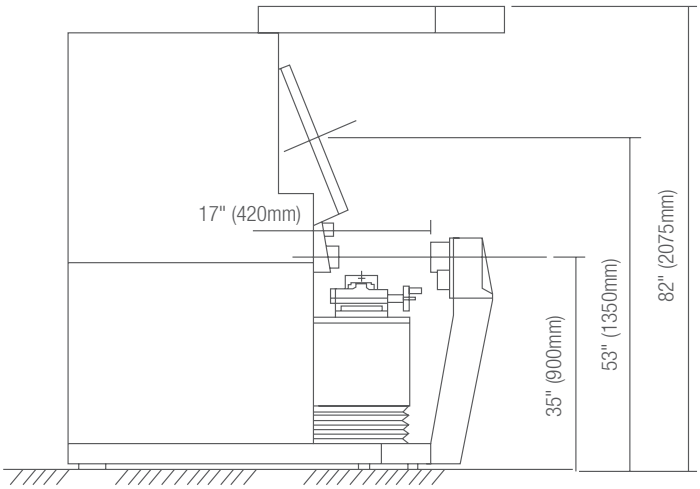

WEIGHT AND DIMENSIONS

	HS600
Net Weight	2315lbs 1050kg
Shipping Weight	2646lbs 1200kg
Dimensions (boxed)	83 x 89 x 93" 210 x 255 x 235cm

Side Bed Optical Comparators

HS750

The HS750 floor-standing horizontal optical comparator has all the same features as the HF750 except that it has the screen position set to the side of the workstage area allowing close, comfortable and unrestricted access to the viewing and control area. At the heart of these systems are precision optics, superb lighting and a highly accurate workstage that combine to ensure bright, sharp images and exceptional accuracy. A time tested, cost-effective solution for non-contact measurement, the HS750 is simple to use, yet offers excellent capacity and performance to satisfy an exceptionally wide range of dimensional inspection applications and complex measuring requirements.

OPERATOR INTERFACE

Feature	MetLogix™ M2	M3	Quadra-Chek® QC221	QC5200*
Mounted to comparator arm	x	x	x	
Color graphics	x	x		x
Touch screen operation	x	x		
Operating system	Windows®	Windows®		
X-Y-Q axis digital readout	x	x	x	x
2D geometry software with skew	x	x	x	x
Optical edge detection option	x	x	x	x
Video edge detection option		x		x
CAD file import and export option		x		
CNC drive option	x	x	x	x
Software developer	MetLogix™	MetLogix™	Metronics/Heidenhain	Metronics/Heidenhain

*Available with either optical edge detection or video edge detection

HS750

SPECIFICATIONS

HF750	
Horizontal Travel	12" (300mm)
Vertical Travel	8" (200mm)
Focus Travel	3" (75mm)
Top Plate*	25 x 9" (635 x 230mm)
Image	Inverted and reversed

*With machined slots for easy fixturing

Features and Specifications

- All metal construction wtih nickel plated stage tooling plate
- 24" (600mm) diameter screen with precision cross lines and overlay clips
- Motorized X and Y axes standard
- Two-axis power drive via joystick and variable speed control for fine adjustment
- Projection lens turret with four lens capacity (lenses not included)
- Turret mounted condenser system and yellow/green filter and provision to mount further accessories
- Stage Weight Capacity: 330lbs (150kg) (evenly distributed)
- Workstage Capacity Between Centers: 17.5" (440mm)
- Fully retractable duplex fiber optic surface illumination
- Halogen profile and surface illumination
- 0.001mm resolution Heidenhain linear scales
- Screen driven rotary Q-axis with 1' resolution
- Available with MetLogix™ M2 or M3 measuring software wtih touch screen PC, or Quadra-Check® digital readout systems
- Complete with full canopy and curtains

Options

- Six interchangeable lens magnification including 10x, 20x, 25x, 31.25x, 50x and 100x
- Optional 5x fixed or 5x interchangeable on a 3-lens turret available by special order
- Interchangeable OV2 video camera system with 6.5:1 zoom lens
- Interchangeable TOV2 telecentric video camera systems with choice of 0.16x, 0.3x or 0.5x fixed magnification lenses
- Extended Stage Travel: 20" (500mm) X-axis; 8" (200mm) Y-axis
- Fully automatic CNC controls
- Automatic Optical Edge Detection
- Automatic Video Edge Detection available only iwth OV2 and TOV2 video camera systems
- Extensive line of accessories

HS750 Dimensions

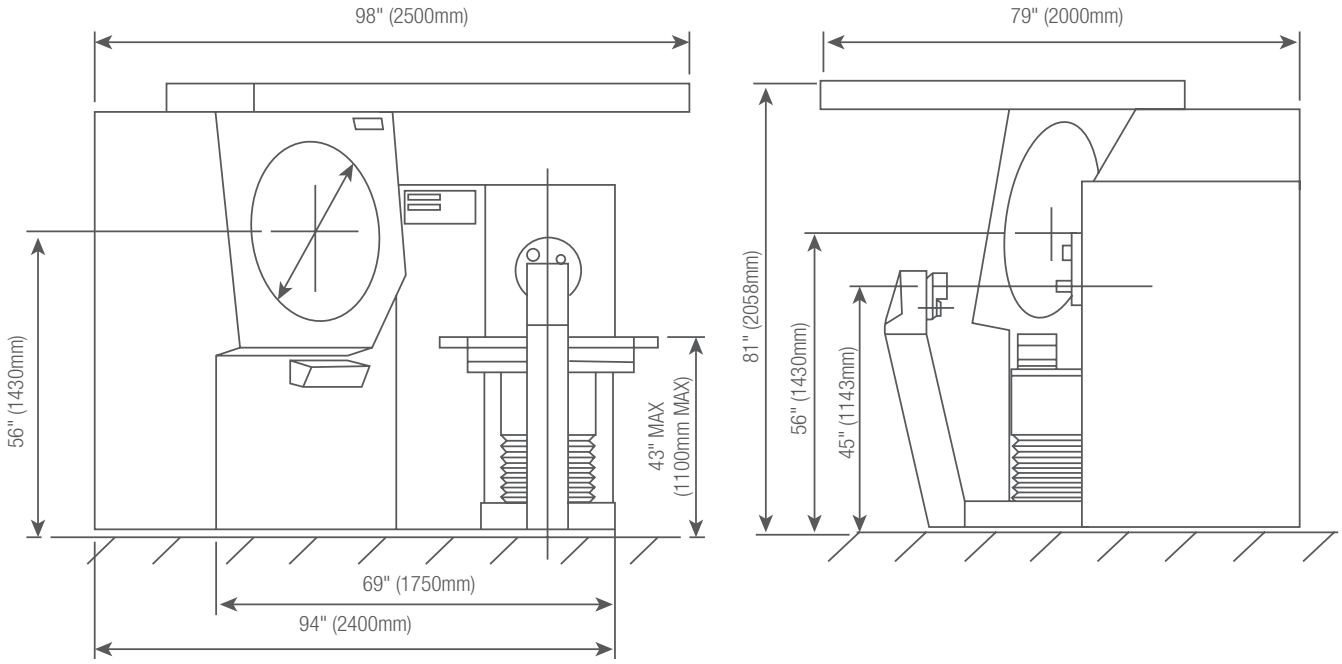

WEIGHT AND DIMENSIONS

	HS750
Net Weight	2932lbs 1330kg
Shipping Weight	3307lbs 1500kg
Dimensions (boxed)	119 x 94 x 91" 302 x 239 x 231cm

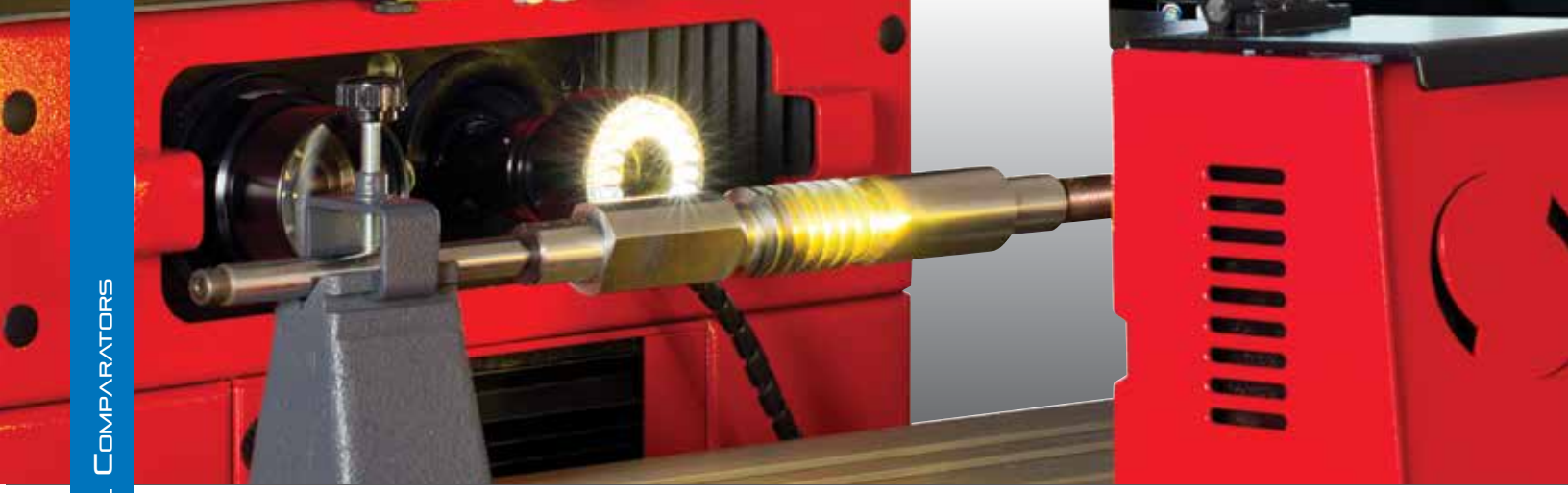

OV2™ Optical Comparator Video Adapter

The OV2 is a special zoom lens and video camera adapter that can be interchanged with the fixed magnification lens on Starrett Optical Comparators. Combined with MetLogix™ M3 measuring software and touch-screen with PC, the result is a low cost video measuring system, expanding the versatility of your optical comparator! The OV2 is available as an option with new Starrett comparators and as an easy-to-install field retrofit. When used with the dual-lens HD400, and the HF600 and HF750 multi-lens turrets, the OV2 allows immediate access to both Video and Optical measurement without changing the part setup.

Features and Specifications

- Interchangeable bayonet style lens mount with 6.5:1 zoom lens, surface ring light and video camera creates a video measuring system
- Changeover between normal optical mode and OV2 is easy and fast
- Lens locks into comparator body and is pre-aligned
- Up to 1.25" (32mm) of working distance allows maximum stage travel utilization
- Video magnifications up to 240x
- Utilizes MetLogix™ M3 measuring software and touch-screen with PC for video display
- Maximizes existing investment to provide a low cost entry into video measurement technology
- Available for other makes of optical comparators, please call for more information

TOV2 Optical Comparator Telecentric Video Adapter

The TOV2 telecentric lens and video camera can be interchanged with the fixed magnification lenses on Starrett Optical Comparators that utilize MetLogix™ M3 software. The TOV2 is available with a choice of 0.16x, 0.3x or 0.5x telecentric lenses as an option with new Starrett comparators and an easy-to-install field retrofit.

Features and Specificatons

- Interchangeable bayonet-style lens mount with choice of 3 telecentric lenses, a surface ring light and video camera to create a video measuring system
- Offers a choice of .16x, .3x or .5x telecentric magnification lenses
- Changeover between normal optical mode and TOV2 is easy and fast
- Lens locks into comparator body and is pre-aligned
- Utilizes MetLogix™ M3 measuring software and a touch-screen with PC for video display
- Maximizes existing investment to provide a low cost entry into video measurement technology
- Available for other makes of optical comparators, please call for more information

M3 software display

Specifications and Options

Model	HE400	HB400	HD400	VB300	VB400
Bench Top System	X	X	X	X	X
Floor-Standing System	-	-	-	-	-
Part View Orientation	Horizontal	Horizontal	Horizontal	Vertical	Vertical
Side Bed Version	-	-	-	-	-
Screen Diameter (in)	16"	16"	16"	12"	16"
Screen Diameter (mm)	400mm	400mm	400mm	300mm	400mm
X-Y Measuring Range (in)	10 x 4"	12" (16" optional) x 6"	16 x 6"	4 x 4"	8 x 4"
X-Y Measuring Range (mm)	250 x 100mm	300 (400mm optional) x 150mm	400 x 150mm	100mm x 100mm	200 x 100mm
Linear Glass Scale Encoder on X and Y Axis	Standard	Standard	Standard	Standard	Standard
Motorized X-Y Axis	-	Optional	Optional	-	-
CNC Control	-	Optional	Optional	-	-
Focus Range (in)	1.2"	2"	2"	3.5"	4"
Focus Range (mm)	30mm	50mm	50mm	90mm	100mm
Work Stage (in)	18.75 x 4.75"	21.25 x 5"	21.25 x 5"	8.8 x 8.8"	16 x 19"
Work Stage (mm)	475 x 120mm	540 x 130mm	540 x 130mm	225mm x 225mm	400 x 225mm
Load Capacity with Negligible Deflection (lbs)	15lbs	22lbs	22lbs	11lbs	22lbs
Load Capacity Maximum (lbs)	55lbs	110lbs	110lbs	15lbs	50lbs
Angular Measurement Resolution	1'	1'	1'	1'	1'
Profile Illumination	Standard	Standard	Standard	Standard	Standard
Surface Illumination	Standard	Standard	Standard	Standard	Standard
Quick Change Lens Mount (lenses not included)	Single	Single	Dual	Single	Single
Collimating Condenser with Yellow/Green Filter	Standard	Standard	Standard	Standard	Standard
Control System Software	QC100, QC200, M1, M2	QC100, QC200, QC5215, M1, M2, M3	QC100, QC200, QC5215, M1, M2, M3	LED Display, QC100, QC200, M1, M2	QC100, QC200, M1, M2
Display (control system dependent)	QC DRO, M1 tablet, 15" All-in-One touch screen PC	QC DRO, M1 tablet, 15" All-in-One touch screen PC, 24" touch screen monitor with PC	QC DRO, M1 tablet, 15" All-in-One touch screen PC, 24" touch screen monitor with PC	LED Display, QC DRO, M1 tablet, 15" All-in-One touch screen PC	QC DRO, M1 tablet, 15" All-in-One touch screen PC
Optical Edge Detection	Optional	Optional	Optional	Optional	Optional
Digital Video Camera System	-	Optional	Optional	-	-
Lenses - Screen Magnification (one required, not included)	10x, 20x, 25x, 31.25x, 50x, 100x	10x, 20x, 25x, 31.25x, 50x, 100x	10x, 20x, 25x, 31.25x, 50x, 100x	10x , 20x, 25x, 50x, 100x	10x , 20x, 25x, 31.25x, 50x, 100x
Iris Diaphragm	Optional	Optional	Optional	-	-
Precision Rotary Vise	Optional	Optional	Optional	-	-
Vee Block on Rotary Base	Optional	Optional	Optional	-	-
Precision Fixed Vise	Optional	Optional	Optional	-	-
Precision Centers and Vees	Optional	Optional	Optional	Optional	Optional
Helix Center Support System	-	-	-	-	Optional
Precision Rotary Work Stage	-	-	-	-	Optional
Glass Plate Work Holder	Optional	Optional	Optional	-	-
Field of View Diameter (in)	1.6,.8, .6 ,.5, .3, .15"	1.6,.8, .6, .5, .3, .15"	1.6,.8, .6 ,.5, .3, .15	1.6,.8, ,6, .3"	1.6,.8,.5, .3, .15"
Field of View Diameter (mm)	40, 20, 16, 13, 8, 4mm	40, 20, 16, 13, 8, 4mm	40, 20, 16, 13, 8, 4mm	40, 20, 16, 8mm	40, 20, 16, 8, 4mm
Working Distance (in)	3.1, 3, 2.5, 2.2, 2, 1.5"	3.1, 3, 2.5, 2.2, 2, 1.5"	3.1, 3, 2.5, 2.2, 2, 1.5"	3.1, 3, 2.5, 2"	3.1, 3, 2.5, 2, 1.5"
Working Distance (mm)	80, 76, 62, 57, 50, 41mm	80, 76, 62, 57, 50, 41mm	80, 76, 62, 57, 50, 41mm	80, 76, 62,50mm	80, 76, 62, 50, 41mm
Cabinet Stand 32"	Optional	Optional	Optional	Optional	Optional
Cabinet Stand 23"	Optional	Optional	Optional	Optional	Optional
Canopy and Curtains	Optional	Optional	Optional	Optional	Optional

VF600	HF600	HF750	HS600	HS750
-	-	-	-	-
X	X	X	X	X
Horizontal	Horizontal	Horizontal	Horizontal	Horizontal
-	-	Standard	Standard	Standard
24"	30"	24"	30"	30"
600mm	750mm	600mm	750mm	750mm
12" (20" optional) x 8"	12" (20" optional) x 8"	12" (20" optional) x 8"	12" (20" optional) x 8"	12" (20" optional) x 8"
300 (500mm optional) x 200mm	300 (500mm) x 200mm	300 (500mm) x 200mm	300 (500mm optional) x 200mm	300 (500mm optional) x 200mm
Standard	Standard	Standard	Standard	Standard
Standard	Standard	Standard	Standard	Standard
-	Optional	Optional	Optional	Optional
3"	3"	3"	3"	3"
75mm	75mm	75mm	75mm	75mm
25 x 9" (Optional 32" 8")	25 x 9" (Optional 32" 8")	25 x 9" (Optional 32" 8")	25 x 9" (Optional 32 x 8")	25 x 9" (Optional 32 x 8")
630 x 230mm	630 x 230mm	630 x 230mm	630 x 230mm	630 x 230mm
110lbs	110lbs	110lbs	110lbs	110lbs
330lbs	330lbs	330lbs	330lbs	330lbs
1'	1'	1'	1'	1'
Standard	Standard	Standard	Standard	Standard
Standard	Standard	Standard	Standard	Standard
4 Lens Turret	3 Lens Turret	4 Lens Turret	3 Lens Turret	3 Lens Turret
Standard	Standard	Standard	Standard	Standard
QC200, M2	QC200, QC5215, M2, M3	QC200, QC5215, M2, M3	QC200, QC5215, M2, M3	QC200, QC5200, M2, M3
QC DRO, 15" All-in-One touch screen PC	QC DRO, 15" All-in-One, 21" touch screen PC, 24" touch screen monitor with PC	QC DRO, 15" All-in-One, 21" touch screen PC, 24" touch screen monitor with PC	QC DRO, 15" All-in-One, 21" touch screen PC, 24" touch screen monitor with PC	QC DRO, 15" All-in-One, 21" touch screen PC, 24" touch screen monitor with PC
Optional	Optional	Optional	Optional	Optional
-	Optional	Optional	Optional	Optional
10x, 20x, 25x, 50x, 100x	10x, 20x, 25x, 31.25x, 50x, 100x	10x, 20x, 25x, 31.25x, 50x, 100x	10x, 20x, 25x, 31.25x, 50x, 100x	10x, 20x, 25x, 31.25x, 50x, 100x
Optional	Optional	Optional	Optional	Optional
-	Optional	Optional	Optional	Optional
-	Optional	Optional	Optional	Optional
-	Optional	Optional	Optional	Optional
Optional	Optional	Optional	Optional	Optional
Optional	-	-	-	-
Optional	-	-	-	-
-	Optional	Optional	Optional	Optional
2.3, 1.2, .9, .5, .2"	3, 1.5, 1.2, .6, .3"	2.3, 1.2, .9, .5, .2"	3, 1.5, 1.2, .6, .3"	3, 1.5, 1.2, .6, .3"
60, 30, 24, 12, 6mm	75, 37.5, 30, 15, 7.5mm	60, 30, 24, 12, 6mm	75, 37.5, 30, 15, 7.5mm	75, 37.5, 30, 15, 7.5mm
5.4, 5, 4, 3.5, 1.7"	6, 4, 3.6, 2.3, 1.9"	5.4, 5, 4, 3.5 1.7"	6, 4, 3.6, 2.3, 1.9"	6, 4, 3.6, 2.3, 1.9"
138, 127, 103, 88, 44mm	151, 101, 92, 60, 48mm	138, 127, 103, 88, 44mm	151, 101, 92, 60, 48mm	151, 101, 92, 60, 48mm
-	-	-	-	-
-	-	-	-	-
Standard	Standard	Standard	Standard	Standard

Accessories

Starrett offers a full range of accessories and purpose-built cabinet stands designed for our optical comparator systems to ensure efficient system setup for a broad range of applications.

Photo Key	Part No.	Description	For Models
A	OCN8	Large Centers and Vees	HF600, HF750
B	ORV2	2-1/32" Capacity Rotary Vise	
C	4U000	Magnification Checking Graticule	HE/HB/HD400 and VB400
	OGH1		HF600
	OGH2		HF750
D	OCN7	Small Centers and Vees	HF600, HF750
E	7P000	Centers and Vees	HE/HB/HD400
F	9W000	Helix Center Support Fixture	VB300, VB400, VF600
	3V000		
G	6H000	Centers and Vees	VB400, VF600
H	OVH1	Vertical Glass Plate Holder	HF600, HF750
J	7U000	Vertical Glass Plate Holder	HE/HB/HD400
K	4H003	Rotary Vise with 1-1/4" Capacity	HE/HB/HD400, HF600, HF750
M	6U003	Rotary Work-stage	VB400, VF600 for use on 200mm x 100mm workstage
N	4H002	Fixed Position Vise with 1-1/4" Capacity	HE/HB/HD400, HF600, HF750
P	4H004	Universal Vee Block on Rotary Base	
S	P-10095	32" Cabinet Stand	HE400, HB400, HD400, VB300, VB400
	P-10102	23" Cabinet Stand	
T*	P-10485	Canopy and Curtains designed to be used with Starrett cabinet stand	HE400, HB400, HD400, VB300, VB400

*Product not shown

SOFTWARE

MetLogix™ Software

M1, M2 and M3

FOR OPTICAL COMPARATORS

Graphics rich display, large icon buttons, and intuitive operation. Coordinate display for X and Y linear axes and Q angular values for screen rotation. Easy part alignment and datum function.

M1 shown on HE400

M2 shown

Features

- Clean and simple touchscreen interface with large icon buttons and intuitive operation
- Graphics-rich display providing instant information on feature form, tolerances, and measurement data
- Coordinate display for X and Y linear axes and Q angular values for screen rotation
- Easy part alignment and datum functions
- Measure and tolerance these geometric features: point, line, angle, distance, radius, diameter
- As you measure, a part view is created in the feature view. Constructions between features such as distances and bolt hole pattern can been done by simple selections from the part view.
- For repetitive part measurement, create a part program that will visually guide operators through part measurement
- Optional optical edge detection provides better throughput and removes operator subjectivity
- Video edge detection option on M3 only
- Four different report forms can be printed or exported to Microsoft Excel, text files, or to an SPC program
- M2 and M3 utilize a Windows®-based operating system enables flexible data export and interface capability
- M1 utilizes an Android operating system and a Bluetooth® connection to the host Optical Comparator
- Fast, easy connection to printers and networks

M1, M2 and M3

MetLogix™ control software provides a broad range of powerful, user-friendly functions on a compact, icon-based touchscreen interface in place of the traditional control.

	MetLogix™ M1	MetLogix™ M2	MetLogix™ M3
Mounted to comparator arm	x	x	
Color graphics	x	x	x
Touch-screen operation	x	x	x
Operating system	Android	Windows®	Windows®
X-Y-Q (angle) measurements	x	x	x
2D geometry software with skew	x	x	x
Optical edge detection option	x	x	x
Video edge detection option			x
CAD file import and export option		x	x
CNC drive option		x	x

M3

FOR VISION SYSTEMS

Multi-touch software control that can pan and zoom with pinch, swipe, or touch. Works with active part views and live video feeds (or use the conventional mouse interface). Custom "Eye Measure" probe captures complex edges generated by a finger path drawn on the touch screen. Measure Logic probe intelligence provides instant feature determination and measurement with a single touch.

Intuitive graphic menu

Display flexibility or export the measurement report

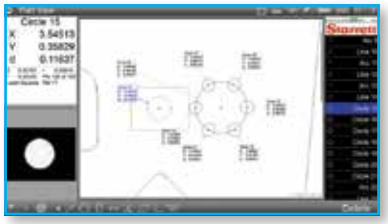

Graphic window with selectable Features and notes

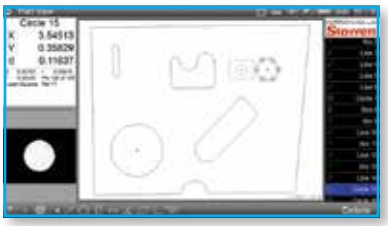

Graphical window with the selected data points

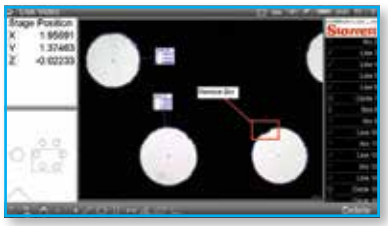

Live video image with data from selected points

Software MetLogix™ M3 with touch touchscreen interface

FEATURES

- DXF CAD file import for comparing parts being inspected to the actual design file; no need for cumbersome Mylar overlays
- "Vtouch" Probe has video touch probe functionality – just click for simple acquisition of points on a feature's edge
- Part View can generate distance and tangent lines from within the graphical part view. The "Gesture Menu" can be used for feature creation and manipulation tools.
- "Quick Annotate" allows data on several features to be displayed simultaneously with smart marquee feature selection
- Application of universal tolerance value entry according to feature resolution groupings
- Feature Detail Graphics: Individual feature views display point cloud distributions, nominal deviations, and tolerance results. Scroll through Actual, Nominal, Tolerance, Deviation and Data Fit Type information
- Simple machine/camera calibration with popular machine and video correction methods
- Windows®-based, globally recognized OS for flexible data exporting and interface with Windows® applications
- DC (FOV) software option

Quadra-Chek® Software

Modern metrology is a complex sequence of measuring, recording, analyzing and reporting dimensional data. The conceptual model underlying the Quadra-Chek® digital readout design organizes the work-flow to support operators at every stage of the measurement process.

QC100

- Perform 2 and 3 axis measurements at very high levels of precision and accuracy
- Measurements viewed on the front panel LCD can be transmitted to a PC over a standard serial port connection, or to a printer over a parallel or serial port

QC200

Metrology DRO requires a video monitor display and cross-hair generator in vision configuration. QC200 is a time-saving measurement tool with patented Measure Magic® technology. Ideal for measuring 2D features on Optical Comparators and Manual Vision Machines.

- Inch/metric conversion, toggle between incremental/absolute and simple zero reset
- Skew function for ease of part alignment
- Integrated geometric tolerancing allowing for pass/fail measurements
- Simple part programming with measure guide
- USB and RS232 Interface
- Linear and segmented linear error correction
- Intuitive displays
- Crisp, clear, bright black and white LCD display
- Optional optical edge for comparators

QC100

QC200

QC5200

Metrology software utilizes a Windows® 64-bit operating system for video measuring machines.

The QC5200 supports a wide range of industries that require precise measurement and inspection of 2D parts using a single sensor. This product features an intuitive user interface and simple, meaningful visual displays. The design reflects a deep understanding of the user's needs along with a process model that supports the operator at every stage in the measurement process.

Features

- 2D capabilities
- 2D part profiling
- Advanced calculation capabilities
- Advanced geometric tolerancing
- Alternate algorithms
- Auto-focus
- Auto program from CAD files
- Continuous edge mode
- CNC part positioning and automated measurement
- Customizable screen layouts
- Data cloud analysis
- Data export to wide variety of applications
- Image capture with drag and drop data reporting
- Integrated runs database
- Intuitive program editing capability
- Multiple reference frames
- Multiple language support
- Patented Measure Magic technology
- Powerful yet intuitive video edge detection tools

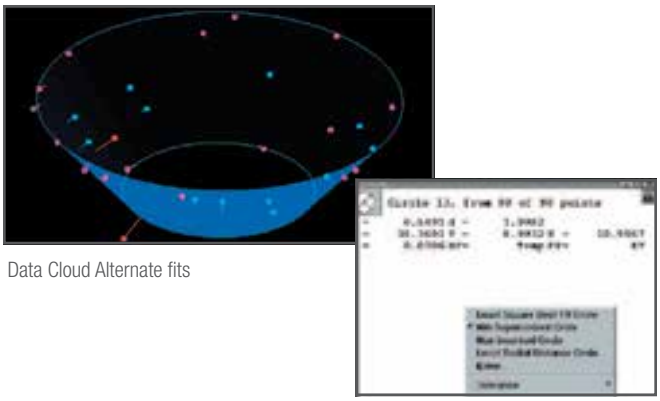

Data Cloud Alternate fits

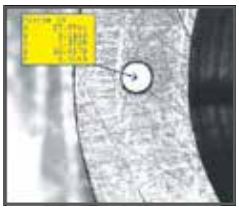

Image View

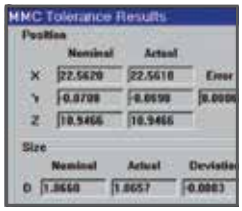

Tolerance

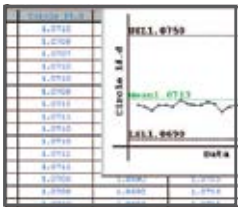

Integrated Database

QC5300

Metrology software picks up where the QC5200 leaves off. This product offers multi-axis dimensional measurement of 2D and 3D parts. The QC5300 integrates an innovative user interface, state of the art ergonomics, powerful data import, export and data analysis tools.

Features

- 3D capabilities
- 3D data clouds
- 3D measurement set
- 3D offset alignments
- 3D part view
- 3D part profiling option
- Image processing tools
- Pattern recognition
- Renishaw touch probe compatibility
- Optical laser sensor
- "X-Y" 2D measurements with optional "Z" Axis for height measurements
- Vector probing

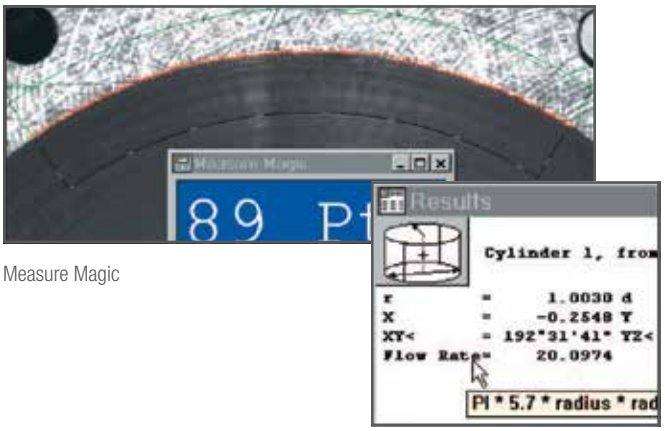

Measure Magic

Monitor not included

D1 Inspection Software

Features

- View and manipulate live and static images from a variety of inspection devices on any Windows® based operating system. Mouse/Keyboard and touchscreen systems are supported.
- A simplified operating interface requires only a few quick clicks to capture, mark up, export, print and email images directly from your inspection equipment
- Zoom and Pan the camera feed until the desired image is displayed. Add custom text, and graphic elements to generate detailed image capture for defect reporting and to improve overall visual communication of parts and component characteristics.
- Perform basic calculations of feature size, position, and orientation using a simple cross-hair tool. Translate or rotate the cross-hair tool within the image window to probe circle, line, point, and angle features within the field of view.
- Add feature annotation directly to selected features to display size, position and orientation results on either the video frame or within a blank part view space
- Access previously stored images easily in the thumbnail image list. Convenient date and time stamps are added to help sort and review collections of images.

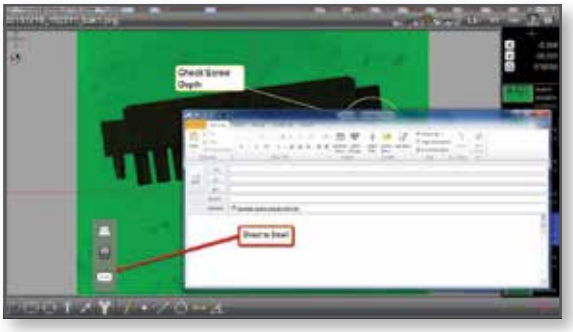

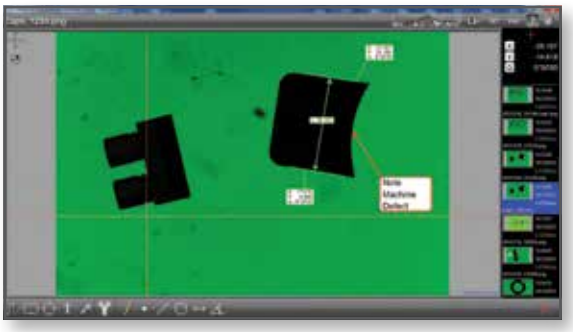

D1 Software display

KineMic - KMR with D1 software

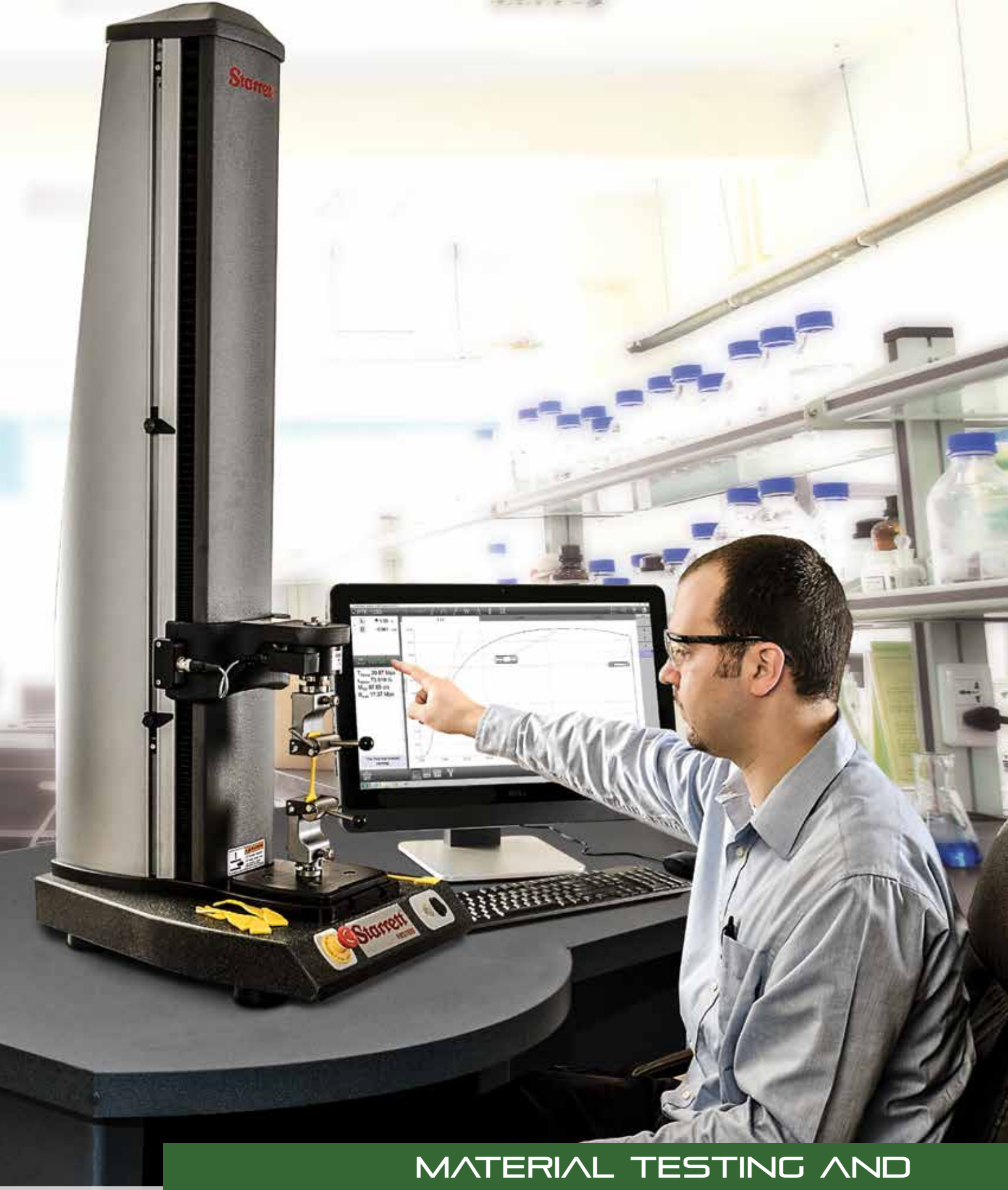

MATERIAL TESTING AND FORCE MEASUREMENT

Systems

L3 Systems

L3 Systems represent a new and easier solution for creating a test; performing a test; analyzing your test results; and managing test data.

L3 Systems meet the requirements of today's research scientist, design engineer, quality manager or technician responsible for material characterization, verification and validation.

Unlike traditional material testing systems that involve programming and having to know exactly what measurements are required before the test, L3 systems employ a simple methodology. You create your test method. Your test method creates your graph. And then you measure on the graph using a set of analysis tools.

You can measure any point and any segment anywhere along the graph. Analyze using stress, strain, load, distance, and time. Your measurements are displayed on your graph and shown in data tables with statistics and tolerances.

Features

- Measure stress, strain, load, elongation, extension, and time results using tension, compression, flexural, cyclic, shear, and friction applications
- Create test setups using internationally accepted testing standards from ASTM, ISO, DIN, TAPPI and more, or create your own custom test methods
- Measure and calculate results graphically:
- Points
- Modulus, Slopes and Intercepts
- Offset Yield
- Min/Max/Avg
- Breaks (Rate, %Drop)
- Peaks and Valleys
- Deltas
- Rates
- Hysteresis
- Work/Energy
- Options for digital and analog I/O and Control Logic

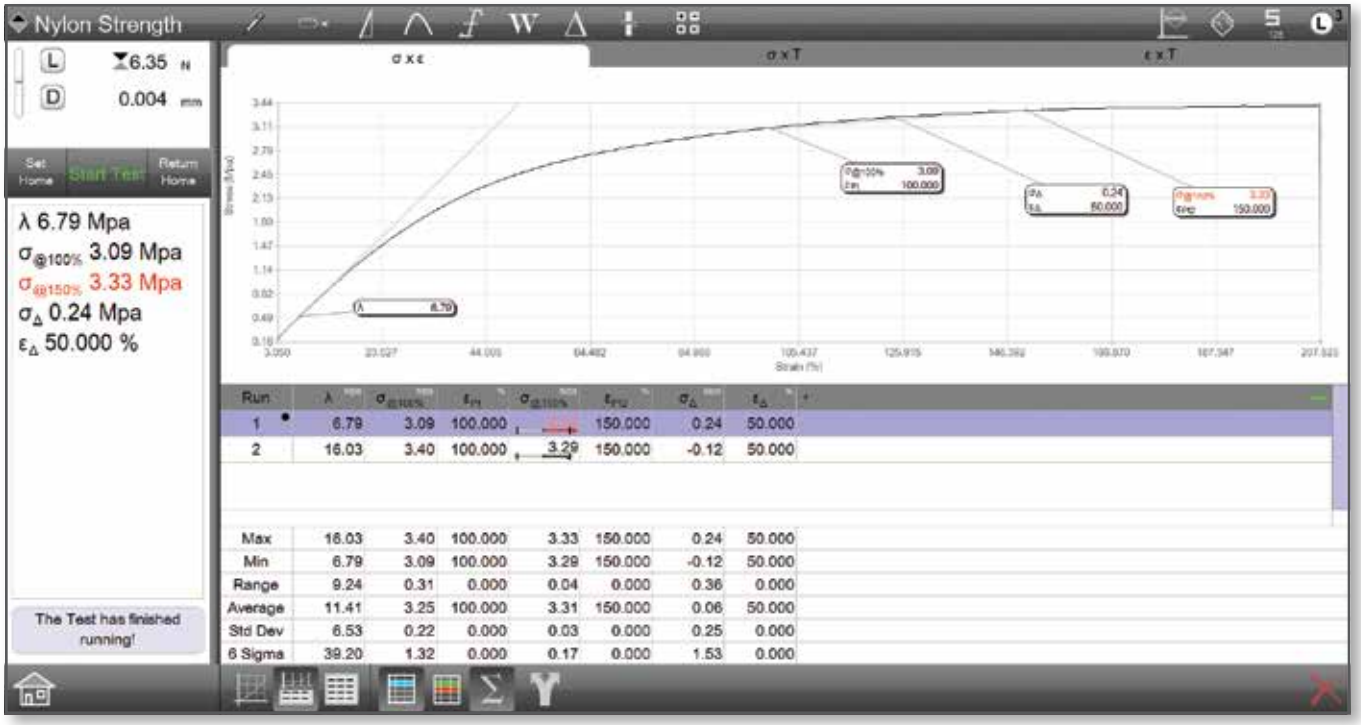

Measure results using SI or Imperial units of measure. Display results in Engineering Notation if needed. Specify resolutions for any unit type.

View results on any of these graph formats: Stress vs. Strain, Stress vs. Time, Strain vs. Time, Load vs. Displacement, Load vs. Time, Displacement vs. Time. Display full graphs or split graphs with the data table showing statistics and tolerance values.

(Above) Out-of-tolerance results are displayed in red, including a tendency bargraph in the data table.

Statistics can be displayed and your raw data and results can be exported automatically using the Share function.

(Below) The Tolerance view provides more detailed information as to "why" the result is displayed in red.

The operator can add comments about each test run, or use the Extra Coefficients function to display additional information for reporting. Standard reports are included, or export as a .csv file for use with Microsoft® Excel®, Word®, Access or your 3rd-party SPC application.

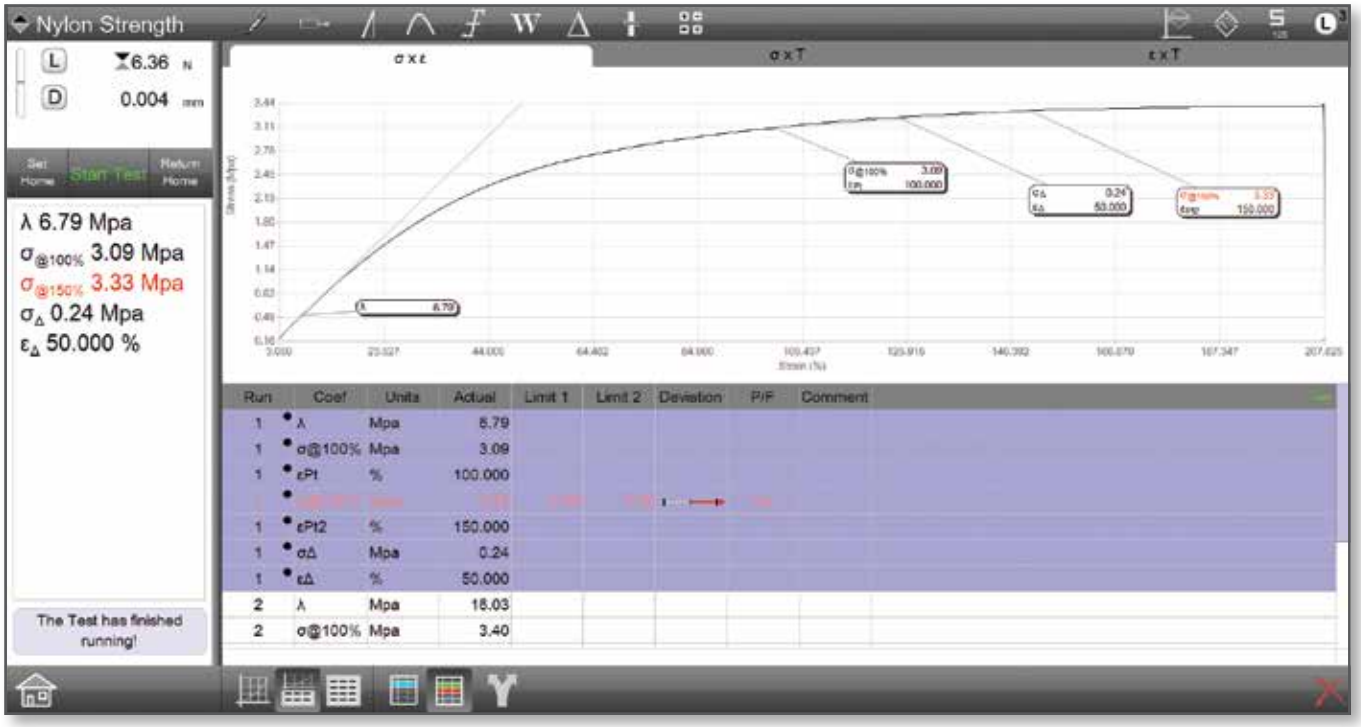

Systems

L3 Systems

Construct simple and complex multi-step test setups. Create your test method to an accepted standard or to your specific testing needs.

Create your test method and then email to other locations so that your testing is always performed in the exact same manner with the same measurements and results.

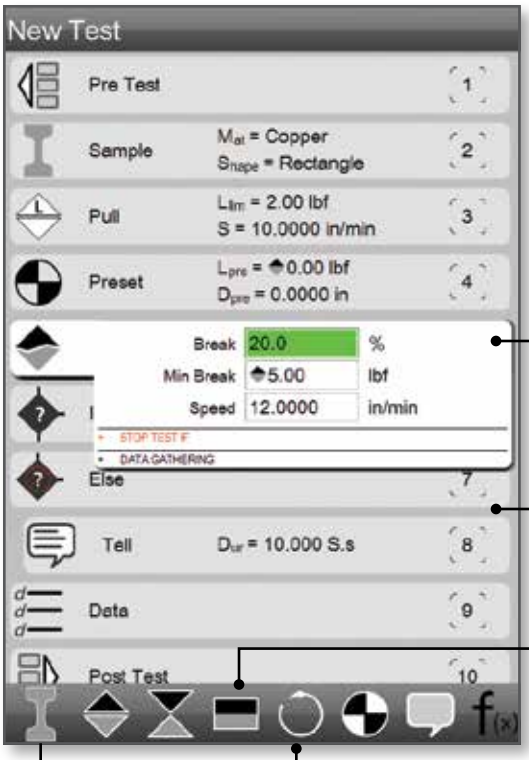

Tensile and Compression steps are used to perform "go to moves". Go to a Limit or Break at a velocity or load rate. You can choose exceptions for any move and decide whether to collect data during the move.

Shown is an operator prompt based on a conditional branching state. If the measured result is "out-of-tolerance", a message is displayed alerting the operator. If the result is within the tolerance range, no message is displayed.

Hold steps are used for creep and relaxation testing. You can hold at a limit for a specified duration up to 24 hours, if necessary.

Cycle based on any of your steps in your test method. You may cycle up to 1000 times or for a duration of up to 24 hours at a sampling rate of 1Hz. Each test may have a maximum of 100,000 data points.

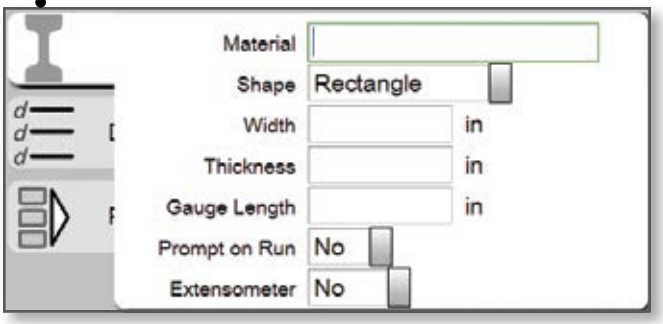

The Sample Definition step lets you name your material, specify the shape and its dimensions. You can enter dimensions digitally using a Starrett micrometer, or caliper.

Shown is the setup dialog for the optional I/O step. It allows you to control and activate external devices such as annunciators through the test frame's digital or analog I/O channels.

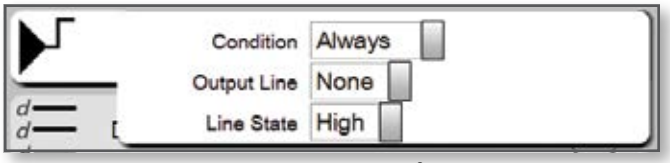

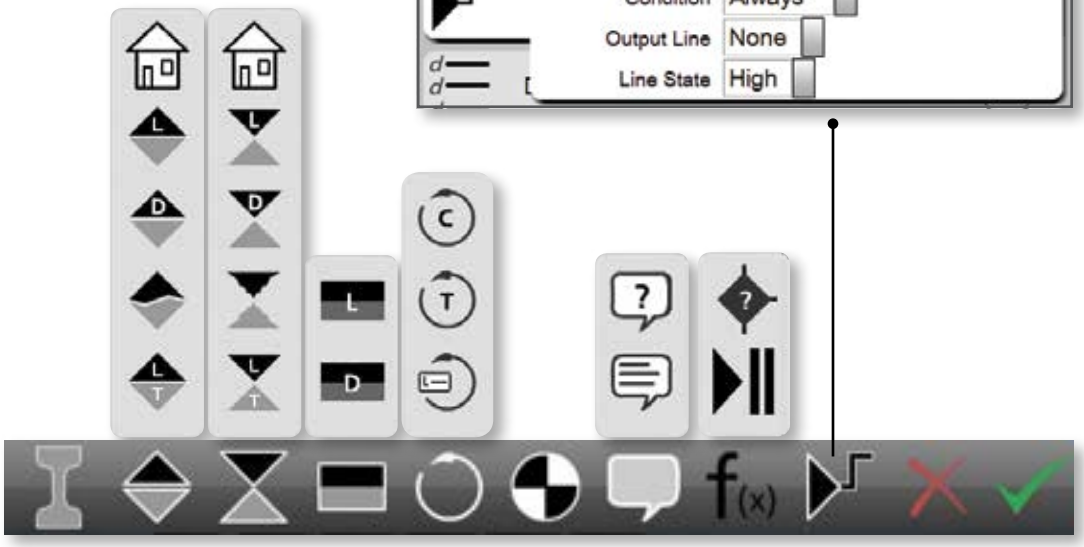

The Slope tool is used to find modulus. Multiple methods are available including automatic, chord, tangent, and best fit.

The Delta tool measures the differences between results. You can find creep by simply choosing this tool and the two points you want to compare.

Use the Annotation tool to add notes to any graph view.

Use the Min/Max/Avg tool to find maximum and minimum values. It can also be used to calculate averages of all data between a segment you specify.

You can compare multiple graphs of your test runs and measure delta and variances between tests at precise points. Ideal for benchmark analysis.

Use the Offset Yield Point tool to measure any data point on any of the three graph views. The point may be implicit or may be derived based on another result. For example, you can find the point at 100mS before the point at 100% strain.

Use the Work tool to determine the energy or resilience from your stress-strain graph.

Use the Formula Builder to create custom expressions and derived results using algebraic, trigonometric and logarithms.

The Peak/Valley tool is ideal for peel and coefficient of friction testing. Measure the maximum, minimum, average and counts of peaks and valleys.

Find break results based on a percentage drop or based on a load rate decrease.

The Offset Yield Point tool is used to measure the yield strength at a 2% strain offset. Shown is modulus at 100% and 150% and the delta between these two measurements.

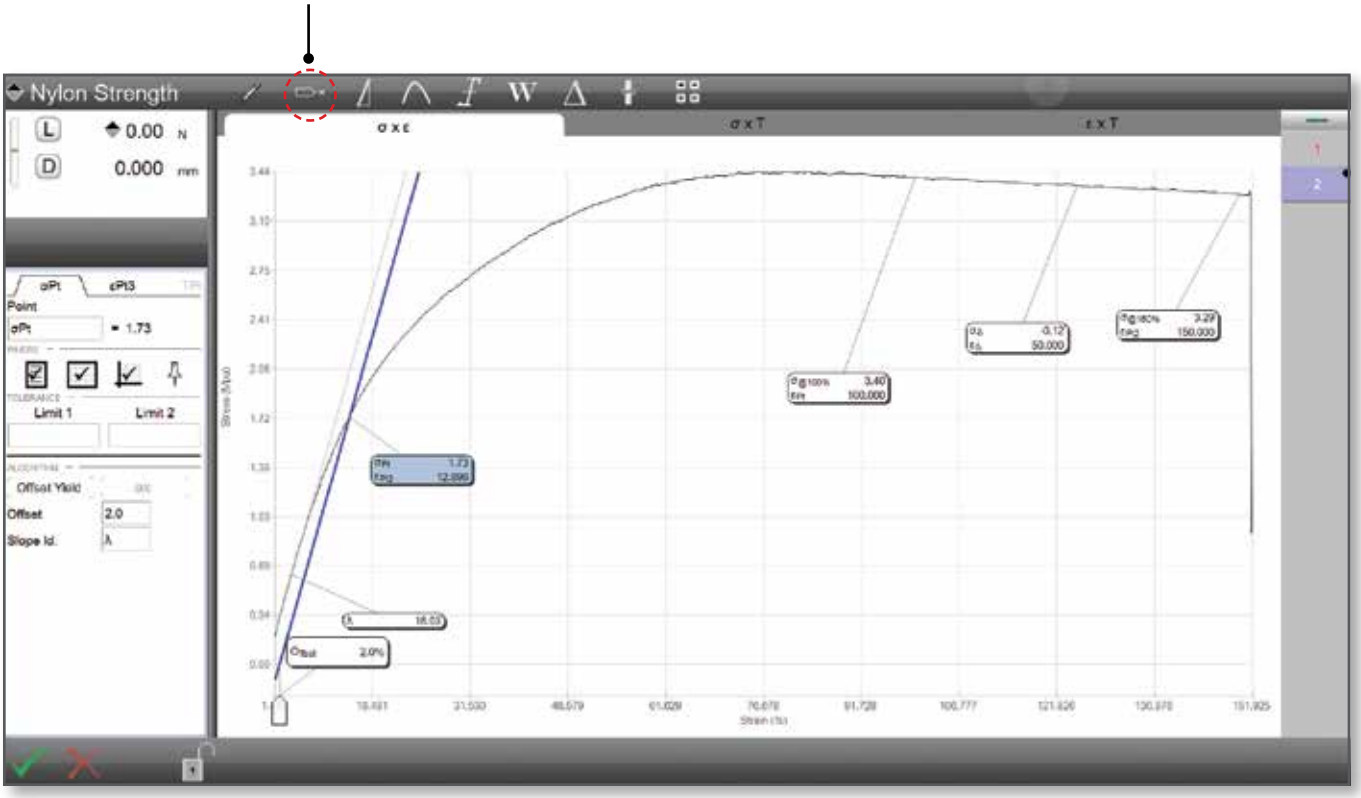

Systems

L2 Plus Systems

Designed for advanced force measurement and analysis, L2 Plus Systems are optimized for quality and engineering personnel. Test setup is intuitive, efficient and non-compromising.

With L2 Plus systems you not only find the measurement, but you have the information that shows you "why, when and where" the measurement occurs.

Like our L3 systems, L2 Plus measurements and analysis are performed graphically using our Windows®-based, all-in-one computer workstation. Create high resolution graphs based on load, distance, height and time. Then measure any point or segment on your graph using a set of analysis tools.

Features

- Ideal for tension, compression, rate control, flexural, cyclic, shear, and friction applications
- Measure and calculate results graphically:
  - Points
  - Slopes and Intercepts
  - Min/Max/Avg
  - Breaks
  - Peaks & Valleys
  - Deltas
  - Rates
  - Work/Energy
- Create test setups using internationally accepted testing standards from ASTM, ISO, DIN, TAPPI and more, or create your own custom test methods
- Options for digital and analog I/O and Control Logic
- Options for arithmetic, trigonometric and logarithmic calculations
- Use bar code scanning to access test setups

Perform advanced testing methods such as load rate control. Set a target limit then pull/push at a rate using load per time velocity.

Specific algorithms for peak & valley measurements are supported: find peak/valley, find maximum/minimum peak/valley, find averages for peaks/valleys.

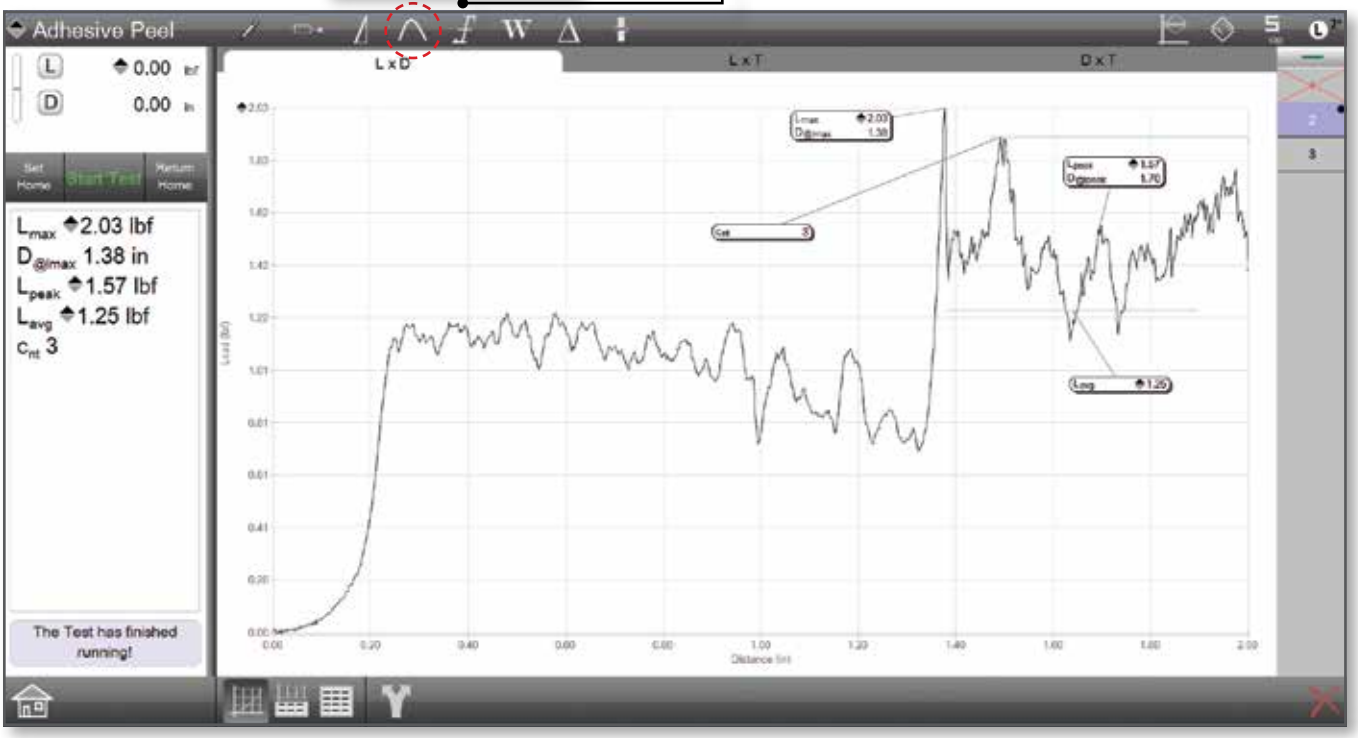

Your results can be displayed in markers on your graph, in data tables, or in combinations. Graph types are: Load vs. Distance, Load vs. Time, and Distance vs. Time. Markers can display the load, distance and time to a specific point on the graph.

(Above) Use the Peak/Valley tool to locate the peaks for the entire test duration or for a defined segment within the test. per ASTM F88 Qualify your peaks and valleys using the sensitivity adjustment. Measure average, counts, maximum, minimum and more.

(Below) The load average is calculated for qualified peak values using a load sensitivity of 25%. Adjust for sensitivity using the data definition menu or by using the sensitivity adjustment bar on the y-axis. In this example, the load average is specified at a segment starting at the maximum load point (Lmax).

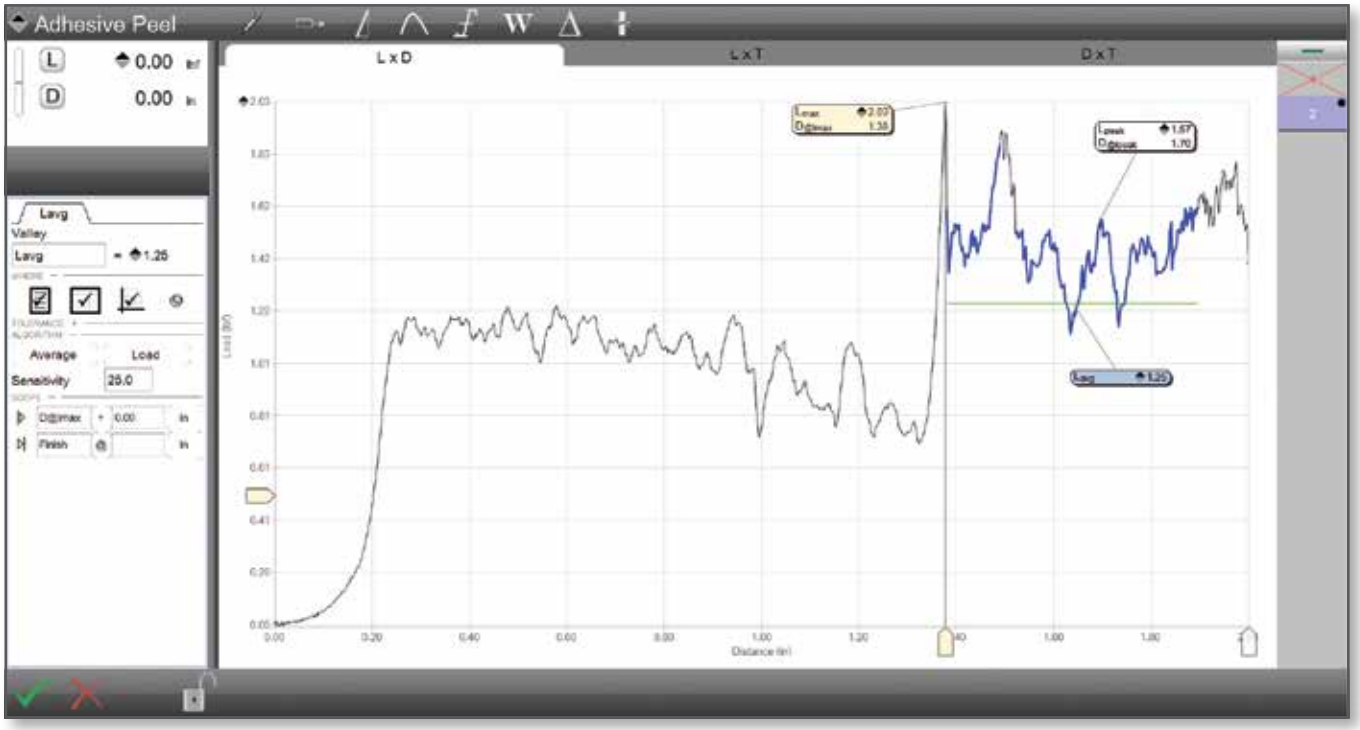

Systems

L2 Plus Systems

Your test step can include "exceptions" which help with test flow control. If an exception occurs the test run can automatically abort. Your test data may be saved and exported, or you can choose to disregard the test altogether.

Here the test exceptions are "abort if the Load reaches 4.00lbf, or if the sample breaks after first measuring 2.00lbf".

Two forms of Break analysis are supported: %Drop from Maximum Load and Rate.

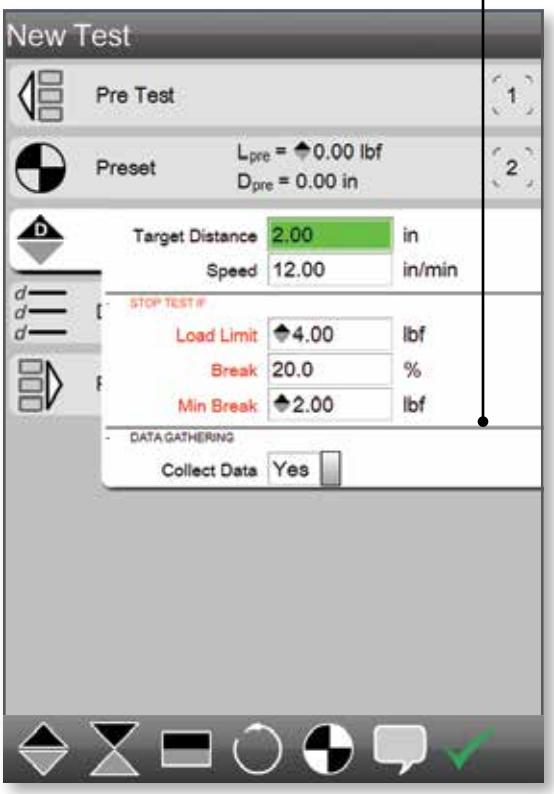

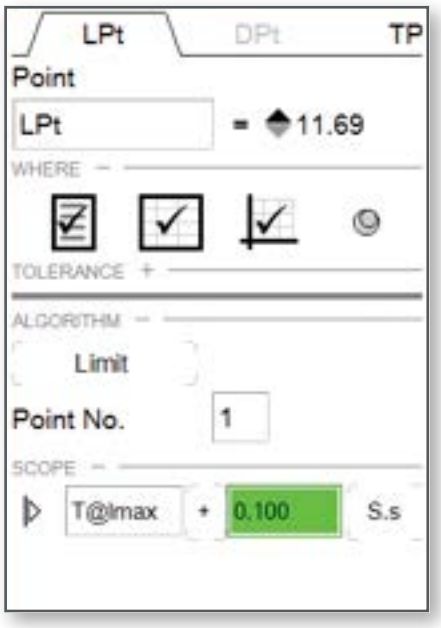

Scoping allows you to specify any point or segment of data from your graph for analysis. Measure based on load, distance and time.

Complex motion-control test steps may be performed, including load rate control. This test method lets you specify a load target and a velocity based on load rate. In this example, the target load is 15.00lbf and the test requires that you get to the target in 5 seconds, or a rate of 180.00 lbf/minute.

Make sure button is secured within test fixture

The Test has stopped because of an Exception
(press anywhere to continue)

System messages and prompts provide operators with alerts during testing. User prompts include ASK and TELL messages:

- ASK messages require an operator acknowledgement.
- TELL messages are displayed for a duration or until the operator acknowledges the message.

System messages display in red to alert the operator to alerts and warnings.

A bar code reader can be used to quickly load and launch your test setup. Ideal for busy, high-volume production applications where you are performing many test setups.

Measure these common results and more using your L2 Plus system:

- Absolute Peak
- Average Value (All Peaks)
- Average Value (Selected Peaks)
- Average Value (All Valleys)
- Average Value (Selected Valleys)
- Average Results (Regions)
- Break (Load)
- Break (Load/Extension Rate)
- Break (% Maximum)
- Coefficient of Friction
- Delta Creep
- Delta Relaxation
- Initial Peak
- Initial Valley
- Hold Preset Point
- Hysteresis Loss
- Slope Intersect
- Total Creep
- Total Relaxation
- User Calculations
- Work/Energy/Resilience

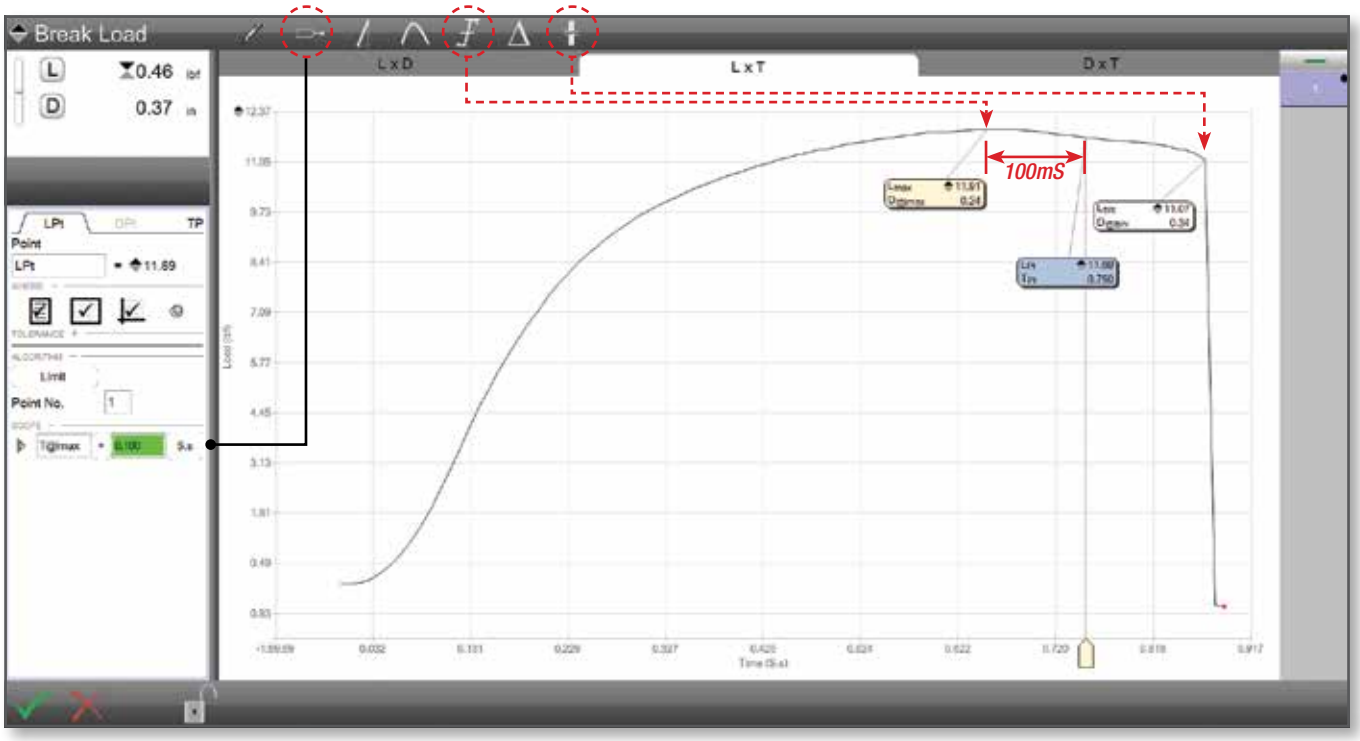

(Above) Anchoring is a scope feature. It allows you to easily measure from an existing result (anchor).
In this example, the load value is found at 100mS after the maximum load (Lmax). In the scoping operation for the point result (Lpt), the Lmax is used as an anchored result. The "+" sign signifies "after" the anchored Lmax. The scope value is specified as time (S.s) and entered as 0.1 second. You can scope on load, distance or time.

(Above) Using the "Multiview" function, you can measure using multiple graphs from your batch. Graph traces are overlaid onto one another and color-coded for identification. In this example, the delta variance is measured between the three test runs. The variance is measured at a point between the graph with the greatest value and the graph with the lowest value. This function can be used for "benchmark comparisons".

Systems

L2 Systems

Whether your application is high-volume in situ production, incoming inspection and validation, or just basic force measurement, the L2 System is an economical and easy-to-use solution.

L2 Systems feature a small footprint making them ideal for lean manufacturing environments. Create test setups in seconds using templates or create complex multi-stage test setups using the L2 Test Builder. No programming experience required.

L2 Systems operate using a Windows®-based tablet PC. Load, distance and time-based results are displayed in a large format for easy interpretation. Graphical representation of each test can be displayed. Data tables display results with tolerance and statistical calculations. Standard reports are included, or export data for use with other applications. System capacities range from 500N (112lbf) to 50kN (11,250lbf).

Features

- Ideal for tension, compression, flexural, cyclic, shear, and friction applications
- Create test setups using internationally accepted testing standards from ASTM, ISO, DIN, TAPPI and more, or create your own custom test methods
- Measure and calculate results:
  - Min/Max/Avg
  - Breaks
- Options for digital I/O and Control Logic
- Options for arithmetic calculations

L2 systems can use any FMS, FMD, MMS or MMD test frame. Shown is an L2 system using an FMS-2500 test frame.

L2 Systems feature a tablet computer with touchscreen display. The system is WiFi®, Bluetooth® and USB compatible.

Perform common test methods such as determining maximum load, maximum deflection, average loads or how product reacts when a constant load is applied for a specified period of time.

L2 systems can determine break strengths and the sample's characteristics at load and extension limit values and provide you with immediate pass/fail indication.

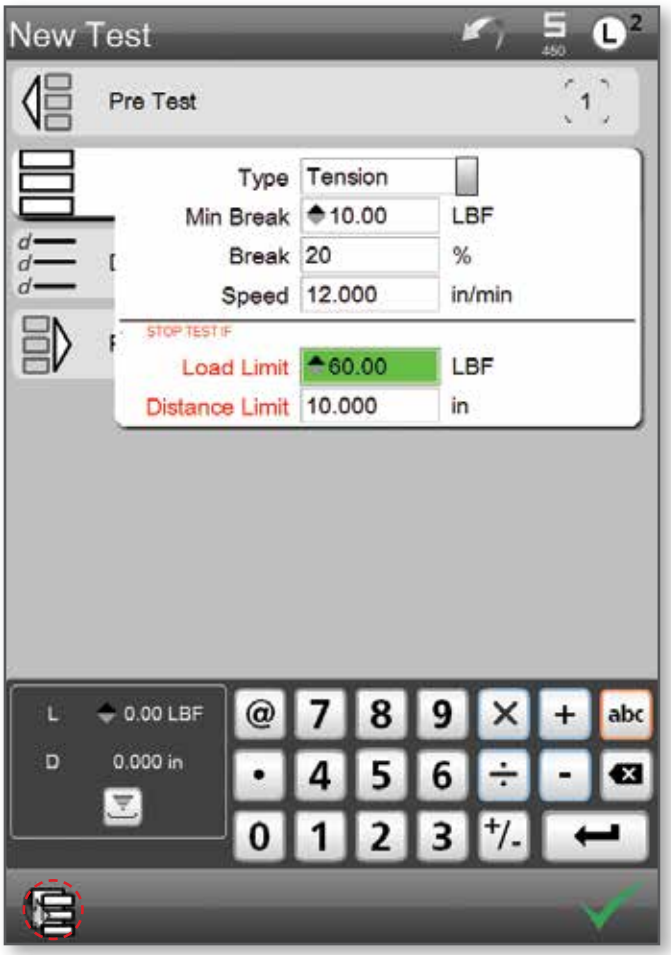

The L2 system includes test templates- pre-configured test setups for load, distance and break limit testing. These can be used to setup a test in seconds. Simply fill in the blanks and your setup is complete.

Use the Convert to Test Builder function and your test template is converted to a full Test Builder setup.

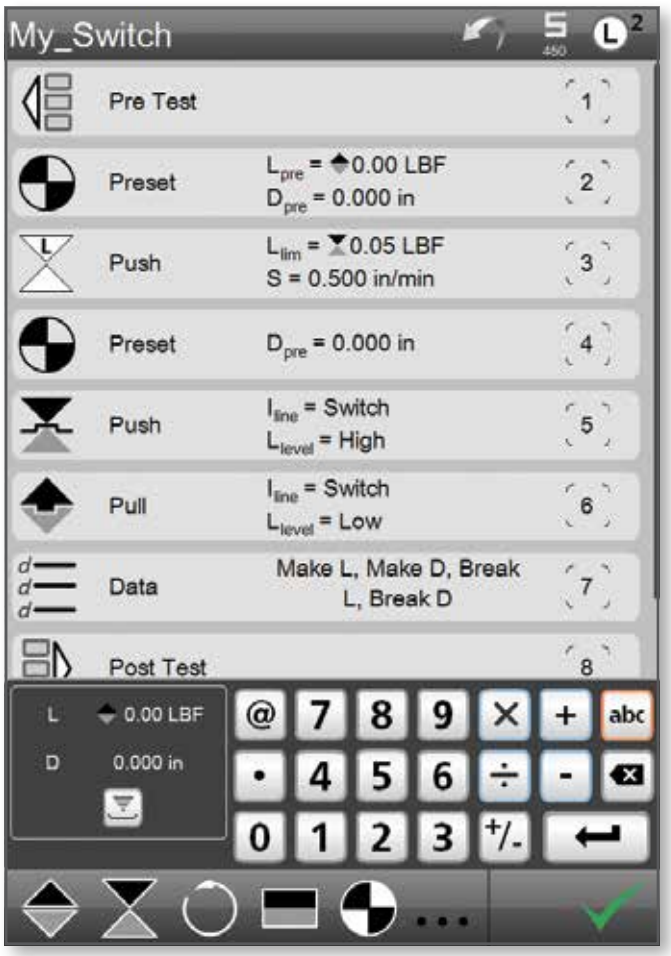

Use the Test Builder application supplied standard with L2 systems to construct simple and complex test setups. This example shows a contact closure test that also uses the optional Automation Builder and digital I/O. The Test Builder methodology is same across all Lx systems.

Systems

L2 Systems

Results, also called coefficients have default names. These can be changed using the Coefficient Settings function. You can rename a coefficient so that it is universally applied to all test setups.

Specialized functions, including deflection compensation or the ability to limit a load cell sensor are features to protect your instrumentation and to minimize operator errors. The Max Load Allowed feature can help prevent accidental load cell overloading.

All Lx systems let you map where information is saved or exported to. Using the File Locations setting, you can specify how and where information is sent- automatically or on-demand. Test files, for example, can be created at a central location and then emailed to production facilities. This ensures that all manufacturing cells are using identical testing setups.

All Lx systems can display in multiple languages. A translation utility is included with all Lx systems. This allows custom translation to be performed so that dialect or specialized terms are universally applied to all displays.

The Results view can be configured to display the most critical result in large text.

The Statistics view displays the results and their associated statistical values. The header displays the total, passed and failed test runs. Failed runs display in red.

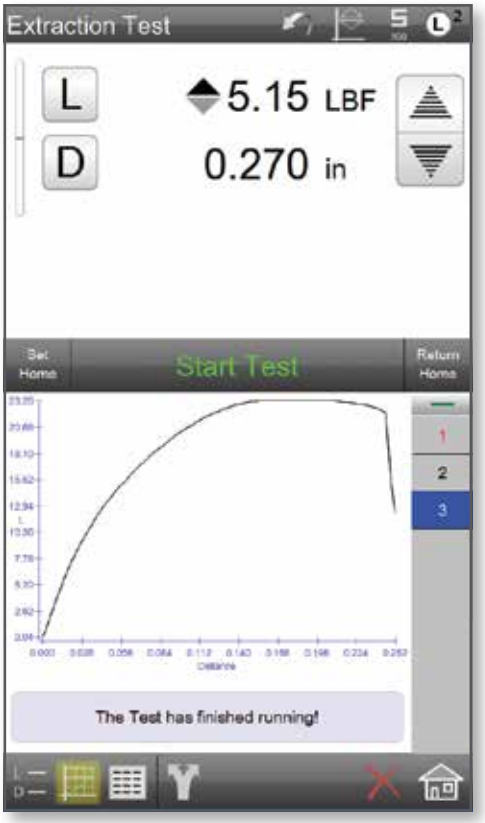

L2 systems display a graph profile. Unlike the L3 and L2 Plus systems, no measurement can be performed from the graph. Selecting the Graph symbol changes the graph axes. Graphs may be overlaid.

The Tolerance view shows the results and the tolerance limits. Test runs that are "out-of-tolerance" display in red with a tendency bar graph for analysis.

Systems

S2 Systems

When you need an easy-to-use measurement system for accurately and precisely determining spring rates, spring constants, spring lengths and other spring characteristics, S2 Systems are the solution. S2 Systems are ideal for high-volume production testing, quality control including incoming inspection verification and validation, and research and design engineering.

S2 Systems may be used for compression and extension springs with load ratings up to 11,000 lbf (50 kN, 5000 kgf). Our simple, fill-in-the-blank test setups let you test and validate your springs in as few as three steps allowing your testing to be performed in seconds. And your test results can be viewed, graphed and reported, including the ability to export results or raw data at rates up to 1000Hz.

Test Setup Options

Pre-Test Options

- Units of Measurement
- User Prompts to assist operator during testing
- Spring preconditioning (Scrag and Load Set Hold for duration)

Test Options

- Measure Free Length
- One Point Limit Test (Load or Height)
- Two Point Limit Test (Load and/or Height)
- Exceptions (Abort test if an exception is met)

Data Options

- Spring Constant (One Point)
- Spring Rate (Two Point)
- Date, User, Limit Setpoints

Post-Test Options

- Export Raw Data to a file location (up to 1000 samples/second)
- Export Results (Overwrite or Append data file)

Test Methods

- Spring Constant
- Spring Rate
- Initial Tension
- Free Length
- Load @ Height/Lengths
- Single Point
- Two Point
- Multiple Points
- Height/Length @ Loads
- Scragging and Load Hold Set

Perform one- and two-point testing to calculate spring constant and spring rate. Calculate free length and initial tension results for compression or extension springs.
Load measurement accuracies to better than 0.1% are achieved using our IEEE 1451.4 compliant load cell sensors. Capacities range from 1N to 50kN (100 gf to 11,250 lbf).

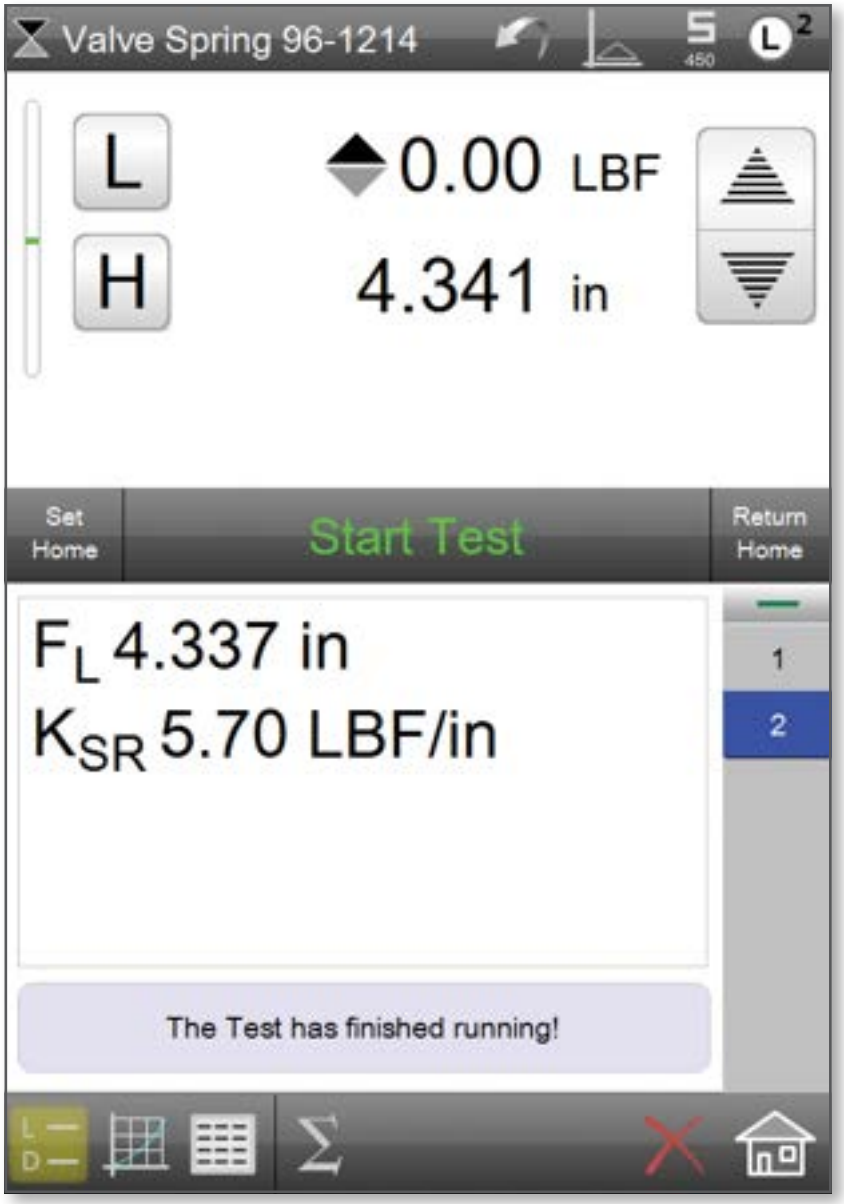

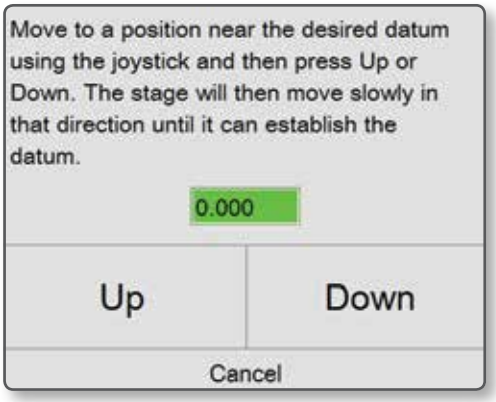

An automatic datuming feature helps to ensure accurate height/extension/elongation measurements. Heights can be measured to 0.001 inch (0.025 mm).

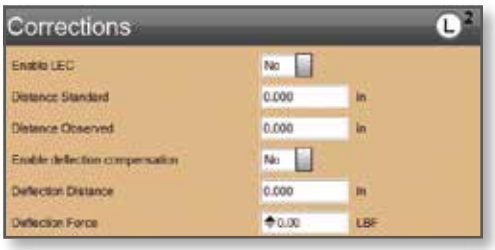

The deflection compensation feature is ideal for compressive testing where mechanical deflection can adversely effect measurement accuracy and repeatability.

Systems

S2 Systems

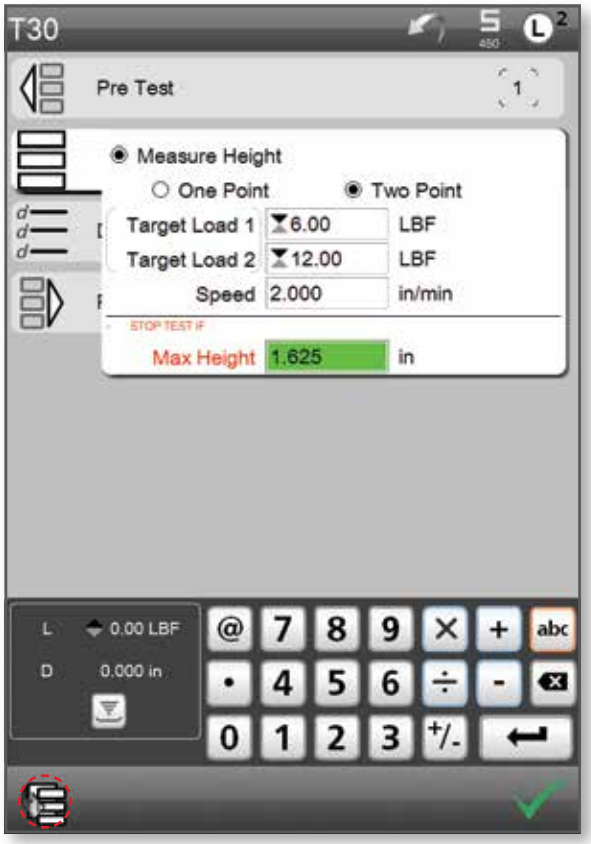

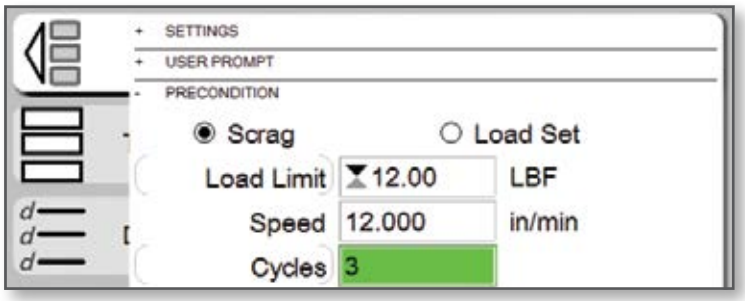

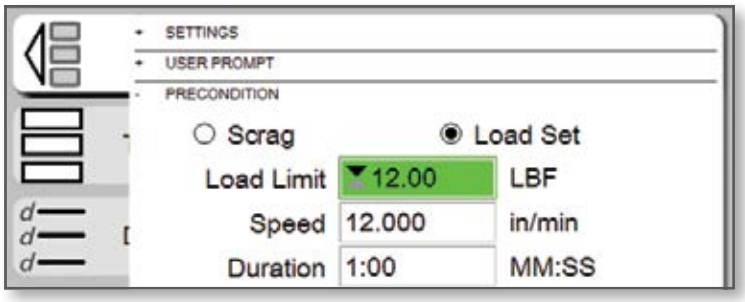

Preconditioning options include scragging and load set.
(Above) You can scrag your spring based on a number of cycles or based on a time duration.
(Below) Your spring may be set solid as a preconditioning prior to your actual test procedure. For example, compress to 12 lbf and hold for 1 minute.

Create compression and extension tests using the test templates supplied standard with your S2 system. Or, use the optional Test Builder application to create sophisticated, multi-point test setups for more advanced spring measurement.

The optional S2 Automation Builder software works with the S2 Test Builder application so you can use conditional branching and digital I/O to interface with ancillary equipment such as annunciators, conveyors and turret loading devices.

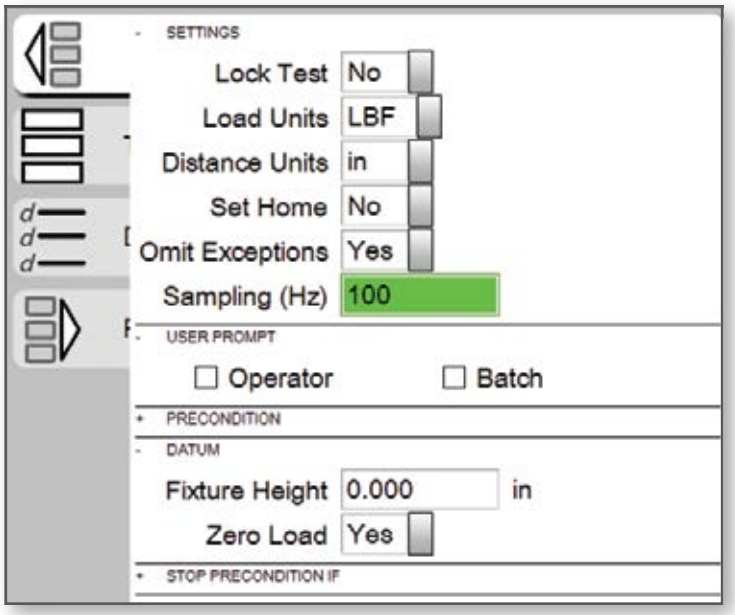

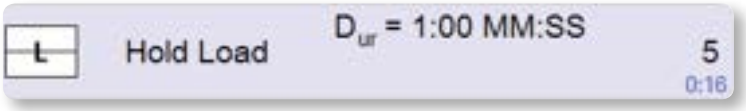

The Pre Test step lets you specify test attributes before you actually begin your testing. Set units of measure, pre-conditioning, user prompts and datum criterion.

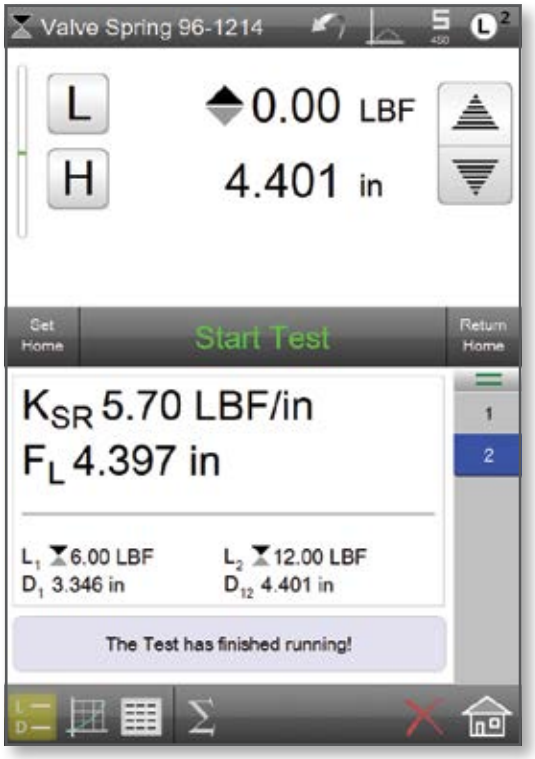

Upon completion of a test, you can display the key characteristics of your spring sample: Spring Rate, Free Length, and the individual measured results at your specified setpoint limits. The above display is for a 2-point compressive spring test.

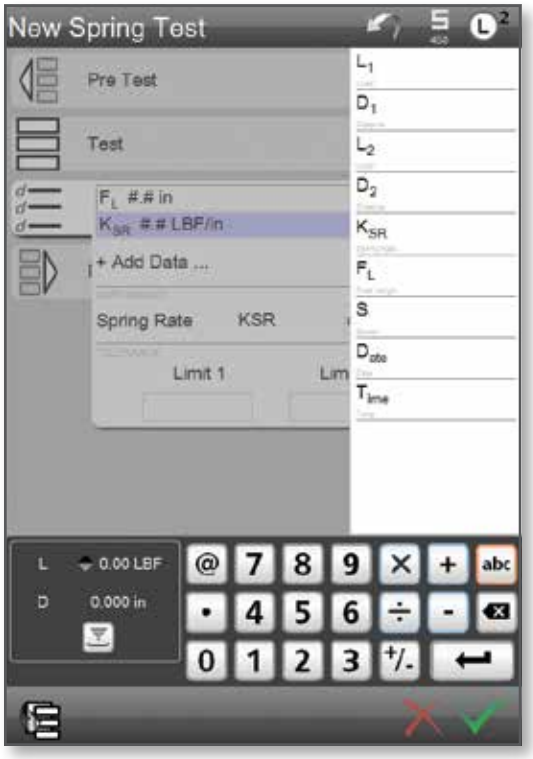

Using the spring test setup templates, you can select the results you want using the Data step. A list of available standard results are displayed and you select the result you want and how it is to be formatted on your result view.

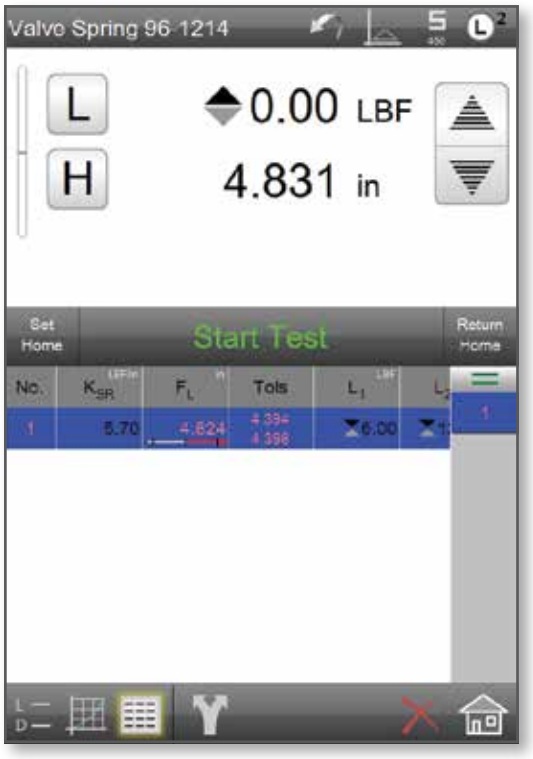

Like all Lx systems, within your S2 test, you may establish a tolerance on any result. Shown is an "out-of-tolerance" results for free length. The tolerance range is created between 4.394" and 4.398" in this example.

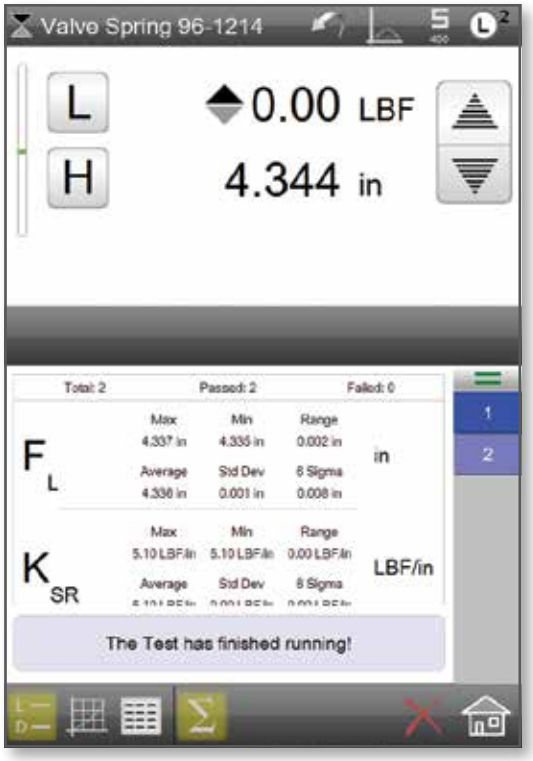

Your S2 software supports basic statistical process control. Individual results reported for your test can be compared statistically. You can view Mean, Min, Standard Deviation and Six Sigma for your selected results. When tolerance limits are used, you can summarize "pass and fail" results.

Automation

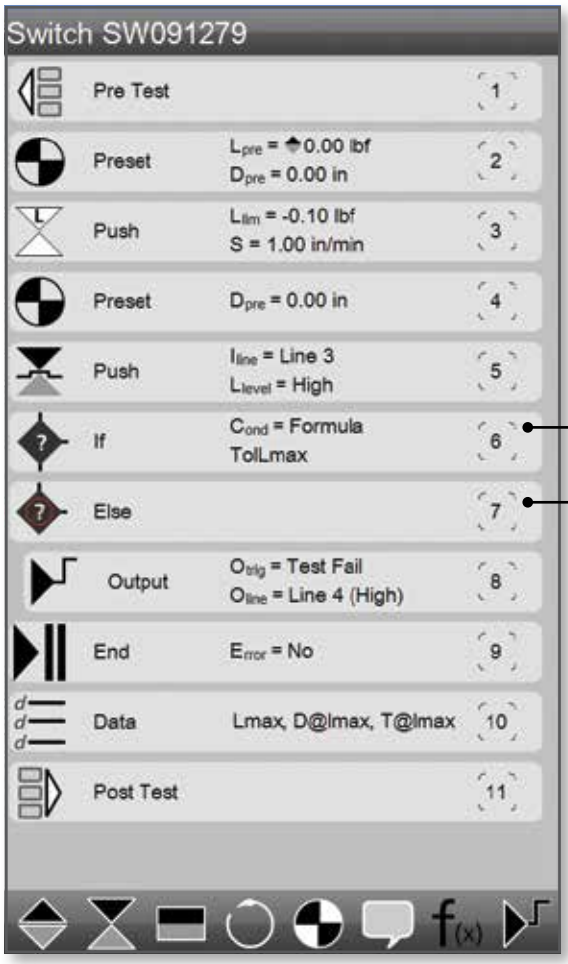

The Lx System can be interfaced with ancillary instrumentation for factory automation applications or where more advanced and complex measurements are necessary.

The optional Automation Builder software packages can be used for interfacing with instrumentation and equipment through digital and analog I/O signals.

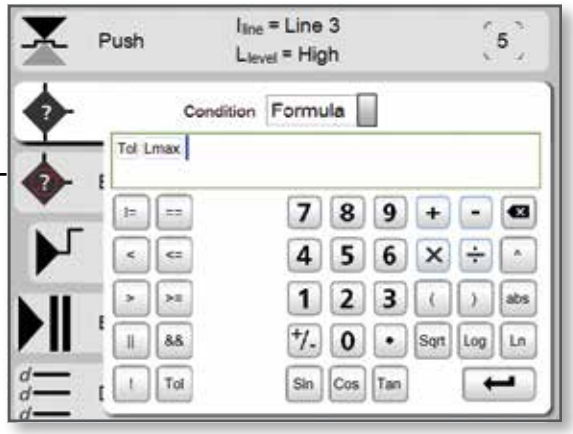

(Above) A conditional branching occurs when the Lmax result is out-of-tolerance. This will cause a message to display to the operator and it will cause a signal annunciator to light red for a failed test sample.

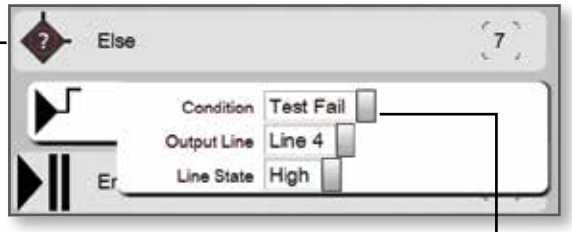

The Automation Builder can also be used to incorporate conditional logic within your test setup. Conditional logic can be used to establish If/Else relationships, including the ability to automatically adjust test setup functionality based on events that occur during a test run.

Digital I/O can be used for contact closure testing. You can measure and determine the precise load that caused the "make" or "break" in an electronic component or switch. You may also use conditional logic combined with the digital outputs to light an annunciator based on a tolerance result.

Digital I/O is available on all MMx and FMx test frames. Analog I/O is only available using the MMS or MMD test frames.

The Formula Builder allows you to construct complex, derived results using arithmetic, trigonometric and logarithmic expressions. The Formula Builder is standard in L3 systems and optional for L2 Plus, L2 and S2 systems. The Formula Builder for L2 and S2 systems supports basic arithmetic functions only- add, subtract, multiply and divide.

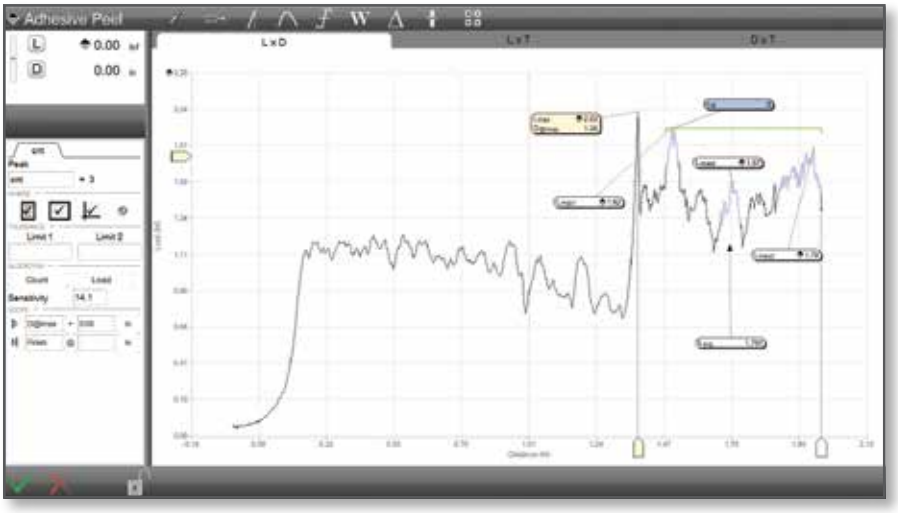

This example shows a full graph view of an adhesive test. Three peaks are identified based on the sensitivity of 14.1 after the Lmax (maximum peak).

The qualified peaks are highlighted in blue and identified as Lmax1, Lmax2 and Lmax3.

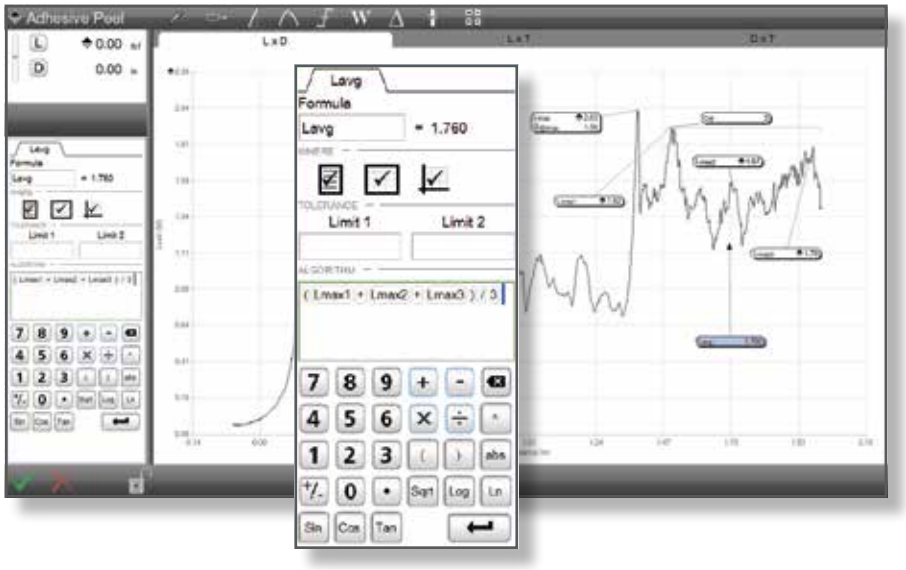

Using the Formula Builder, an expression was created that is an average of the three Lmax values only. The Lavg in this example application does not average all data points, but only the Lmax values.

The formula you create is evaluated real-time. Syntax errors are noted by displaying a red line around the formula input box. If the formula is correct, the line is green.

The functions and features available using the optional Automation Builder software are shown in the table.

The Formula Builder is supplied standard on L3 systems only.

Advanced mathematical expressions are not available with the Formula Builder in the L2 and S2 system's optional Automation Builder application.

Automation Builder Software Option				
Measurement Capabilities	**L3**	**L2 Plus**	**L2**	**S2**
Use Digital I/O	❍	❍	❍	❍
Use Analog I/O (requires MMx test frames)	❍	❍		
Use Command and Conditional Logic	❍	❍	❍	❍
Formula Builder				
Create Basic Expressions using Add, Subtract, Multiple and Divide	Std[1]	❍	❍	❍
Create Mathematical Expressions using Algebraic, Trigonometric and Logarithmic functions	Std[1]	❍		

Notes: (1) The Formula Builder function is supplied standard on L3 systems only. The Formula Builder is included in the optional Automation Builder software for L2 Plus, L2 and S2 systems.
Advanced mathematical expressions using algebraic, trigonometric and logarithmic functions are available on L3 and L2 Plus systems only.

Systems

L1 Systems

Starrett L1 Systems represent our most-basic, computer-based force testing solution. Optimized for production and quality control testing, they are designed to be easy to setup, operate and maintain.

L1 Systems can be used to perform a wide variety of testing methods including:

- Load Limit Testing
- Distance Limit Testing
- Break Limit Testing
- Cyclic Count Testing
- Cyclic Duration Testing
- Constant Load Testing
- Constant Distance Testing

Basic Architecture

Your Starrett L1 System is comprised of the following:

- FMM Digital Force Tester
- Base clevis adapter kit
- USB 2.0 communication cable
- BLC Load Cell Sensor
- Load cell mounting block
- 2-in1 Windows® 10 Tablet Computer
- Table computer to column mounting fixture
- L1 Application Software

Communication between the hardware is USB 2.0.

The 2-in-1 L1 tablet features a 10", high-resolution, touchscreen, color display with three USB 2.0 ports.

The L1 application software lets you create your test methods quickly using test templates that guide you through the test setup process. Create common test methods in seconds.

L1-550 system with FMM-550 test frame and L1 tablet and software. Test fixture and BLC load cell sensor are optional.

L1 Test Templates

The L1 System includes a set of common force measurement test templates. The templates have a common format consisting of these four test setup stages.

- Pre Test
- Test
- Data
- Post Test

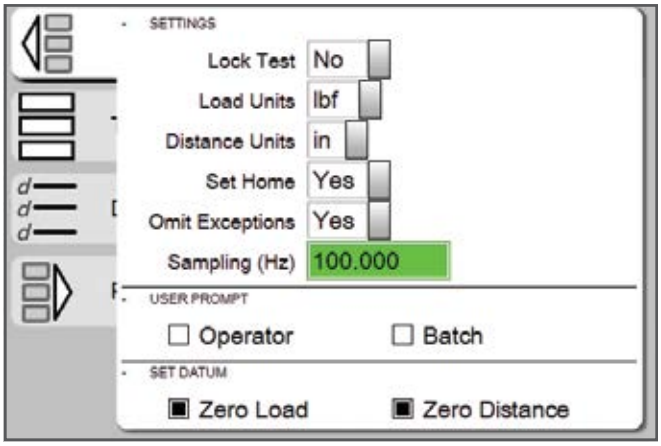

Pre Test Stage

The Pre Test stage supplies options you would perform prior to testing, for example, specifying the units needed to measure load and distance.

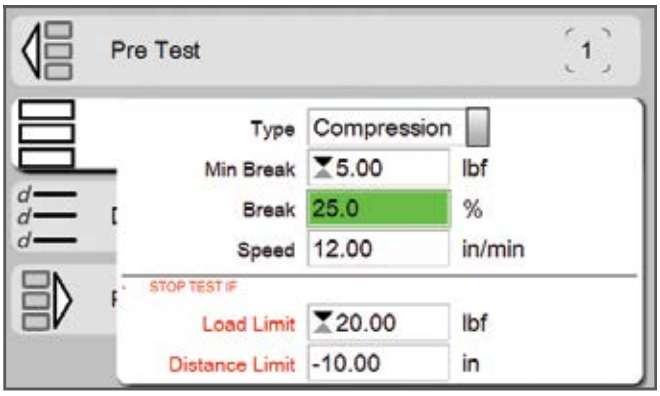

Test Stage

The Test stage is where you specify your testing requirements- what load you are using, what distance your crosshead will move, how fast your test speed is. Plus, you can easily add "exceptions". Exceptions are events that can be used to automatically stop your test, if they occur.

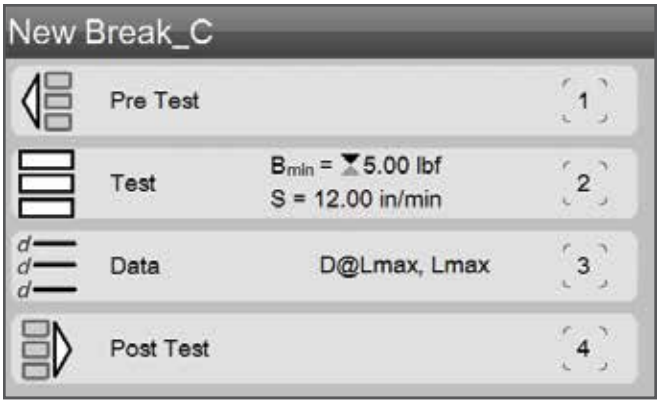

Test Setup Architecture

All test setups include four common, easy-to-understand, menu-guided stages: Pre Test, Test, Data and Post Test.

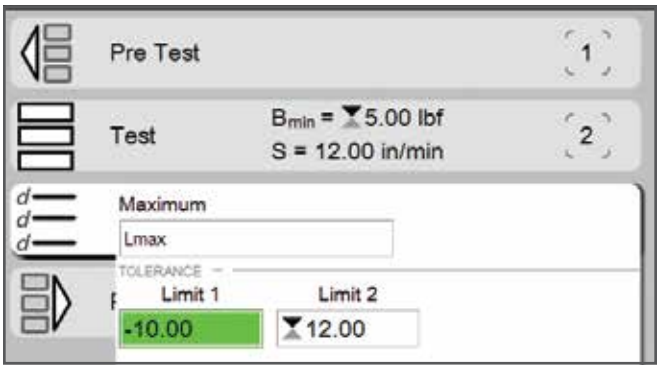

Data Stage

The Data stage is where you specify what results you want. For example, you can select Maximum Load, Distance @ Maximum Load, Distance @ Load Limit, Load @ Distance Limit and more. A list of values is displayed and you simply select the result you want. The Data stage is also where you can utilize tolerance limits for immediate "Pass/Fail" identification.

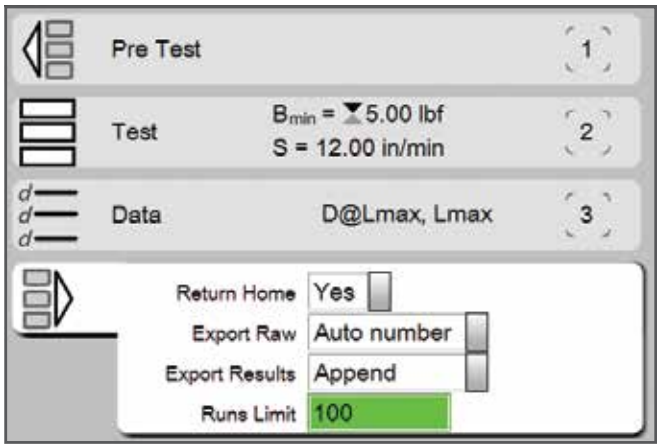

Post Test Stage

The Post Test stage lets you define what you want to do when the test concludes. You can export raw data or just the results and send to a network server. You can easily export directly to Microsoft® Excel® for custom report generation or analysis. Export information is saved as a .csv format for easy integration.

Systems

L1 Systems

When your L1 test method concludes, you can see the results you specified in your setup. Your L1 System will display results in these formats:

- Results View
- Graph View
- Data View
- Tolerance View
- Statistics View

Results View

Your results are displayed in a large, easy-to-read format organized for quick interpretation. The result and associated units of measure are displayed. During testing the active load and distance measurement is displayed. The crosshead speed and direction of travel is also displayed so the operator is aware of the current test status.

Graph View

Load, Distance and Time can be used to view the data points used for your test. You may sample at rates up to 1000Hz and display your graph profile for your test. You can select a point on the graph and see the associated load, distance and time. You can also overlay multiple graphs to make graphical comparisons.

Data View

Results can be displayed in a tabular format. This is ideal for a quick comparison of each test in a batch of tests performed throughout the shift or day. You can export directly from the Data view to Microsoft® Excel®.

Tolerance View

When tolerance limits are used for "Pass/Fail" analysis, you can see your tolerance limits compared to actual results. You also see "Pass" or "Fail". Failed results are displayed in red text. And we supply a deviation bar graph that shows where your results measured compared to your tolerance limits.

Statistics View

Common statistics such as mean, maximum, minimum, standard deviation and six sigma may be displayed for all test results.

Your Test Name is displayed as well as the type of test: compression or tension.

When the test concludes, your L1 software shows your results in numerical and graphical formats. Essential measurements are displayed an easy-to-interpret formats. You can Start and Stop a test using the touchscreen display; manually set the home position and return the crosshead to home position, an zero your load (L) and distance (D) measurements.

Compare the graphical results of multiple tests that you select. Individual graphs are color-codes and referenced to the test in the Runs List. You can also retrieve archived tests for making a graphical comparison. For example, you can compare a "benchmark" result from a year ago to a current result.

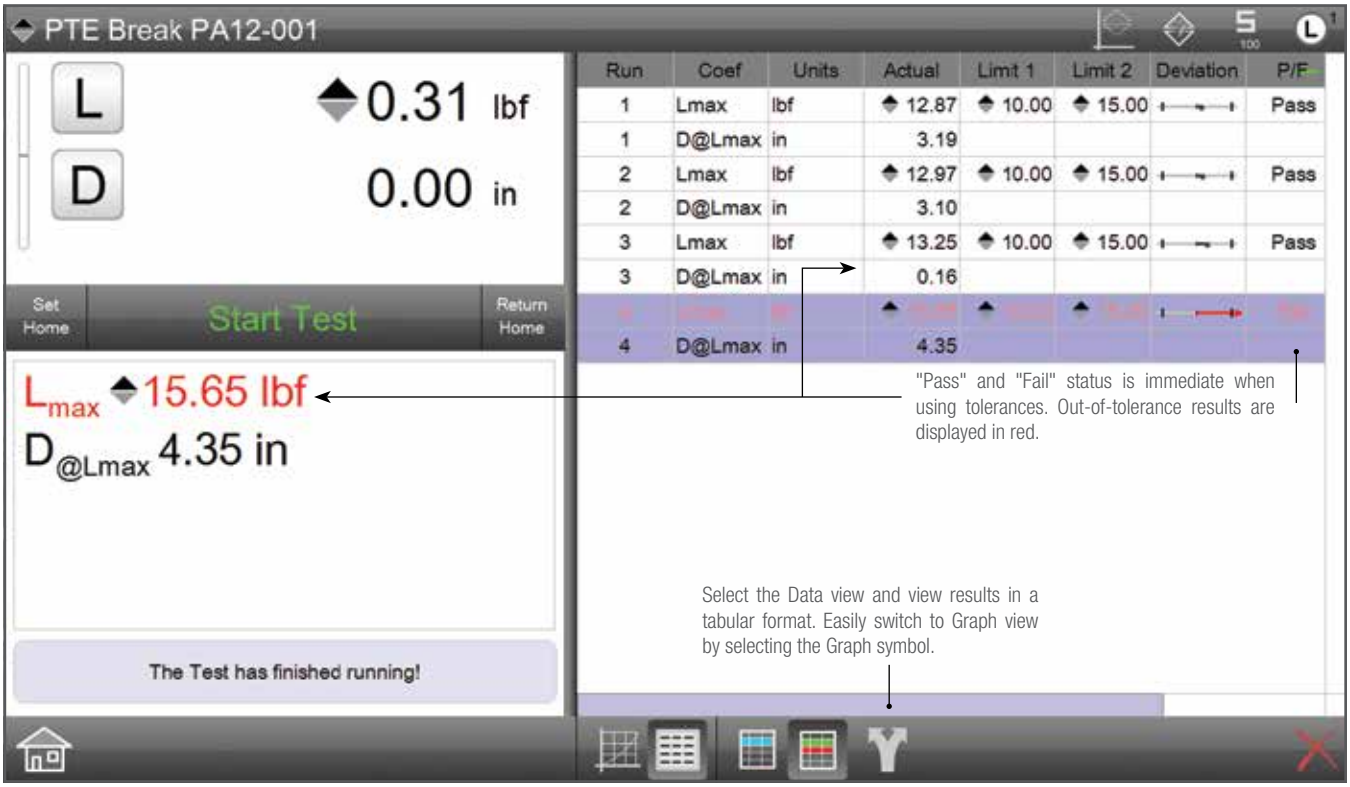

Display results in a tabular format complete with your tolerance limits. Test results that are out-of-tolerance are prominently displayed in red. Out-of-tolerance results are identified in the table, large results view and on the graph view in the Runs List. You can also display statistics on selected test runs. Calculate and display Minimum, Maximum, Mean and Standard Deviation with a single click.

Software Comparisons

Lx Systems

Lx System Product Comparisons and Capabilities					
Target Applications	**L3**	**L2 Plus**	**L2**	**S2**	**L1**
Use for Stress, Strain and Material Testing applications	❍				
Use for Advanced Load, Distance and Force Analysis applications	❍	❍			
Use for Basic Load, Distance and Force Measurement applications	❍	❍	❍		❍
Use for Advanced Extension and Compression Spring applications	❍	❍			
Use for Basic Extension and Compression Spring applications				❍	
User Interface					
All-In-On Computer Workstation, Windows® OS	❍	❍			
Tablet Computer, Windows® OS			❍	❍	❍
Software Applications					
Test Builder	❍	❍	❍	✪	
Force Quick Test Templates			❍		❍
Spring Quick Test Templates				❍	
Formula Builder	❍	✪	✪	✪	
Automation Builder	✪	✪	✪	✪	
Measurement Methodology					
Measure results using the graph	❍	❍			
Measure results using a List of Value menu	❍	❍	❍	❍	
Create Test Setups using Graphical Test Methods (No programming)	❍	❍	❍	❑	
Create Test Setups using Quick-Test Templates			❍	❍	❍
Test Methods					
Tensile Testing, Load, Distance, Break, Rate	❍	❍	❍	❑	❍
Compression Testing, Load, Distance, Break, Rate	❍	❍	❍	❑	❍
Hold Testing, Load, Distance for Duration or Event	❍	❍	❍	❑	❍
Cyclic Testing for Duration, Count, Loop or Event	❍	❍	❍	❑	❍
Shear Testing	❍	❍			
Flexural Testing	❍	❍			
Peel Testing	❍	❍			
Coefficient of Friction Testing	❍	❍			
Spring Testing	❍	❍		❍	
Measurement Capabilities					
Measure Stress, Strain, Elongation, Strengths	❍				
Measure Offset Yield	❍				
Measure Modulus (Elastic, Chord, Tangent)	❍				
Measure Strain and Elongation using Extensometer(s) (requires MMx test frames)	❍				
Measure Energy, Work, Resilience	❍	❍			
Create Mathematical Expressions using Algebraic, Trigonometric and Logarithmic functions	❍	▷			
Create Basic Expressions using Add, Subtract, Multiple and Divide	❍	▷	▷	▷	
Use Digital I/O	▷	▷	▷	▷	
Use Analog I/O (requires MMx test frames)	▷	▷			
Use Command and Conditional Logic	▷	▷	▷	▷	
Measure Load, Distance, Time	❍	❍	❍	❍	❍
Measure Minimum, Maximum and Averages	❍	❍	❍	❍	❍
Measure Slopes and Intersections	❍	❍			
Measure Peaks, Valleys, Counts, Averages	❍	❍			
Measure Break, Rupture	❍	❍	❍	❒	❍
Measure Delta between results within a test	❍	❍	❍		
Measure results within multiple test runs simultaneously (multiview)	❍	❍			
Measure Spring Rate, Spring Constant	❍	❍		❍	
Reporting and Exporting Data					
Print using standard reports, graph, batch, tolerance, statistics	❍	❍	❍	❍	❍
Export results/data in .csv for custom reporting	❍	❍	❍	❍	❍
Export results/data in .csv for integration with SPC software	❍	❍	❍	❍	❍
Include tolerances on any result	❍	❍	❍	❍	❍

Note: FMM frames run L1 software only
L3, L2 Plus, L2 and S2 software require a FMS, MMS, FMD or MMD frame

❍ = Standard
✪ = Optional
❑ = Requires Test Builder application
▷ = Requires Automation Builder application

Digital Force Testers

FMM Digital Force Testers

FMM Digital Force Testers may be used with L1 software or with a Starrett DFC or DFG digital force gage. FMM digital force testers are compact and ideal for high-volume, lean manufacturing production.

FMM testers are available in three capacities: 110lbf (500N), 330lbf (1500N) and 550lbf (2500N). Two travel lengths are available for all capacities: standard travel at 20" (508mm) and extended travel at 30" (762mm). Crosshead speeds are controlled locally and can be set from 0.002 to 40 inch/min (0.05 to 1016mm/min). A high-resolution OLED display shows distance measurements with accuracy better than 20µm (0.0008 inch). Travel limits help prevent load sensor overloading.

The FMM force tester can be controlled using L1 software for limit, cycling, hold and coefficient of friction testing.

The FMM force tester can also be controlled using a DFC digital force gage. The DFC force gage serves as a universal controller where it is used to setup the force tester's distance limits, crosshead direction and crosshead velocity for a test.

Features

- Ideal for tension, compression, flexural, cyclic, shear, and friction applications
- Use with L1 software and 2-in-1 tablet PC or with DFC and DFG force gages
- Multiple, Easy-to-Use Operating Modes
  - Manual
  - Automatic
  - Continuous
  - Gage Control (DFC force gage controls FMM tester)
  - Software Control (L1 system control)

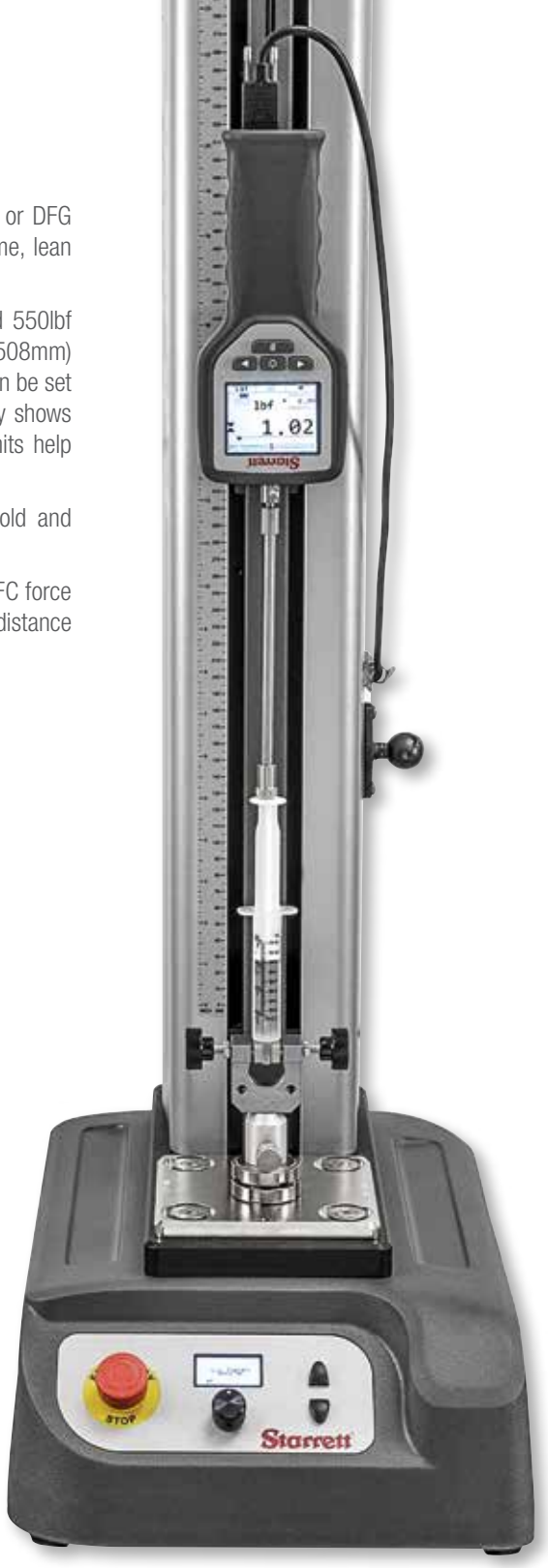

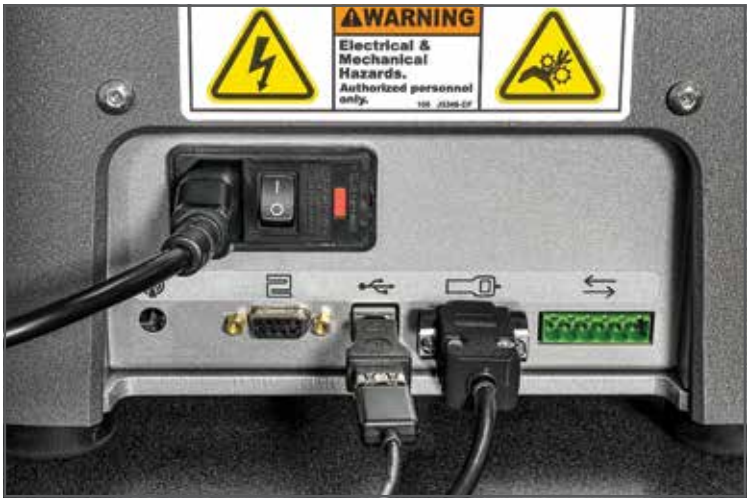

Interface connections and communications are clearly shown on the back panel.

Source power may be 100-240V- no jumpers required or configuration needed.

Digital Force Testers

Features

- Crosshead position accuracy is better than 20µm (0.0008 in)
- Two column heights and travels:
  - Standard Travel 20" (508mm
  - Extended Travel 30" (762mm)
- Three force capacities:
  - 110 lbf (500N)
  - 330 lbf (1500N)
  - 550 lbf (2500N)
- Reference distance travel ruler
- Cycle for 99,999 counts or seconds (72 hours)
- Hold at load or duration for up to seconds (72 hours)
- Compact design is ideal for small work space and for lean manufacturing environments
- Adjustable base adapter ensure correct sample alignment
- Standard metric base with M4, M6, M10 and M12 threads
- Optional imperial base with #10-32, 5/16-18, 1/4-28 and 1/2-20 threads
- USB 2.0 and RS-232 Communications
- Configurable crosshead speeds from:
  - 0.002 to 40 in/min
  - 0.05 to 1000 mm/min
- Crosshead speed accuracy is better than 0.1% at full speed, full load
- Adjustable, magnetic travel limits
- Quiet operating even at full speed, full load
- Easily upgrade from force gage control to computer-based operation using L1 software and 2-in-1 tablet PC
- Two mounting blocks for:
  - Force gage mounting
  - BLC load cell mounting
- Four configurable 0-24Vdc digital I/O channels for switch testing or use with annunciators and status lamps
- Base clevis adapter kit supplied standard
- Cast-aluminum base with bench clips to secure to work space if needed
- Easy-to-use jog keys with excellent tactile feedback
- Speed selection dial with high resolution display

Digital Force Testers

FOR USE WITH L1 SOFTWARE AND DIGITAL FORCE GAGES

Specifications

FMM - Digital Force Testers

		Standard Travel			Extended Travel		
Models		**FMM-110**	**FMM-330**	**FMM-550**	**FMM-110X**	**FMM-330X**	**FMM-550X**
Load Capacity, Full Scale	Lbf	110	330	550	110	330	550
	N	500	1500	2500	500	1500	2500
	Kgf	50	150	250	50	150	250
Crosshead Speed, Minimum	inch/min	0.002					
	mm/min	0.05					
Crosshead Speed, Maximum	inch/min	40					
	mm/min	1000					
Maximum Speed, Full Load	inch/min	40					
	mm/min	1000					
Accuracy- Speed		Better than 0.1% of test speed					
Accuracy- Crosshead Position	inch	Better than 0.0008					
	mm	Better than 0.02mm					
Travel Resolution	inch	0.001					
	mm	0.025					
Axial Frame Stiffness	lbf/in	13,750	17,368	17,742	12,222	13,750	14,865
	kN/mm	2.5	3.1	3.1	2.2	2.5	2.5
Cycling, Maximum	Counts	99,999					
	Duration	27 hours					
Constant Hold, Maximum	Duration	27 hours					
Vertical Test Space[1]	inch	22			32		
	mm	559			813		
Crosshead Travel	inch	20			30		
	mm	508			762		
Communication		USB 2.0, RS-232,					
Input/Output Channels		0 - 24Vdc (independent, configurable)					
Power		Single Phase Voltage (Vac) +10% 110, 120, 220, 230, 240 50/60 Hz					
Using 117V Mains at Full Scale Load		0.09A Holding	0.11A Holding	0.18A Holding	0.09A Holding	0.11A Holding	0.18A Holding
		10.5 Watts	12,9 Watts	21.1 Watts	10.5 Watts	12,9 Watts	21.1 Watts
Operating Temperature	°F	+40 to +110					
	°C	+5 to +43					
Humidity		10 to 90%, non-condensing					
Throat	inch	3.9					
	mm	100					
Height	inch	37			47		
	mm	940			1194		
Width	inch	11.5					
	mm	292					
Depth	inch	16.5					
	mm	419					
Base Plate Threads	inch	#10-32, 5/16-18, 1/4-28, 1/2-20 (optional)					
	mm	M4, M6, M10, M12 (standard)					
Weight (approx.)	lbs	80			95		
	kgs	36.3			43		
CE Compliance		Meets all relevant CE standards for safety, immunity, noise					

NOTES
Total vertical space is the distance from the top surface of the base plate to the bottom surface of the crosshead.

The standard base plate features four hole patterns for mounting fixtures; M4, M6, M10 and M12. An optional imperial base plate features #10-32, 5/16-18, 1/4-28, and 1/2-20. The base plate can be easily positioned to ensure correct sample alignment.

Two mounting blocks are available for attaching a Starrett force gage or the BLC Series load cell. The blocks attach easily and securely to the crosshead and ensure correct center line alignment.

A stainless steel clevis set is included with the FMM test frame base. The clevis will accept 15.9mm diameter test fixtures. The clevis set includes the clevis, locking rings, grip pin and a spanner wrench.

Material Test Frames

FOR USE WITH L3 SOFTWARE

Specifications

MMx Material Testing Frames								
Model No.		**MMS-500**	**MMS-1000**	**MMS-2500**	**MMS-5000**	**MMD-10K**	**MMD-30K**	**MMD-50K**
Load Capacity	N	500	1000	2500	5000	10,000	30,000	50,000
	kgf	50	100	250	500	1000	3000	5000
	lbf	112	225	562	1124	2250	6750	11,250
Minimum Speed	mm/min	0.001	0.001	0.001	0.001	0.001	0.001	0.001
	in/min	0.00004	0.00004	0.00004	0.00004	0.00004	0.00004	0.00004
Maximum Speed	mm/min	1525	1525	1525	1525	1525	1525	752
	in/min	60	60	60	60	60	60	30
Position Control Resolution	µm	0.0625	0.0625	0.0625	0.0625	0.05	0.025	0.025
	µin	2.4	2.4	2.4	2.4	1.9	0.9	0.9
Vertical Test Space[1]	mm	559	953	1257	1257	1270	1245	1220
	in	22	37.5	49.5	49.5	50	49	48
Total Crosshead Travel	mm	381	762	1016	1016	1162	1137	1111
	in	15	30	40	40	45.75	44.75	43.75
Throat	mm	100	100	100	100	424	424	424
	in	4	4	4	4	16.7	16.7	16.7
Accuracy Load Measurement		Load Cell Sensor Dependent				Load Cell Sensor Dependent		
Accuracy Position Measurement[2]		±0.0002 inch (±5 µm)				±0.0002 inch (±5 µm)		
Accuracy Strain Measurement		±0.5% of reading down to 1/50 of full scale with ASTM E83 class B or ISO 9513 class 0.5 extensometer				±0.5% of reading down to 1/50 of full scale with ASTM E83 class B or ISO 9513 class 0.5 extensometer		
Accuracy Crosshead Speed		±0.1% of set speed				±0.1% of set speed		
Data Sampling	Hz	1 to 2000				1 to 2000		
Digital I/O		8 channels @ 1-5V				8 channels @ 1-5V		
Extensometer Connections		2 channels for 0-10V extensometers				2 channels for 0-10V extensometers		
Analog Inputs		1 channel @ ±10V				1 channel @ ±10V		
Analog Outputs		2 channels @ 0-10V				2 channels @ 0-10V		
Electrical Phase		1				1		
Power Requirements		100, 120, 220, 230, 240VAC 10%; 47-63Hz Self-identifying				100, 120, 220, 230, 240Vac 10%	Single Phase Voltage (Vac) ±10% 220-240V	Single Phase Voltage (Vac) ±10% 220-240V
Operating Temperature	°C	+5° to +40°C				+5° to +40°C		
	°F	+41° to 104°F				+41° to 104°F		
Storage Temperature	°C	-40° to +66°C				-40° to +66°C		
	°F	-40° to 150°F				-40° to 150°F		
Humidity		+10% to +90%, non-condensing				+10% to +90%, non-condensing		
Total Height	mm	805	1218	1573	1573	1685	1711	1711
	in	31.7	47.9	61.9	61.9	66.4	67.4	67.4
Total Width	mm	381	381	381	381	787	787	787
	in	15	15	15	15	31	31	31
Total Depth	mm	514	514	514	514	724	724	724
	in	20.3	20.3	20.3	20.3	28.5	28.5	28.5
Weight	kg	61	77	88	88	136	192	225
	lb	135	170	195	195	300	425	500

Notes

Total vertical space is the distance from the top surface of the base plate to the bottom surface of the crosshead, excluding load cell sensor, test fixtures, and clevis adapter.
Assumes Linear Error Correction and Deflection Compensation has been performed on test frame.

MMS and MMD test frames may be used with extensometers from Reliant Technologies and Epsilon Technology Corporation. Extensometers can be "plug and play" when specified for Starrett equipment.

Force Measurement Test Frames

FOR USE WITH L3, L2 PLUS, L2 AND S2 SOFTWARE

Specifications

FMx Force Measurement Frames								
Model No.		**FMS-500**	**FMS-1000**	**FMS-2500**	**FMS-5000**	**FMD-10K**	**FMD-30K**	**FMD-50K**
Load Capacity	N	500	1000	2500	5000	10,000	30,000	50,000
	kgf	50	100	250	500	1000	3000	5000
	lbf	112	225	562	1124	2250	6750	11,250
Minimum Speed	mm/min	0.05	0.05	0.05	0.05	0.001	0.001	0.001
	in/min	0.002	0.002	0.002	0.002	0.00004	0.00004	0.00004
Maximum Speed	mm/min	1525	1525	1525	1525	1525	1525	752
	in/min	60	60	60	60	60	60	30
Position Control Resolution	µm	0.250	0.250	0.250	0.250	0.05	0.025	0.025
	µin	9.8	9.8	9.8	9.8	1.9	0.9	0.9
Vertical Test Space[1]	mm	559	953	1257	1257	1270	1245	1220
	in	22	37.5	49.5	49.5	50	49	48
Total Crosshead Travel	mm	381	762	1016	1016	1162	1137	1111
	in	15	30	40	40	45.75	44.75	43.75
Throat	mm	100	100	100	100	424	424	424
	in	4	4	4	4	16.7	16.7	16.7
Accuracy Load Measurement		Load Cell Sensor Dependent				Load Cell Sensor Dependent		
Accuracy Position Measurement[2]		±0.001inch (±20µm)				±0.0002inch (±5µm)		
Accuracy Crosshead Speed		±0.1% of set speed				±0.1% of set speed		
Data Sampling	Hz	5 to 1000				5 to 1000		
Digital I/O		8 channels @ 1-5V				8 channels @ 1-5V		
Electrical Phase		1				1		
Power Requirements		100, 120, 220, 230, 240VAC 10%; 47-63Hz Self-identifying				100, 120, 220, 230, 240Vac 10%	Single Phase Voltage (Vac) ±10% 220-240V	Single Phase Voltage (Vac) ±10% 220-240V
Operating Temperature	°C	+10° to +38°C				+10° to +38°C		
	°F	+50° to 100°F				+50° to 100°F		
StorageTemperature	°C	-40° to +66°C				-40° to +66°C		
	°F	-40° to 150°F				-40° to 150°F		
Humidity		+10% to +90%, non-condensing				+10% to +90%, non-condensing		
Total Height	mm	805	1218	1573	1573	1685	1711	1711
	in	31.7	47.9	61.9	61.9	66.4	67.4	67.4
Total Width	mm	381	381	381	381	787	787	787
	in	15	15	15	15	31	31	31
Total Depth	mm	514	514	514	514	724	724	724
	in	20.3	20.3	20.3	20.3	28.5	28.5	28.5
Weight	kg	61	77	88	88	136	192	225
	lb	135	170	195	195	300	425	500

Notes

Total vertical space is the distance from the top surface of the base plate to the bottom surface of the crosshead, excluding load cell sensor, test fixtures, and clevis adapter.

Assumes Linear Error Correction and Deflection Compensation has been performed on test frame.

Shown: L2 system with FMS500 test frame with tablet.

Test Frame Dimensions

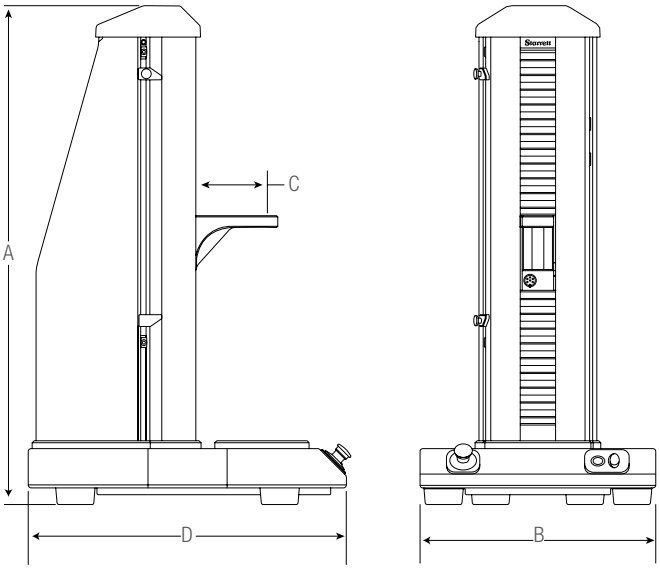

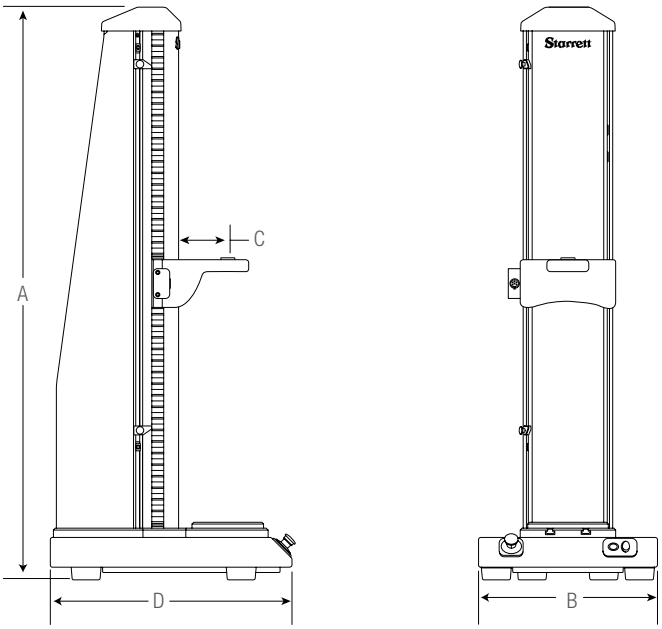

Single Column Test Frames	A		B		C		D	
Model	in	mm	in	mm	in	mm	in	mm
MMS/FMS-500 Test Frame	31.7	805	15.0	381	4.2	107	20.3	514

Single Column Test Frames	A		B		C		D	
Model	in	mm	in	mm	in	mm	in	mm
MMS/FMS-1000 Test Frame	47.9	1218	15	381	4.1	105	20.3	514
MMS/FMS-2500 Test Frame	61.9	1573	15	381	4.1	105	20.3	514
MMS/FMS-5000 Test Frame	61.9	1573	15	381	4.1	105	20.3	514

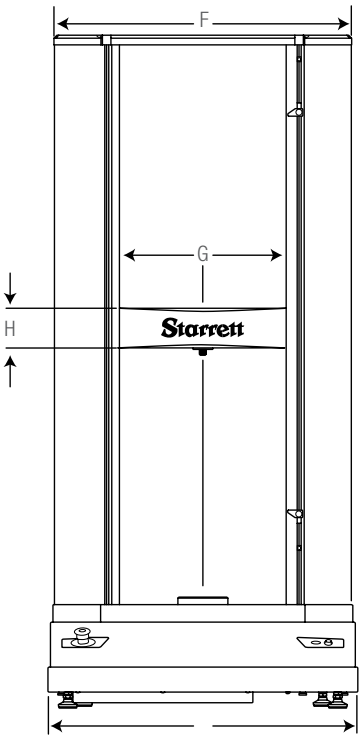

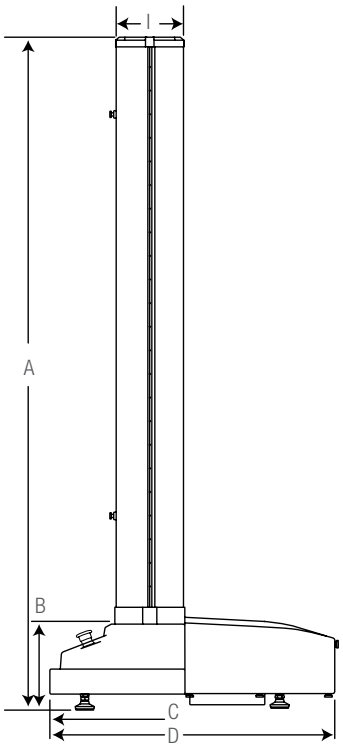

Dual Column Test Frames	A		B		C		D		E		F		G		H		I	
Model	in	mm	in	mm	in	mm	in	mm	in	mm	in	mm	in	mm	in	mm	in	mm
MMD/FMD-10K Test Frame	66.4	1685	9.4	238	10	254	28.5	724	31	787	29.7	754	16.7	424	3	76	6.7	170
MMD/FMD-30K Test Frame	67.4	1711	10.4	263	10	254	28.5	724	31	787	29.7	754	16.7	424	4	102	6.7	170
MMD/FMD-50K Test Frame	67.4	1711	10.4	263	10	254	28.5	724	31	787	29.7	754	16.7	424	5	127	6.7	170

Test Frame Dimensions

FMM Standard Travel

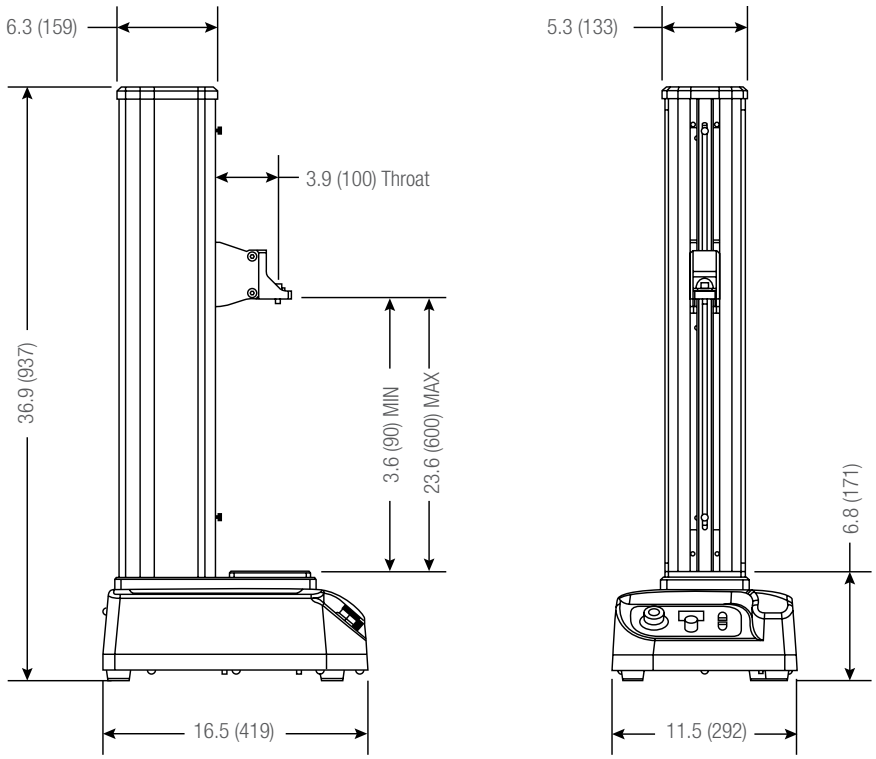

FMM Extended Travel

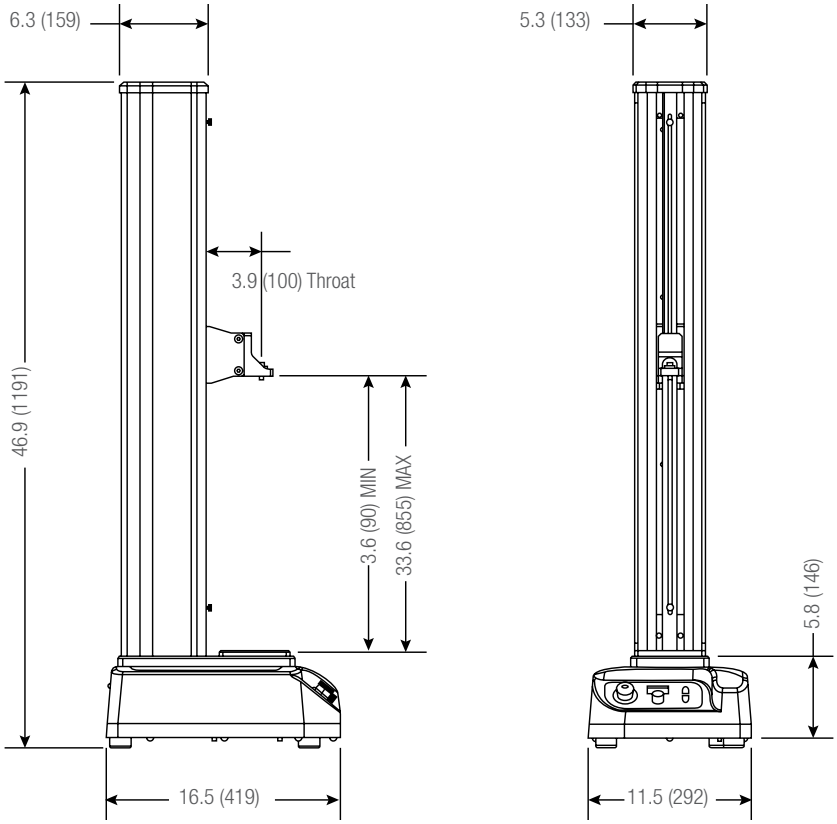

Load Cell Sensors

Offering a full range of precision load cell sensors for material testing, force analysis and force measurement applications. Starrett load cells are compliant with IEEE 1451.4 and meet or exceed ASTM E4, BS 1610, ISO 7500-1 and EN 10002-2.

Measurement accuracies of ±0.05% of reading down to 1/100 of sensor capacity may be achieved. Sensors are supplied with a NIST-traceable Certificate of Calibration. Starrett recommends on-site verification of accuracy during installation. Sensor calibration should be performed at least annually.

MLC-500

MLC Load Cell Sensors

The MLC Load Cell Sensor is a full-bridge, temperature compensated, strain gage instruments designed and optimized for material testing applications. These low profile sensors feature high axial stiffness and minimal deflection at full capacity which leads to improved measurement accuracy.

The MLC Sensors are general purpose sensors available in capacities from 125N to 50kN.

MLC Low Profile Sensors

	Load Capacity			Safe Overload	Full Scale Deflection		Height[1]		Width		Thread
Model No.	N	KGF	LBF	% Full Scale	in	mm	in	mm	in	mm	mm
MLC-125	125	13	28	150	0.003	0.08	1.5	38.1	2.75	69.8	M6 x 1-6H
MLC-250	250	25	56	150	0.003	0.08	1.5	38.1	2.75	69.8	M6 x 1-6H
MLC-500	500	50	112	150	0.003	0.08	1.5	38.1	2.75	69.8	M6 x 1-6H
MLC-1000	1,000	100	225	150	0.003	0.08	1.5	38.1	2.75	69.8	M6 x 1-6H
MLC-1500	1,500	150	337	150	0.001	0.03	2.51	63.51	4.13	104.8	M16 x 2-4H
MLC-2500	2,500	250	562	150	0.001	0.03	2.51	63.51	4.13	104.8	M16 x 2-4H
MLC-5K	5,000	500	1,124	150	0.001	0.03	2.51	63.51	4.13	104.8	M16 x 2-4H
MLC-10K	10,000	1,000	2,248	150	0.001	0.03	2.51	63.51	4.13	104.8	M16 x 2-4H
MLC-25K	25,000	2,500	5,620	150	0.002	0.05	2.51	63.51	4.13	104.8	M16 x 2-4H
MLC-50K	50,000	5,000	11,250	150	0.002	0.05	2.51	63.51	4.13	104.8	M16 x 2-4H

NOTES

1. Dimension includes the base adapter. These MLC sensors are supplied with the base adapter standard. Base adapters are recommended for any MLC sensor. Load measurement accuracy is ±0.05% of reading down to 1/100 of load cell capacity. Display resolution is 10,000:1.
2. For FMS, MMS, FMD or MMD frames.

BLC Load Cell Sensors

BLC load cell sensors are full-bridge, temperature compensated, strain gage instruments designed and optimized for basic force testing applications. These S-beam sensors feature high axial stiffness and minimal deflection at full capacity which leads to improved measurement accuracy.

The BLC sensors are general purpose sensors available in capacities from 2lbf to 500lbf (10 to 2500N). These sensors are used exclusively with L1 Systems.

BLC - Basic Force Measurement S-beam Sensors

	Load Capacity			Safe Overload	Full Scale Deflection		Height		Width		Thread
Model Number	N	KGF	LBF	% Full Scale	in	mm	in	mm	in	mm	mm
BLC-2	10	1	2	150	0.009	0.22	3.0	76.2	3.0	76.2	M6 x 1-6H
BLC-5	20	2	5	150	0.008	0.21	3.0	76.2	3.0	76.2	M6 x 1-6H
BLC-10	50	5	10	150	0.007	0.18	3.0	76.2	3.0	76.2	M6 x 1-6H
BLC-20	100	10	20	150	0.007	0.18	2.0	50.8	2.0	50.8	M6 x 1-6H
BLC-50	250	25	50	150	0.006	0.15	2.0	50.8	2.0	50.8	M6 x 1-6H
BLC-100	500	50	110	150	0.003	0.08	2.0	50.8	2.0	50.8	M6 x 1-6H
BLC-200	1000	100	225	150	0.003	0.08	2.0	50.8	2.0	50.8	M6 x 1-6H
BLC-500	2500	250	550	150	0.005	0.13	2.0	50.8	2.0	50.8	M12 x 1.75-5H

NOTES

1. Load measurement accuracy is ±0.1% of load cell capacity. Display resolution is 10,000:1.
2. For FMM frames.

Load Cell Sensors

FLC Load Cell Sensors

Three models of s-beam load cell sensors are also available. These are all full bridge, temperature compensated strain gage instruments, designed for force measurement applications, but suitable for some material testing applications.

FLC-500E

FLC-100P

Premium Models

Ideal for low load applications, these sensors have a safe overload rating of 1000% of the sensor's load capacity.

FLC-P "Premium" S-beam Sensors

	Load Capacity			Safe Overload	Full Scale Deflection		Height		Width		Thread
Model No.	N	KGF	LBF	% Full Scale	in	mm	in	mm	in	mm	mm
FLC-5P	5	0.5	1	1000	0.014	0.4	2.48	63.0	2.33	59.2	M6 x 1-6H
FLC-10P	10	1	2	1000	0.012	0.3	2.48	63.0	2.33	59.2	M6 x 1-6H
FLC-25P	25	2.5	5	1000	0.012	0.3	2.48	63.0	2.33	59.2	M6 x 1-6H
FLC-50P	50	5	11	1000	0.009	0.2	2.48	63.0	2.33	59.2	M6 x 1-6H
FLC-100P	100	10	22	1000	0.009	0.2	2.48	63.0	2.33	59.2	M6 x 1-6H
FLC-250P	250	25	56	1000	0.009	0.2	2.48	63.0	2.33	59.2	M6 x 1-6H

NOTES
1. Load measurement accuracy is ±0.1% of load cell capacity. Display resolution is 10,000:1.
2. For FMS, MMS, FMD or MMD frames.

Sealed Models

These models are suitable for applications in non-laboratory environments where dirt, oil, dust and debris may be present.

FLC "Sealed" S-beam Sensors

	Load Capacity			Safe Overload	Full Scale Deflection		Height		Width		Thread
Model No.	N	KGF	LBF	% Full Scale	in	mm	in	mm	in	mm	mm
FLC-500	500	50	112	150	0.004	0.10	2.5	63.0	2.0	50.8	M6 x 1-6H
FLC-1000	1,000	100	225	150	0.006	0.15	2.5	63.0	2.0	50.8	M6 x 1-6H
FLC-2000	2,000	200	450	150	0.005	0.13	3.0	76.2	2.0	50.8	M12 x 1.75-5H
FLC-2500	2,500	250	562	150	0.005	0.13	3.0	76.2	2.0	50.8	M12 x 1.75-5H
FLC-5KN	5,000	500	1,124	150	0.005	0.13	3.0	76.2	2.0	50.8	M12 x 1.75-5H

NOTES
1. Load measurement accuracy is ±0.1% of load cell capacity. Display resolution is 10,000:1.
2. For FMS, MMS, FMD or MMD frames.

Economy Models

When price is an issue, these general purpose load cell sensors are economical and suitable for most general purpose force measurement applications.

FLC-E "Economy" S-beam Sensors

	Load Capacity			Safe Overload	Full Scale Deflection		Height		Width		Thread
Model No.	N	KGF	LBF	% Full Scale	in	mm	in	mm	in	mm	mm
FLC-50E	50	5	11	150	0.003	0.08	2.5	63.5	2.0	50.8	M6 x 1-6H
FLC-100E	100	10	22	150	0.003	0.08	2.5	63.5	2.0	50.8	M6 x 1-6H
FLC-200E	200	20	45	150	0.003	0.08	2.5	63.5	2.0	50.8	M6 x 1-6H
FLC-500E	500	50	112	150	0.004	0.10	2.5	63.5	2.0	50.8	M6 x 1-6H
FLC-1000E	1,000	100	225	150	0.006	0.15	2.5	63.5	2.0	50.8	M6 x 1-6H
FLC-2000E	2,000	200	450	150	0.006	0.15	3.0	76.2	2.0	50.8	M12 x 1.75-5H
FLC-2500E	2,500	250	562	150	0.005	0.13	3.0	76.2	2.0	50.8	M12 x 1.75-5H
FLC-5000E	5,000	500	1,124	150	0.005	0.13	3.0	76.2	2.0	50.8	M12 x 1.75-5H

NOTES
1. Load measurement accuracy is ±0.1% of load cell capacity. Display resolution is 10,000:1.
2. For FMS, MMS, FMD or MMD frames.

Accessories

Test Fixtures, Extensometers, Shields

Test Fixtures

We offer a full range of test fixtures, grips and accessories. Test fixtures are compatible with all Starrett systems and test frames. We can also engineer and supply custom test fixtures to your exact requirements.

Types

- Button Head
- Compression Cages
- Flexural
- Hydraulic
- Peel
- Platens
- Pneumatic
- Ribbon
- Roller
- Scissor
- Shear
- Vice-action
- Wedge-action

Specimen Dies

Dies are available for testing a variety of materials including rubber, plastic, elastomer, fabric, paper, films and more. Dies are engineered to comply with common testing standards including:

- ASTM D-412 (A,B,C,D,F)
- ASTM D-638 (I, II, III, IV, V)
- ISO 34 (A,B)
- BS 6746
- IEC 540

Starrett specimen dies help ensure accurate dimensions for your sample preparations.

Starrett can supply a wide assortment of testing fixtures that comply with international testing standards from ASTM, ISO, DIN, TAPPI and more. We can also supply custom test fixtures for difficult sample shapes.

Extensometry

Starrett is compatible with a full range of contact-type extensometers. Our systems are compatible with Reliant Technologies® and Epsilon® extensometers and feature automatic identification of model and measuring range.

- Types
- Axial
- Traverse
- Bi-axial
- Averaging
- Miniature
- Long Gage Length, Small Range
- Long Gage Length
- High Elongation

Splinter Shields

Optional splinter shields are available for both single- and dual column testers. Shields feature electronic interlocks and are constructed of shatter-resistant aerospace acrylic.

Our MMS and MMD material test frames may be used with extensometers. These L3 Systems may use extensometers from Reliant Technologies and Epsilon Technology Corporation.

Extensometers are customized so that they are automatically recognized by the L3 system. Selecting the Extensometer symbol will display key characteristics of the instrument including measuring range.

Digital Force Gages

For Advanced and Basic Testing Applications

Starrett digital force gages can be used as handheld force gages for basic applications or as a force sensor when used with a FMM Digital Force Tester, MTL and MTH Manual Tester. Listed are the various test methods that can be performed:

- **Limit Testing** - Use load, distance or a break condition and report results at the limit including maximum load and distance at maximum load.
- **Load Average Testing** - The load average test measures the load from the start and end of a test sequence.
- **Time Average Testing** - Set a time duration for a test. When load is measured at the start of the test, the test concludes at the end of the time duration. Average load is measured.
- **Cyclic Count Testing** - Define the number of cycles, up to 99,999 to be completed.
- **Cyclic Duration Testing** - Define the duration of cycles, up to 27 hours to be completed.
- **Constant Hold Testing** - Hold at a distance or load for creep and relaxation results. The maximum duration is 27 hours.
- **Contact Closure/Switch Testing** - Uses the DFC force gage to signal when an electronic switch is opened or closed as load is applied or removed.

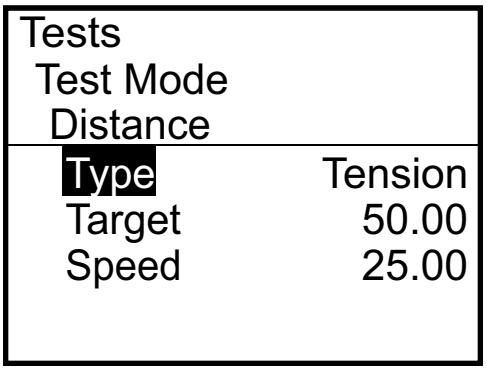

Easy Test Setup
As a controller, the DFC can be used to measure load and control the FMM Test Frame. Create Load, Distance and Break Limit test methods in seconds.

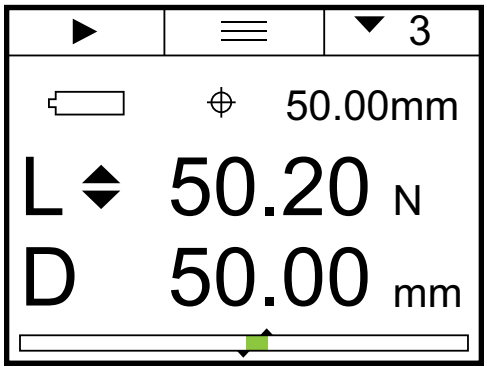

Comprehensive Results
At the completion of your test, the DFC will display load and distance results. These can be saved to memory or exported for reporting.

DFC Digital Force Controller

The DFC is a revolutionary concept for force measurement using a handheld force gage. The DFC may be used as a high-accuracy handheld force gage or as a digital controller for use with the FMM Digital Force Testers. The DFC can serve as a universal interface where you set up your tests and where you configure load limits, distance limits, break limits, crosshead travel direction, crosshead speed and more. The DFC features a measurement accuracy of 0.1% full scale with internal data sampling at 25kHz. Display resolution is 10,000:1. The DFC features Bluetooth®, USB and RS-232 communications plus digital I/O.

DFC mounted on FMM-550X Digital Force Tester

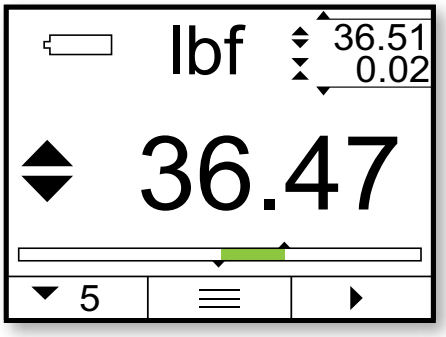

Real Time View
Primary window shows active load being applied to the load cell. The secondary windows shows the measured peak in tension made - 36.51lbf.

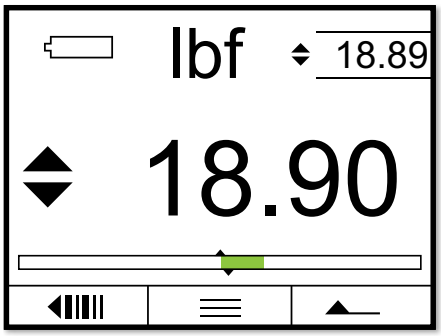

Tension Peak View
Shows maximum load measured in primary window. Secondary window shows real time load.

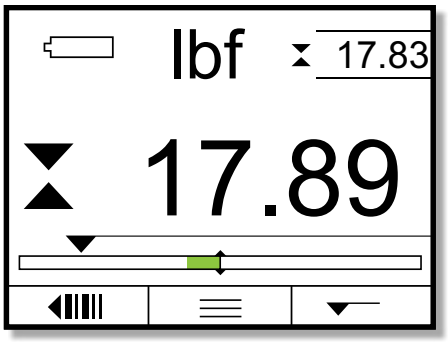

Compression Peak View
Shows maximum load measured in primary window. Secondary window shows real time load.

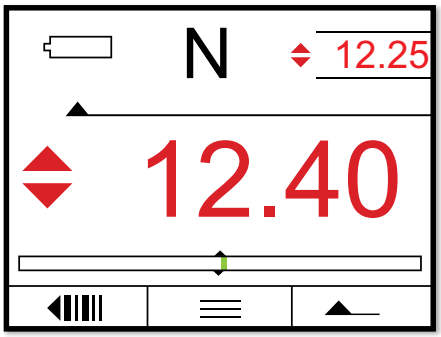

Tolerance View
When a tolerance is used, out-of-tolerance results display in red.

DFG Digital Force Controller

The DFG is our basic force gage. The gage measures force at an accuracy of better than 0.2% full scale.

The DFG is ideal for basic tensile and compression testing. Test setup and operation is fast, efficient and easy for anyone. The DFG display shows the test direction and dynamic load during testing. Results are displayed at the completion of testing, including "Pass-Fail" when tolerance is applied. The gage will display statistics when results are saved to the gage's internal memory. Store up to 50 test results in local memory.

Digital Force Gages

Features

- Use as handheld instrument or mount to Starrett test frames: FMM, MTL and MTH.
- Excellent display resolutions:
  - DFC 10,000:1
  - DFG 5,000:1
- Precise and accurate load measurements:
  - DFC 0.1% full scale
  - DFG 0.2% full scale
- Load sensors have safe overload rating of 200%
- High-resolution OLED color display with adjustable backlight and Auto Off feature
- Supplied with NIST-traceable Certificate of Calibration
- 3-year warranty
- Metric threads for screw-on attachments. Can be fitted with clevis adapters that fit hundreds of Starrett test fixtures.
- A primary and secondary display window shows your results. Out-of-tolerance results display in red.
- Adjustable sampling rates help you capture peak loads. Filters can be applied to peak and display values.
- Multiple display languages.
- Battery provides more than 30 hours of continuous operation. Charge battery using USB cable.
- Change display (Flip feature) orientation without having to expose electronics.
- Easy-to-use multi-function keypad. Softkeys are programmable to your most used functions.
- Programmable sounds for alarms, such as an out-of-tolerance result
- Cast-aluminum housing
- Comfort grip for handheld testing applications.

The USB connection is used for charging the battery or for transmitting data to a personal computer. The RS-232 cable is used for connection to the Starrett FMM Series digital tester. The DFC Series also has Bluetooth®.

Digital Force Gages

Specifications

Digital Force Gages		
Specification	**DFC**	**DFG**
Accuracy, Full Scale	0.1%	0.2%
Data Sampling (Hz)	25,000	10,000
Display Resolution	10,000:1	5,000:1
Safe Overload, Full Scale	200%	200%
Maximum Tare	10%	10%
Communications		
Bluetooth®	Yes	No
USB 2.0	Yes	Yes
RS-232	Yes	Yes
Digital I/O	2 channels	No
Memory, maximum results saved in gage	99	50
Operating Mode		
Machine Control[1]	Yes	No
Real Time	Yes	Yes
Peak Compression	Yes	Yes
Peak Tension	Yes	Yes
Load Limit	Yes	Yes
Break Limit	Yes	No
Load Average	Yes	No
Load-Time Average	Yes	No
Cyclic Count (99,999 maximum)	Yes	No
Cyclic Duration (27 hours)	Yes	No
Hold Duration (27 hours)	Yes	No
Contact Closure	Yes	No
Power, Environmental		
Battery Type	Lithium Ion	
Battery Life, typical @ 20% brightness	>30 hours	
Charge Time, using 110/240V Mains	<3 hours	
Display	OLED High Resolution	
Operating Temperature	40°F to 110°F (4°C to 43°C)	
Thread, for adapters	Metric M6, M10	
Instrument Weight (approx.)	3lbs (1.36kgs)	

NOTES
1. Machine control is exclusive to the DFC. When connected to the FMM Digital Force Tester, configuration of force gage and tester is performed through the gage.

Accessory Kits

The DFC and DFG Force Gages are supplied with a complete accessory kit. The kit includes a hook, notch, chisel, flat, chisel and point adapter. A 6" extension rod is included. Adapter materials are stainless steel. Aluminum is used for 2lbf (10N) and 10lbf (50N) capacities.

Included with the force gage is a carrying case, USB cable, a set of testing accessories, a Quick Reference Guide and NIST-traceable Certificate of Calibration.

Force gage standard accessories

DFC - Advanced Force Controller										
	Load Capacity					Safe Overload	Full Scale Deflection		Thread	Accessory
Model Number	N	KGF	LBF	OZF	GF	% Full Scale	in	mm	mm	Kit
DFC-2	10	1	2	32	900	200	0.013	0.33	M6 x 1-6H	SPK-FG-A
DFC-5	20	2	5	80	2200	200	0.007	0.18	M6 x 1-6H	SPK-FG-A
DFC-10	50	5	10	160	5000	200	0.006	0.15	M6 x 1-6H	SPK-FG-S
DFC-20	100	10	20	320	10,000	200	0.008	0.20	M6 x 1-6H	SPK-FG-S
DFC-50	250	25	50	800	25,000	200	0.015	0.39	M6 x 1-6H	SPK-FG-S
DFC-100	500	50	110	1600	50,000	200	0.024	0.60	M6 x 1-6H	SPK-FG-S
DFC-200	1000	100	225	-	-	200	0.021	0.54	M6 x 1-6H	SPK-FG-M
DFC-500	2500	250	550	-	-	200	0.028	0.70	M10 x 1.5-5H	SPK-FG-L

NOTES
Load measurement accuracy is ±0.1% of load cell capacity. Display resolution is 10,000:1.

DFG - Basic Force Controller										
	Load Capacity					Safe Overload	Full Scale Deflection		Thread	Accessory
Model Number	N	KGF	LBF	OZF	GF	% Full Scale	in	mm	mm	Kit
DFG-10	50	5	10	160	5000	200	0.006	0.15	M6 x 1-6H	SPK-FG-S
DFG-20	100	10	20	320	10,000	200	0.008	0.20	M6 x 1-6H	SPK-FG-S
DFG-50	250	25	50	800	25,000	200	0.015	0.39	M6 x 1-6H	SPK-FG-S
DFG-100	500	50	110	1600	50,000	200	0.024	0.60	M6 x 1-6H	SPK-FG-S
DFG-200	1000	100	225	-	-	200	0.021	0.54	M6 x 1-6H	SPK-FG-M
DFG-500	2500	250	550	-	-	200	0.028	0.70	M10 x 1.5-5H	SPK-FG-L

NOTES
Load measurement accuracy is ±0.2% of load cell capacity. Display resolution is 5,000:1.

Manual Force Testers

MTL Manual Testers

The MTL Manual Testers are single column, manually-operated force testers. These testers operate with a quick-action lever in either tension or compression directions. Two models are available- the MTL-110 and MTL-330. Force measurement is performed using a Starrett DFC or DFG digital force gage.

MTL-110

The MTL-110 can measure force up to 110lbf (500N, 50kgf). This tester is ideal for component testing and its compact design fits small work spaces. The MTL-110 has a 6" (152mm) stroke. The tester's quick-action lever moves the rack and pinion crosshead 3" (76mm) per revolution. The lever may be positioned anywhere along the 20" (508mm) column, and with a 6" (152mm) throat, large samples can be accurately tested. Options include a digital scale for measuring deflection distance. The base adapter adjusts to accommodate different gage models.

MTL-330

The MTL-330 can measure force up to 330lbf (1500N, 150kgf). This tester can be used for tensile and compression testing applications, and is ideal for spring testing. Fit the MTL-330 with a Starrett digital force gage and optional digital scale to determine spring rates, initial tension and more. The MTL-330 can be easily mounted to your workbench for secure testing.

Like the MTL-110, the quick-action lever moves the rack and pinion crosshead 3" (76mm) per revolution. The lever may be positioned anywhere on the 30" (762mm) column, and with a 4" (102mm) throat, large samples can be accurately tested. Optional gage adapter kits are available for use with non-Starrett force gages.

The MTL may be equipped with optional legs so that you can test in a horizontal position.

Features

- Two Capacities: 110lbf, 330lbf (500N, 1500N)
- Compact Design is Ideal for Lean Manufacturing Environments
- Lever-type, Quick-action Crosshead Movement
- Precision Rack and Pinion
- Excellent Position Resolution: Single Rotation for 3" (75mm)
- Adjustable Gage Mounting

MTL - Manual Force Tester, Lever Control												
	Load Capacity			Crosshead Travel		Resolution/Rotation		Throat		Weight		Thread
Model Number	N	KGF	LBF	in	mm	in	mm	in	mm	lbs	kgs	mm
MTL-110	500	50	110	6	152	3	76	4	102	18	8.2	M6, #10-32
MTL-330	1500	150	330	6	152	3	76	4	102	20	9.1	M10

Manual Force Testers

MTH Manual Testers

The MTH Manual Tester is a single column, manually-operated force tester. The MTH has a load measurement capacity of 550lbf (2500N, 250kgf) and can be used for compression or tensile testing. The mechanical advantage afforded by the MTH-550's precision, high-resolution worm gear design lets you test effortlessly. One rotation of the hand wheel positions the crosshead 0.03" (0.75mm). Total stroke for the MTH-550 is 4" (102mm). Force measurement is performed using a Starrett digital force gage.

The MTH-550 is an ideal, affordable solution for spring testing. Fit the MTH-550 with a digital force gage and optional digital scale to determine spring rates, initial tension and more.

The hand wheel may be positioned anywhere along the 30" (762mm) column, and with a 4" (102mm) throat, large samples can be accurately tested. The base may be permanently affixed to your workbench. Optional gage adapter kits are available for use with non-Starrett force gages. Quick-change clevis adapters let you mount a large selection of Starrett testing fixtures.

Features

- Tension or Compression Testing
- Excellent for Cost-Effective Spring Testing
- Effortless Crosshead Movement
- Precision Worm Gear Design
- Excellent Position Resolution: Single Rotation for 0.03" (0.75mm)
- 30" (762mm) Column Height, 15" (380mm) Working Area
- Adjustable Gage Mounting

The MTH-550 may be equipped with optional legs so that you can test in a horizontal position.

MTH - Manual Force Tester, Hand Wheel Control

	Load Capacity			Crosshead Travel		Resolution/Rotation		Throat		Weight		Thread
Model Number	N	KGF	LBF	in	mm	in	mm	in	mm	lbs	kgs	mm
MTH-550	2500	250	550	4	102	0.03	0.75	4	102	22	10	M10 x 1.5-5H

Applications

Adhesives

Important characteristics of adhesives, epoxies and materials that are bonded to one another can be measured using peel testing methods. Pressure-sensitive adhesive properties associated with materials such as labels, packaging products and medical wound management products, can be tested using a 180° testing method.

Biomedical

Testing medical devices and materials used in the production of medical devices are critical to ensure compliance to federal regulations. From the testing of latex products, syringes, stents, catheters to packaging products for medical devices, L3 systems can be used to verify and validate material compliance.

Metals

Metals and alloys are tested under varying conditions. Tensile, compressive, shear, flexural and fracturing properties are important characteristics of all metals and alloys. Modulus, brittleness versus ductility, strength at offset yields are used to characterize these products and their ability to satisfy application and life-cycle requirements.

Building Materials

Materials used in building products, including asphalt and cement-based products can be tested to ascertain their strength and suitability under varying environmental conditions. Compressive and shear properties can be determined using L3 systems.

Composites

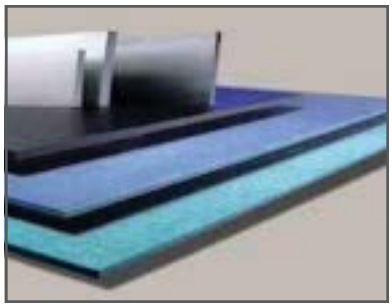

Composites are made by combining two or more materials- often materials with very different properties. Composites based on polymers continue to evolve and find their way into all kinds of products for aerospace and automotive applications to medical applications. Understanding stress and strain characteristics are critical in evaluation composites and their applicability.

Plastics

The growth of plastics and polymers is exponential. Plastics are used everywhere in consumable materials to life-saving medical devices. Plastic properties are important in validating materials used in the development of products comprised of polymers. Tensile, compression, break/rupture/puncture and flexural testing are important characteristics in classifying plastics.

Ceramics

Ceramic and glass products are increasingly be used in a wide variety of products from cellular phones to fibre-optic cables. Because of their inherent brittleness, assessing their mechanical properties are important considerations, both in their design and application.

Textiles

Fabric, yarn, filaments, cords and cloth are tested for strength and durability. Both natural and synthetic textiles are tested for strength and adhesion, tear strength, seam slippage and break strength.

Rubber/Elastomers

Medical gloves, hoses used in automotive and aerospace products, foam, seals and building products are made from rubber and elastomer products. Compression strength, creep strength, puncture strength and tensile strength are important in assessing their suitability and manufacturability.

Applications

Common Test Method Standards performed using L3 systems

ASTM Test Methods

A370	C469	D1876	D4268	D7136	E23	F2258
A48	C633	D1894	D429	D7137	E290	F2267
A615	C78	D2256	D4632	D7192	E399	F2346
A746	C880	D2261	D5034	D7269	E517	F2412
A938	C99	D2444	D5035	D790	E646	F2458
A996	D256	D2844	D5083	D882	E8	F2477
B557	D1002	D3039	D5250	D885	E813	F2516
C109	D1004	D2043	D5587	D903	E9	F2606
C1550	D1047	D3163	D575	D905	F1306	F382
C1609	D1238	D3364	D5766	E1012	F1614	F384
C165	D1335	D3763	D5930	E119	F1714	F543
C170	D1414	D3822	D6610	E1290	F1717	F606
C192	D143	D3835	D6272	E18	F2063	F88
C297	D1525	D3846	D6319	E1820	F2077	
C31	D1621	D4018	D638	E190	F2079	
C39	D1708	D412	D648	E208	F2255	
C42	D1761	D413	D695	E21	F2256	

ISO Test Methods

10319	13934-2	14879	2062	4587	6603-2	7800
11193-1	13937-2	15630-1	20795-1	527-1	6872	7886-1
11193-2	13937-3	15630-3	20795-2	527-2	6892-1	8067
1133	13937-4	16402	2307	527-3	6892-2	813
11339	14125	17744	2411	527-4	7206-4	8256-A
11343	14126	178	306	527-5	7206-6	8295
11443	14129	179-1	3133	604	7206-8	844
11897	14130	179-2	3183	6238	7438	9073-4
12737	1421	1798	34-1	6383-1	75	
13007-2	148	180	36	6475	75-1	
13934-1	14801	1926	37	6603-1	75-2	

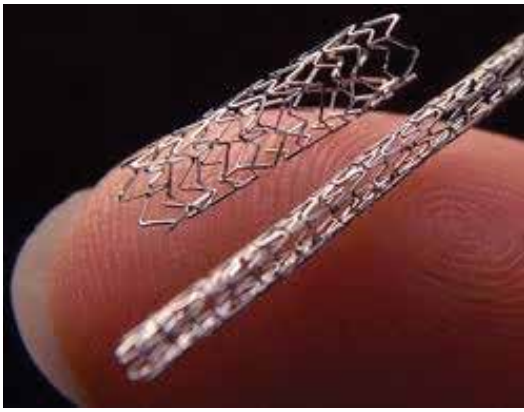

Applications

We Know Force Analysis and Measurement

Tensile testing

Identifying tensile force characteristics such as peak load is critical in validating a product's safety and application. Whether its consumer products, medical products, packaging materials or fasteners used in the building trades, tensile testing is a fundamental measurement available on all Lx systems.

Shear testing

Shear tests help measure the deformable mechanical properties of cosmetics, plastics, composites, fluids and other samples. Lap shear testing can be used to measure mechanical weld strength or the adhesive strength of epoxies.

Peel testing

Adhesive strength properties are measured to understand the bonding capabilities of coatings and glues on various types of materials- from paper to substrates to building materials. Both 90° and 180° testing can be performed to measure the peak holding strengths under standard test methods such as ASTM F88.

Compressive testing

Compressive loads are important in evaluating packaging designs, such as top load testing. Core sampling of concrete-based products are measured to determine their strength. And springs are analyzed under load to determine spring rate based on free length.

Flexural testing

Flexural strength and material stiffness represent the combined effects of a sample's basic tensile, compressive and shear characteristics. Composites, wood products, paper products can be tested in both 3- and 4-point methods to determine their stiffness and resilience.

Coefficient of friction testing

ASTM D1894 is a common test method for measuring coefficient of friction. Materials such as plastic sheeting can be tested to measure both the static and kinetic frictional characteristics. Other materials, such as flooring products are tested to determine their slip resistance and safety under various environmental conditions.

Break, Fracture and Rupture testing

Destructive testing can involve tensile, compressive, shear and other test methods where the product is tested to failure. Often this testing is used to determine the "peak" measurements that occur prior to the break event. Lx system allow you to measure precisely based on stress, strain, load, displacement and time.

Load rate testing

Load rate testing is a more complex testing method compared to testing to a setpoint at a specific velocity. Load rate testing can be used on consumer products, such as children's attire, to measure the pull strength of buttons and their resistance to breaking loads. Here the button is pulled at a rate (lbf/minute) rather than a time velocity (in/min).

Contact closure testing

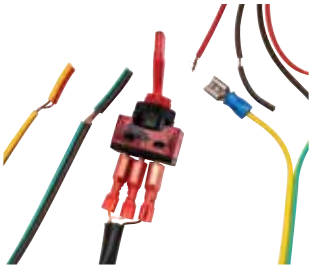

Using the optional Automation Builder, the "make and break" load for an electrical switch can be measured precisely. Load is applied to the switch and the peak load is measured when the switch closes/opens. This type of application can be tested on keypads, membranes and other materials that utilize a resistance change.

Insertion/Extraction testing

Insertion/extraction testing is performed on electronic components like jacks, medical devices, consumer products, and more. The loads are measured in both directions- tensile and compressive to determine the sample's characterization for the application and for product life-cycle determination.

Creep and Relaxation testing

Foam is a material where its deformation while under an applied load below its yield strength is measured and analyzed. Knowing the material's ability to maintain its specified deformation is important for comfort and longevity in its intended application.

Applications

Packaging Testing

T-Peel
90° Peel
180° Peel
Solder Paste Tackiness
ASTM F1140 - Burst Strength
ASTM D2659 - Top Load
ASTM F88 - Seal Strength
EN 868-5 - Seal Strength Pouches
ASTM C633 -Adhesion Spray Coating
ASTM D1335 - Tuft Binding Floor Covering
ASTM D903 - Adhesive Bond
ASTM D1876 - Peel Resistance
ISO 36 - Rubber Adhesion
ISO 2411 - Adhesion Plastic
ISO 4587 - Lap Shear Strength
ISO 11339 - Flexible Bond Assembly
EN 1465 - Lap Shear Strength
EN 1719 - Tack Measurement
EN 1939 - Peel Adhesion
Component Testing
Compress (Load/Extension)
Compress (Stress/Strain)
Indentation (Load/Extension)
Indentation (Stress/Strain)
Spring Rate
Spring Force
Spring Height

Medical Device Testing

ASTM F88 - Seal Strength
ASTM F382 - Metallic Bone Plates
ASTM F451 - Bone Cement Strength
ASTM F564 - Metallic Bone Staples
ASTM F1828 - Ureteral Stents
ASTM F1839 - Foam Devices
ASTM F1874 - Sutures Bend Test
ASTM F2079 - Stents Tensile Strength
ASTM F2132 - Puncture Resistance
ASTM F2183 - Punch Testing
ASTM F2255 - Lap Shear Testing
ASTM F2256 - Tissue Adhesives
ASTM F2258 - Tissue Adhesives
ASTM F2392 - Burst Strength Sealant
ASTM F2458 - Closure Strength
ASTM F2477 - Stents Strength
ASTM F2502 - Plates and Screws
ASTM F2516 - Tensile Nitinol Wire
ASTM F2606 - Bend Vascular Stent
ASTM D6319 - Medical Gloves
BS EN 455-2 - Medical Gloves
ISO 7886-1 - Hypodermic Syringe
ISO 14879 - Tibial Trays
ISO 11193 - Medical Glove

Compression Test

Tensile Test
Tensile Strength
ASTM D3039 - Tensile Carbon Fiber
ASTM D3846 - Shear Strength
ASTM D7269 - Aramid Cords
ASTM D6484 - Compressive Strength
ASTM D1055 - Flex Resistance
ASTM D3574 - Indention Deflection
ASTM D3574 - Foam Deflection
EN 14509 - Shear Strength
ISO 527-4 - Tensile Isotropic/Orthotropic
ISO 14125 - Flexural Properties
ISO 14126 - In-plane Compression
TAPPI - 404 - Tensile Break Strength
TAPPI 220 - Burst Strength
TAPPI 456 - Wet Paper Strength
TAPPI 457 - Pull to Rupture

Services

Calibration, Field Service, Factory Service

We can provide all levels of service for your material test and force measurement systems. We can supply a comprehensive range of calibration and verification services to ensure that your testing meets the requirements of international testing standards. Calibrations can be performed to ASTM E4 for load and ASTM E2658 for displacement or to equivalent standards from ISO, BS, DIN and more. Speed, stress and strain verifications can be performed on-site by technicians accredited to ISO 17025.

Preventative maintenance programs, field and factory repair services are available to ensure that your systems perform to their published specifications.

Starrett can provide factory services including load cell calibrations, test frame repair and reconditioning. All Starrett load cell sensors are supplied with a NIST-traceable Certificate of Calibration.

Specialized services, including system integration with existing instrumentation, or application development for complex testing applications can be supplied by your Starrett representative.

Your Starrett representative can provide on-site training to your personnel to help ensure that your system operates to its published specification. Our training also provides your operators with the knowledge needed to perform your testing in a safe and efficient manner. Our objectives are to help you make your products better through improved resource utilization, increased throughput and optimized efficiency.

Starrett stocks critical spare parts and accessories for quick delivery. Load cell sensors and commonly used test fixtures are readily available.

Field and factory calibrations are performed by authorized Starrett service technicians to accepted industry standards and methodology. All calibrations are NIST-traceable.

LASER MEASUREMENT

Laser Measurement

Profile360 is an in-line, real-time, non-contact measurement system for continuously monitoring key profile dimensions in complex shapes such as rubber, ceramic, plastic, and wood-plastic composite extrusions, roll-formed metal profiles, and profiled wire. Profile360 employs CrossCheck™ Line Laser Sensors to digitize the profile, compare it to a CAD template, and continuously monitor key dimensions. Dimensional changes often indicate a change in material, equipment, or process, resulting in poor quality or high scrap or reclaim cost.

Profile360 continuously monitors the size and shape of complex profiles in order to assure quality and avoid the high cost of defects. The system acquires thousands of data points around the profile and matches them to a CAD template, where key measurement parameters such as width, thickness, gap, radius, and angle are extracted. Measurement parameters are compared to allowable control limits and displayed on the operator's terminal with a pass/caution/fail status indicator. Profile360 runs at rates up to 20 profiles per second. The system is available in standard sizes and can be custom-built for almost any size and shape.

In-Line monitoring is displacing off-line checking methods:

- Alarms immediately when the dimensions change so that operators can intervene to correct the process, resulting in improved quality, improved production yield, and reduced cost of scrap and rework
- Provides instant measurements, so the operator can immediately see the results of all line adjustments
- Provides 100% inspection of the entire run compared to periodic off-line checking, which can miss many disturbances
- Used by many to decrease start-up time, resulting in higher production yield and lower scrap cost

The Profile360™

Unlike oscillating measurement systems, Profile360 has no moving parts – no slides, motors, controllers, or encoders to require maintenance and calibration. The system is sealed and temperature controlled to assure a constant internal temperature. This results in a greatly reduced thermal drift for the system and assures a long laser diode life, even in tough environments.

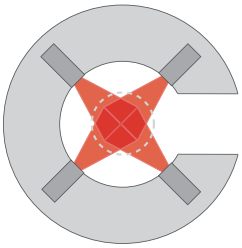

C-Frame Systems

- Available in 10, 30, 50, 75, 100, and 175mm diameter fields-of-view
- Available in 2, 3, 4, 5, or 6 sensor configurations
- Available with the Industrial Mobility Package, which includes: Mobile lift cart, Industrial PC, Industrial Touchscreen monitor, UPS, PLC, and light stack, assembled into an "all-in-one" package

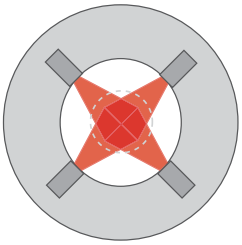

O-Frame Systems

- Available in 300, 600, and larger fields-of-view
- Available in 2, 3, 4, 5, 6, 7, or 8 sensor configurations
- Custom sizes and configurations also available

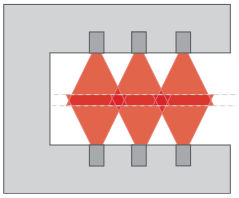

Two-Sided Systems

- Available using any sensor size, in overlapping and non-overlapping sensor orientations

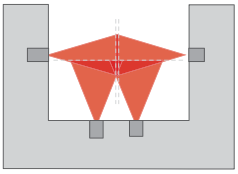

Three-Sided Systems

- Available using any size sensor, in overlapping and non-overlapping sensor orientations

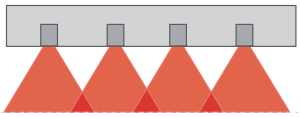

Single-Sided Systems

- Available using any sensor size, in overlapping and non-overlapping sensor orientations

Inspecting with the Profile360™

- Line Operators can immediately observe and react to manufacturing problems
- Production Managers can quickly review historical run data
- Quality Control Managers can better understand the process and factors that cause variation

Additional Benefits Include

- Faster startups, faster product development, faster die design
- Improve customer satisfaction
- Reduce inspection labor and material scrap

Auto Seals

When auto sealing extrusion lines go out of specification, they produce about $1,400 per hour in scrap. The scrap is not recyclable because the rubber is vulcanized, and often is cured over metal reinforcement. The result is a loss in raw materials, labor, energy, landfill cost, and production time.

Profile360 alarms any time dimensions change so the operator can act to correct the process, save scrap, and improve production. The Profile360 investment payback period is achieved in only 32 hours of scrap savings. If you can avoid 1 hour's worth of scrap per week, your Profile360 investment is realized in 32 weeks.

Savings with Profile360™*		
Compound Cost		$1.32/meter
Line Speed		18.2 meters/min
Compound Cost/hr	18.2m/min x 60min/hr x $1.32/m	$1,441/hr
Profile360 Investment		$42,900
Payback Period	$42,900 ÷ $1,441/hr	32 hours

* If you can reduce scrap by 1 hour per week, you can achieve a payback in 32 weeks based on raw materials cost avoidance alone, not to mention the cost of customer returns.

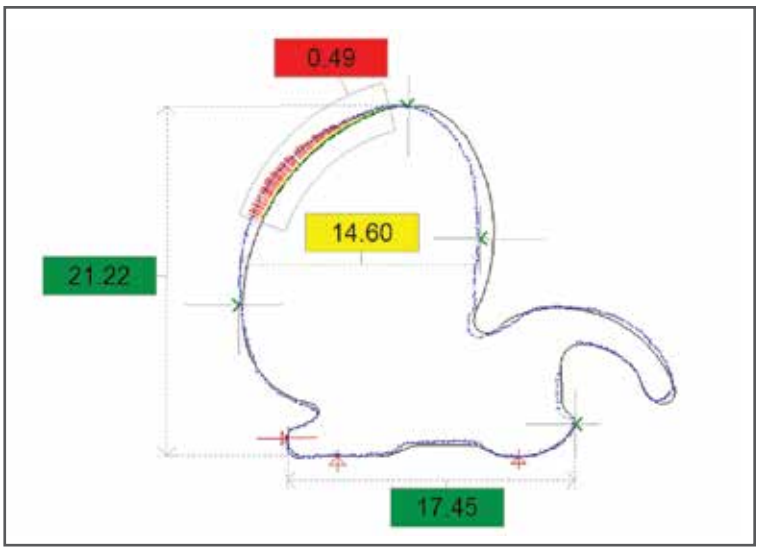

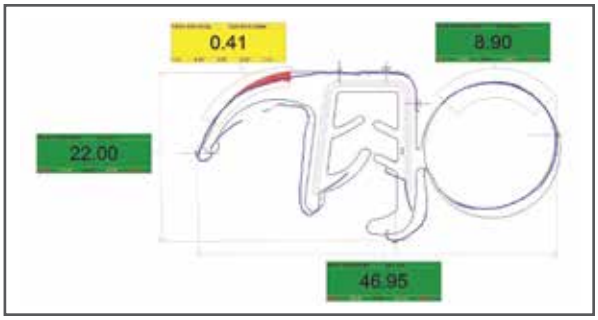

Extruded Window Profiles

PVC profiles can distort during calibration and cooling, resulting in non-usable profiles.

In-line checking with Profile360™ assures that the operator will be alerted any time there is a change in size, shape, or squareness. This helps reduce the time and cost of rework and improves yield.

Since Profile360 provides real-time measurement, there is no need to cut samples, de-burr the cut edges, and walk to a central off-line inspection station in order to check dimensions. Profile360 greatly reduces the cost of dimension checking, and provides a much faster result.

Features

- Monitor angles, squareness, gaps, grooves, and other key dimensions in real-time with on-screen optical comparator and trend graph displays
- Alarm when dimensions change
- View real-time profile geometry from any PC on your network
- Report complete dimensional statistics for each run

Which of These is the Most Efficient Way to Start Up Your Extrusion Line?	
Profile360™	**Off Line Methods**
View Real-Time Profile Dimensions In-Line	Cut Part
Adjust Extruder Immediately	Walk to Metrology Lab
Allow Adjustment to Stabilize and Pass Through Profile360	Cut Sliver
Repeat	Clean and Prep Sliver
Time Required: 5 min per adjustment	Put Sliver in Queue for Measurement
	Upload File/Find Mylar Place Sample On Scanner/10x
	Complete Measurement Routine
	Print Report
	File Report
	Walk Back to Extruder
	Adjust Extruder
	Wait for Adjustment to Stabilize
	Repeat Entire Process
	Time Required: 30 to 60 min per adjustment

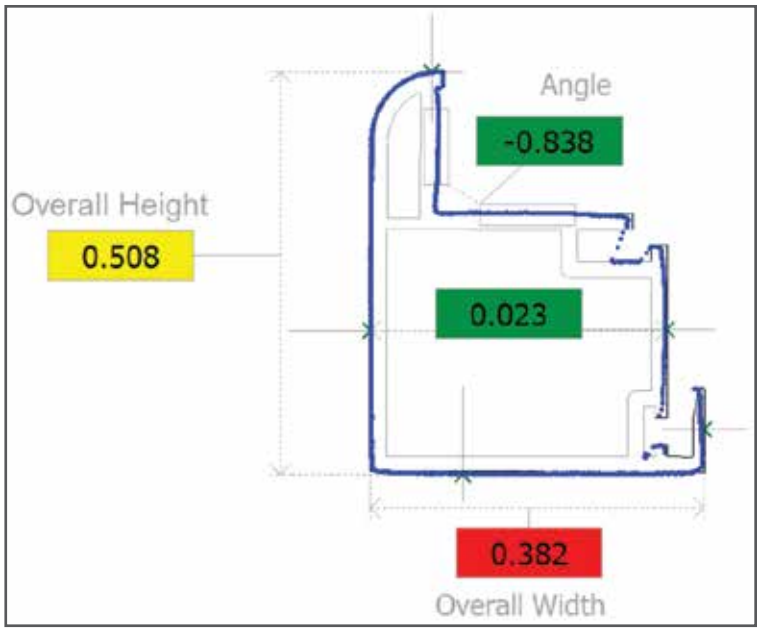

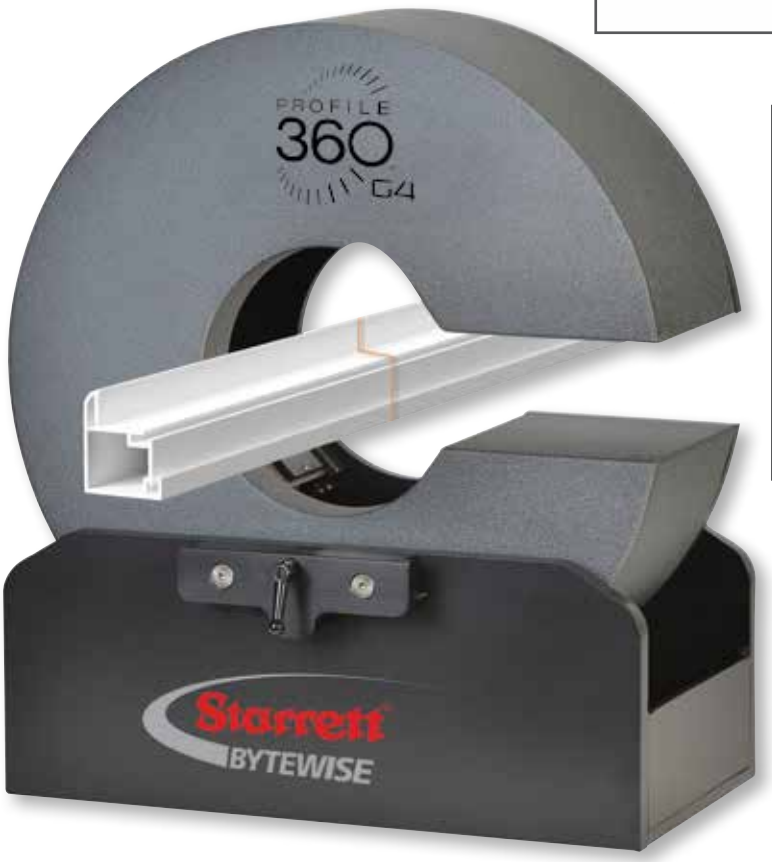

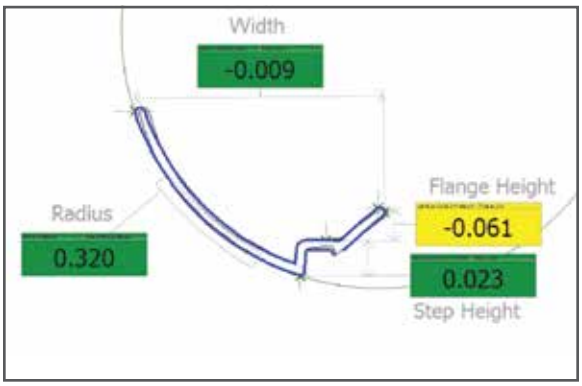

Wood-Plastic Composite

Wood-plastic composites have variations in raw material properties, humidity, and barrel temperature, and these variations can result in profiles that swell or sag, resulting in defective boards. Profile360™ is employed to continuously monitor profiles coming out of the die to assure the process is under control and the size and shape is correct. Profile360™ can measure boards to the lower end of the allowable tolerance range in order to reduce the raw material cost per board, resulting in payback within 100 days.

Features

- Monitor tongue and groove dimensions, squareness, flatness, embossing depth, and other key dimensions in real-time with on-screen optical comparator and trend graph displays
- Run near lower spec limit to reduce raw material costs

Cost Savings	
Nominal Board Size	5.5in^2
Target Area Reduction	.1in^2 (1.8%)
Material Cost	$.60/lb
Density	.04lb/in^3
Line Speed	144in/min
Target Savings	14.4in^3/min
Cost Savings	$477/day
Payback Period	100 days

Embossing Depth

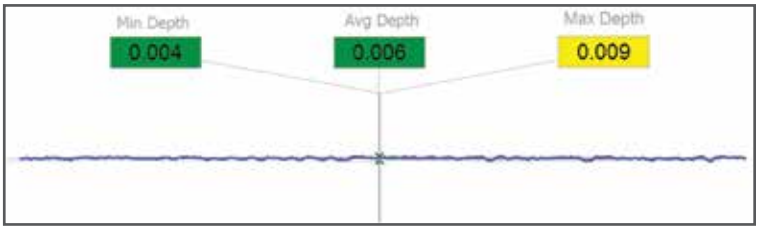

Real-Time Dimensions

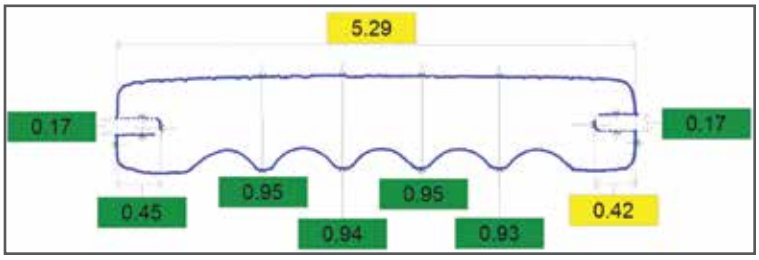

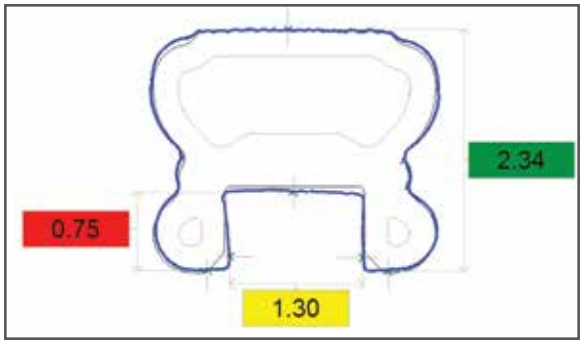

Roll Forming

Roll-formed profiles often go out of specification during a run because the incoming coils have lot-to-lot variations in width, thickness, crown, camber, and physical properties. Manual inspection is a time-consuming method to isolate out-of-specification material, resulting in bad parts produced on long runs.

Features

- Monitor key dimensions in-line for changes due to coil thickness, crown, camber, and physical properties
- Reduce or eliminate costly and time-consuming off-line checking
- Make faster set-ups by checking each pass on-line

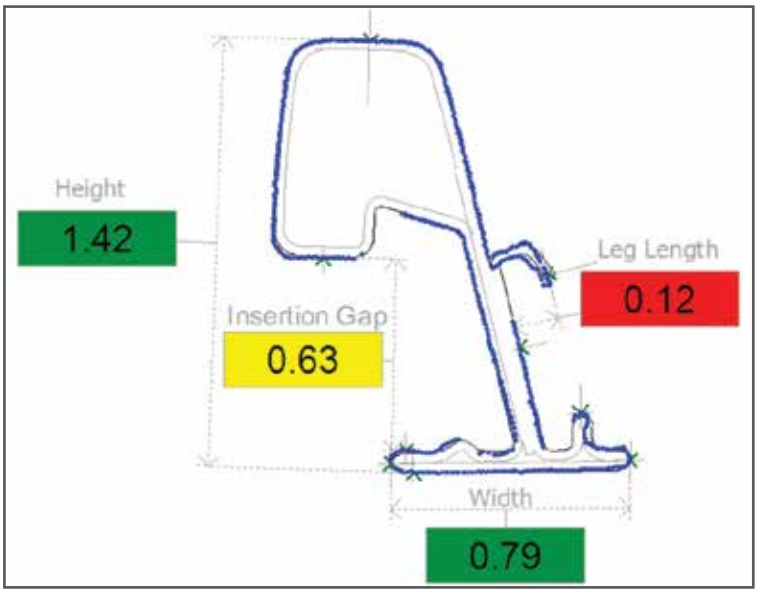

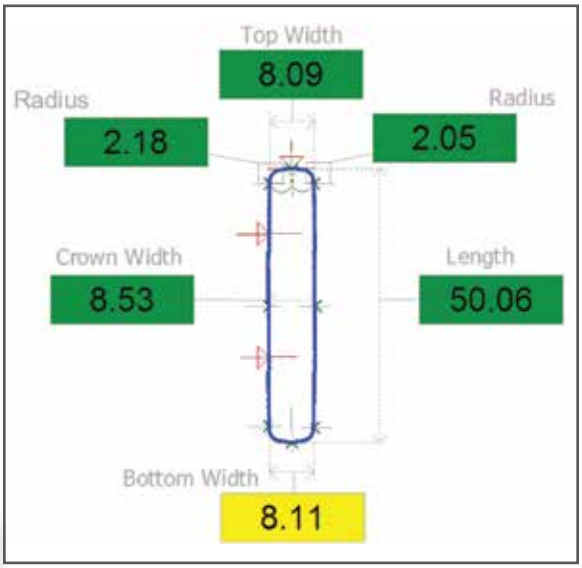

Pipe, OD, Out of Round and Length Measurement

PROFILE360™ MEASURES OUTER DIAMETER AND OUT OF ROUNDNESS OF A PIPE BOTH IN-LINE (ON THE MILL) AND IN FINAL INSPECTION.

When used in final inspection, Profile360 produces an automated dimensional inspection report for the Outside Diameter (OD) and Out of Roundness (OOR) of the pipe ends and body to assure compliance with API and other standards. When installed prior to cutting, the measurements can be used to fine-tune the tooling during a set up change, and then alarm whenever OD or OOR values approach the allowable limits so that an operator can intervene before a quality fault occurs.

PROFILE360 UTILIZES CROSSCHECK™ LINE-LASER SENSORS, DEVELOPED AND OPTIMIZED BY STARRETT-BYTEWISE TO ACHIEVE THE RANGE AND ACCURACY REQUIRED FOR PIPE MILLS.

Sensors are mounted on a precision frame and aligned via patented software techniques. Data sets from each sensor are internally transformed into a global coordinate system to render the complete cross-sectional profile image.

A SINGLE MEASUREMENT CYCLE INSTANTANEOUSLY ACQUIRES THOUSANDS OF DATA POINTS IN A PRECISE CROSS-SECTIONAL PLANE IN A MATTER OF MILLISECONDS.

Software measurement tools can be configured to display and record up to 180 OD values, one per degree, as well as maximum and minimum OD and OOR for the pipe ends and body.

PROFILE360 IS INHERENTLY RELIABLE DUE TO ITS SIMPLE DESIGN.

Unlike oscillating measurement systems, Profile360 has no moving parts – no slides, motors, controllers, or encoders to require maintenance and calibration. The system is sealed and temperature controlled to assure a constant internal temperature. This results in a greatly reduced thermal drift for the system and assures

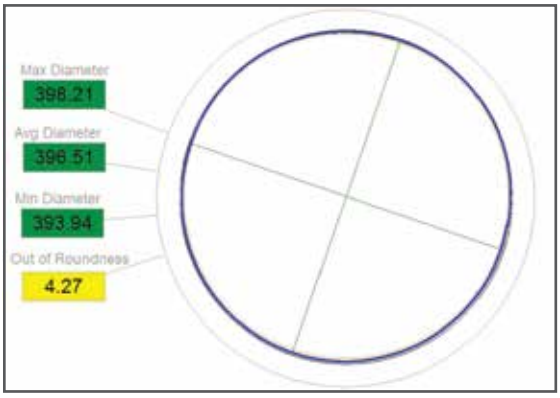

Wire and Cable

Multi-conductor cables, sub-sea cables, and fiber optic cables rely on the cover extrusion to isolate the conductors from the environment to assure safe and reliable power and data transmission. Profile360™ is employed on the line for 100% inspection of the cover geometry.

Profile360 is also used to monitor shaped wire profiles such as magnet wire for size and shape uniformity.

Features

- Monitor key dimensions on-line, in real-time, for changes due material size variations, tooling breakage and wear, spindle alignment, and process control
- Reduce or eliminate costly and time-consuming off-line checking
- Make faster set-ups

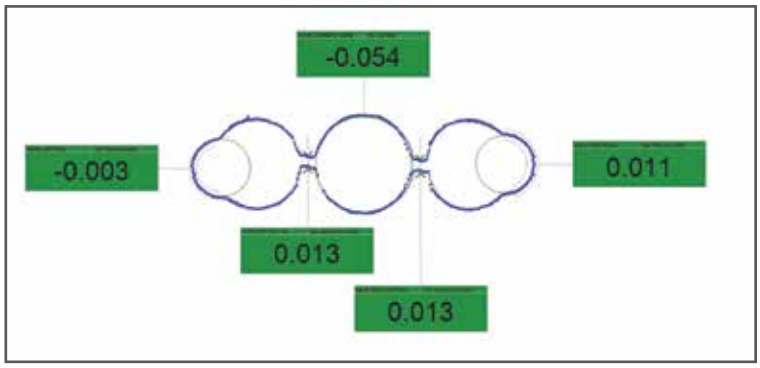

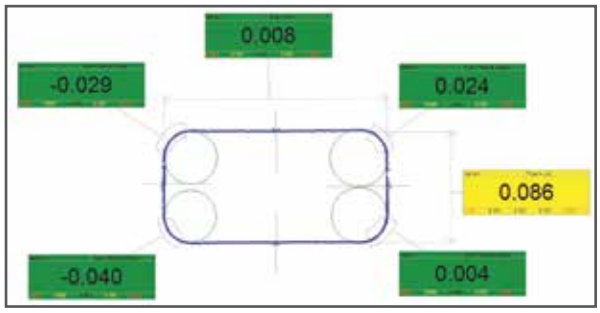

Technical Specifications

Parameter	Capability
Accuracy[1]	0.045% of FOV (Field of View)
Static Repeatability[2]	<0.03% of FOV
Thermal Stability[3]	< 0.03% of FOV/deg C
Warm-up Period[4]	10 minutes
Measurement Frequency (Framerate)[5]	Up to 20 Hz
Outputs	24 VDC Relay Outputs; 0~10VDC Analog Output; others available upon request
External Communication/Interface	Modbus TCP; OPC Server; API provided; other protocols available upon request
Data Storage	Relational Database, .txt file
Measurement Triggering	Clock frequency (Time-based); Encoder (length-based); Digital Signal
Laser Class	IEC 60825-1 Class 3R
Power Requirements	110~240 VAC, 5A
Operating Temperature[6]	0°~45°C (32°~113°F)
Humidity	0~95% Non-Condensing
Sensor Communication Platform	Ethernet
PC Operating System	Windows® 10/7 (32- or 64-bit)
Max. Dimensions and Weight: 30, 50, 75 and 100mm FOV Systems (1", 2", 3" and 4" FOV Systems)	550 (H) x 525 (W) x 290mm (D); 30kg [21.7 (H) x 20.7 (W) x 15.2" (D); 55lbs] 313mm (12.3") from mounting surface to center of FOV
Max. Dimensions and Weight: 175mm FOV Systems (6" FOV Systems)	885 (H) x 770 (W) x 385mm (D); 53kg [34.8 (H) x 30.3 (W) x 15.2" (D); 115lbs] 500mm (19.7") from mounting surface to center of FOV

1. Accuracy is representative of the system's error in measuring a known value. It is expressed as the Bias in a series of measurements of a certified gage block.
2. Repeatability is representative of the system's ability to monitor process variation. It is expressed as the three-sigma standard deviation in a series of measurements of a known gage block. (Repeatability and Accuracy are based on 2012 standardized test procedure. Field results may be better or worse depending on caliper type, size, and placement. This is the variation taken over a short time period in a room temperature environment, for a product that is static in the field of view.
3. This is the amount of measurement variation that might be observed for each degree change in ambient temperature.
4. This is the minimum amount of time that should be allowed for the system to reach measurement stability.
5. A measure of profiles scanned per second. Max framerate may vary depending on number of sensors in system and PC specifications.
6. Please note that process-related heat can affect the ambient temperature around the sensors. An optional cooling system can be provided in environments where the sensor temperature approaches or exceeds the stated limits

Industrial Mobility Package

The Profile360™ Industrial Mobility Package has been employed by large extrusion operations during line set-up so that one unit can serve multiple lines. The in-line measurement provides instant information to help the operator tune-in the extruder, calibrator, and down-stream equipment, and to assure all dimensions are stable before moving on to the next line.

Industrial Mobility Package with C-Frame System

Software

Profile360™ Software provides:

- Matching and comparison of measured profile to a CAD template.
- Caliper-based utilities to program each profile design for specific measurements.
- Storage of design library on local or networked drive.
- Display of all real-time measurement data.
- Display of trend data.
- Data logging for all measurement results.
- Standard report printing.
- Software can be installed on any network PC and connected to the instrument to view the real-time data.

Software Features			
Data Matching	Match profile to CAD template Anchor profile to multiple datums Match to user-defined sub-regions Match multiple profiles independently	Available Measurements	Thickness Width/Height Angle Area Radius Diameter (Max, Min, Avg) Ovality Circumference Distance to point in space Distance to specific feature (such as a groove in the profile Distance of any surface from its nominal/theoretical position
Display	Measured values with pass/fail/warning status Error from nominal Cp and Cpk Standard deviation Trend charts Histograms Overlay of measured profile onto CAD template Error vectors to show differences from CAD template Averaged or median-filtered values over specified time		
		Registration	Quick recalibration to certified gage pins
Report Writer	Charts List Exceptions summary Start and end times of run	Data Logging	Log caliper values to history file Save point cloud to .txt Save SnapShots to history file
		External Device Interface	OPC Server Modbus TCP client

Starrett-Bytewise is excited to announce that we have partnered with Inductive Automation, developers of the Ignition® platform, to provide many enhancements to our own Profile360 software. Ignition provides the ability to create custom HMIs, reports, and view real-time or historical measurement data. Ignition also saves data from the Profile360 software to an ODBC compliant database. The use of Ignition further unlocks the potential of the Industrial Internet of Things (IIoT) and Industry 4.0 applications

Version 3.0 with Ignition® offers several options to meet the data needs of our customers. The Basic Package includes screens to visualize:

- Real-time and historical trend charts by run
- Alarm charts and alarm summaries for your out-of-spec conditions
- Data logs with summary statistics for each run
- List of runs filtered by run number or time

You may also choose to upgrade your package with add-on modules for:

- SPC Charts and Statistics
- Alarm Notification by Email
- Advanced Reporting Capabilities providing flexibility in format, triggers, and distribution of reports
- Mobile Access from a phone or tablet

Tire Industry

Guide to Technology

At Starrett-Bytewise, we employ three types of sensor technologies: fixed point laser, displacement sensors, CrossCheck low-speed laser line sensors, and CrossCheckHD high-speed laser line sensors. All laser line sensors are designed and built by Starrett-Bytewise.

CrossCheck Sensors project a laser line across a profile, digitize the image, and transform the image into a geometric coordinate system. Multi-sensor systems acquire thousands of data points around the profile and match them to a CAD template, where key measurement parameters are extracted.

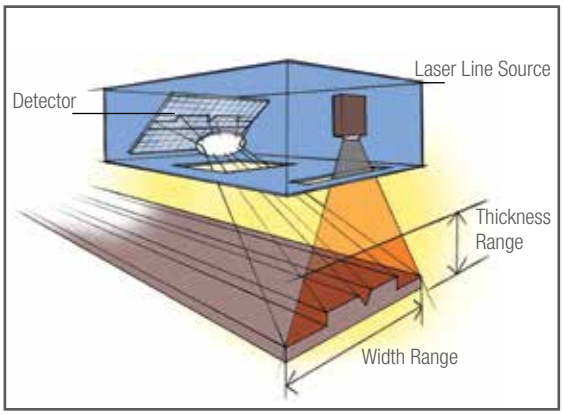

Component Preparation		
Tread and Sidewall Extrusion	**Calendar**	**Apex Extrusion**
On-Line Profilometer	Gum Calendar Monitor	Profile360™ On-Line Profile Measurement System
Off-Line Profilometer	Overlapping Ply Splice Monitor	
Profilometer 3D		
Off-Line Profilometer SL	CrossCheck Width	
Tire Building		
Carcass Drum	**Belt/Tread Drum**	**Shaping Drum**
Overlapping Inner Liner and Body Ply Splice Monitor	CrossCheck Belt Edge and Dog-Ear Splice Monitor	GTU Radial Runout and Lateral Runout Monitor
GTU Diagnostic System	GTU Diagnostic System	GTU Diagnostic System
Tire Development and Testing		
Tread Wear	**Tire Profile**	**Sidewall Profile**
Tire360		
CTWIST - Circumferential Tread Wear Imaging System	Bead-to-Bead Tire Profile Measurement System	GEO-360

CrossCheck

CrossCheck™ Special Applications

Easy to use CrossCheck "shape tools" measure radius/diameter, height, width, angle, and location. Master Profile Comparison provides Pass/Fail testing for contours, and makes small variations easily visible. All for less than the price of a single point laser sensor. CrossCheck is ideal for OEMs who need a fully designed, calibrated, and environmentally sealed 3D laser machine vision solution.

- CrossCheck's affordability and simplicity bring profile measurement to the entire organization
- R&D: Reverse Engineering
- Engineering: Design Validation
- Production: Monitor and control
- Quality: Process Studies
- Maintenance: Set Up and Adjustment

On-Line Profilometer (OLP)

Tread profile geometry has a strong influence on the cured tire uniformity. Treads that are non-symmetrical produce cured tires with uniformity and balance problems. Over-sized treads are a waste of materials. In order to assure the most precise tread and sidewall extrusion quality, tire makers worldwide have adopted the On-Line Profilometer (OLP) as their standard for extrusion monitoring. The On-Line Profilometer (OLP) provides automatic, high speed, non-contact measurement of tread and sidewall extrusions. OLP outperforms scanning systems by collecting an instantaneous cross-section profile rather than measuring in a zigzag pattern.

OLP can be installed after the die exit to monitor and alarm when key dimensions exceed the allowable tolerances. Dimension changes at the die often indicate changes in rubber visco-elastic properties or changes in the equipment set-up. When dimensions change, the operator is alerted to intervene. Early intervention can lead to faster startup, reduced rework, better production rates, and better tread uniformity.

OLP can also be installed after cooling to make 100% quality inspection of all treads before they are released to the tire building operation. This enables the QC organization to compare the current run to the historical standards, to pass or fail each run, and to maintain an audit trail for each lot.

Uses

- Use OLP at the die during the startup of any run to assist in reducing the time required to reach stability
- Use OLP at the die to continuously monitor the dimensional quality of any profile, and alarm the operator when any problem occurs
- Use OLP at the die to immediately recognize changes in die swell associated with batch change so that the operator can adjust the extruder settings
- Use OLP after cooling to produce data histories to compare any run with its historical performance and verify the effect of quality improvement initiatives
- Use OLP after cooling to check for die wear
- Use OLP data alongside other process data such as material theology, extruder die head pressure, screw RPM, screw power, and various temperatures to develop better knowledge of the complex interactions between materials, process set-points, and profile geometry

OLP

Specifications

	Measurement Range							
	Thickness (in)	Width (in)			Thickness (mm)	Width (mm)		
	2.36	11.81	17.72	23.62	60	300	450	600
Absolute Accuracy[1]	.003	.012	.012	.012	±0.075	0.30	0.30	0.30
Relative Accuracy[2]	.001	.004	.004	.004	0.0225	0.09	0.09	0.09
Gage Repeatability[3]	.001" (0.025mm)							
Resolution[4]	.00004" (0.001mm)							
Measurement Rate	Selectable up to 7.5 profiles/second							
Outputs	Analog and Digital I/O; Ethernet (Modbus TCP, Text over TCP); tab-delimited .txt measure log							
Laser Classification	IIIa CDRH, 3R IEC							

1. Absolute Accuracy: The average error of all dimensions of a certified gage block using the mean of 75 consecutive measurements. Error is defined as the difference between the OLP measured value and the certified target value.
2. Relative Accuracy: The maximum amount of error present when comparing successive measurements of a target with changing dimensions and located at a fixed position within the field of view (This also can be considered as "accuracy in measuring product variation.").
3. Gage Repeatability: An offline assessment calculating the standard deviation of the thickness of a certified gage block over 75 measurements.
4. Resolution: The smallest meaningful unit of measurement that is reported by the system.

Off-Line Profilometer 3D (3DP)

The Profilometer3D is the third-generation offline Profilometer from Starrett-Bytewise, and comes after 20 years of product experience. Profilometer3D is used to verify the accuracy of newly-cut dies by checking the extrusion dimensions. Its accuracy and speed helps reduce the number of die trials needed to approve a new die for production. Once the die is in production, Profilometer3D is used to check each run for overall quality, and to monitor for die wear. Under ideal conditions it is favorable to run tread extrusions so that the three main parameters – thickness, width and weight, are as near as possible to the lower control limits. This reduces the cost of the compound consumed. In practice extrusion lines normally operate with some if not all parameters above the limits. Since the tread measurements are used to tune the die dimensions, reductions to measurement uncertainty directly relate to improved die accuracy, which translates into less "running heavy".

Profilometer3D is built on a monolithic granite superstructure in the "Academy Black" granite fabricated by Starrett Tru-Stone Technologies. This granite was selected due to its excellent properties for machinability, flatness, and coefficient of thermal expansion. Sensors are mounted to servo-motor controlled traversing slides mounted top and bottom. Linear travel is encoded to 5µm intervals. Profilometer3D is positioned on a wheel cart with locking casters.

Parameter	µm
Thickness Error of Measure (bias + 3σ)	25
Thickness Bias (typical)	15
Thickness Repeatability (typical) 1σ	3.3
Width Error of Measure (bias + 3σ)	250
Width Bias (typical)	100
Width Repeatability (typical) 1σ	50

Measurement Capability

No measurement system is exact, and all measurement systems have some degree of uncertainty, or error. We characterize measurement uncertainty by the Error of Measure method (EoM). EoM characterizes the inherent variation or capability of the equipment itself without regard to contributions from external sources. EoM is a means to express the capability of the measurement system that includes both the bias and repeatability components of variation. EoM encompasses the 99% confidence interval.

Error of Measure (EoM) is representative of the system's error in measuring a known value. It is calculated as the absolute value of the Bias plus 3σ for the measurement series. EoM is reported as two values - one for thickness and one for width.

Bias is the average error from the known value. It is calculated as the absolute value of the average measurement minus the known value.

Repeatability is representative of the system's ability to monitor process variation. It is calculated as the range (maximum minus minimum) divided by 6, and expressed as the 1-sigma standard deviation of the measurement series.

Even if the measurement uncertainty is zero, there is measurand uncertainty – the uncertainty in how well the sample measured represents the overall tread. As measurement uncertainty approaches zero, the measurand uncertainty can become the main source of variation. Profilometer3D acquires 512 tracks across 25mm width. This permits one to assess an area wide enough to average out variations and edge artifacts, something that can't be done with a single track area of interest.

Sensor Technology

Profilometer3D utilizes CrossCheck2T line laser sensors. These sensors project a laser line across the tread, and view the laser line with two CMOS cameras, one each side of the laser line. The resulting images are transformed into dimensional coordinates using triangulation methods. The two images are combined so that any data lost due to triangulation blockage of one camera can be augmented by data from the other camera. CrossCheck2T sensors employ high-speed CMOS detectors that run at frequencies 1,000 Hz and higher. The Starrett-Bytewise CMOS-based sensors were introduced in 2002 and there are over 3,000 sensors in use.

Self-Calibration

A multi-step certified gage block is mounted at the start position. At the beginning of each scan the gage block is measured. If the gage block measurements are inside the allowable range the measurement cycle is executed using the current calibration values. If the gage block measurement is outside the allowable tolerance the calibration offset is automatically adjusted. This means that the system is self-calibrating. This self-calibration compensates for error due primarily to temperature change in the environment. The gage block spans the entire width of the laser line. The calibration adjustments can be set to update automatically or to prompt the user to accept the changes. We log all calibration changes along with the temperature in the top and bottom chambers.

Off-Line Profilometer (OFLP)

Tread and sidewall extrusions can be no more precise than the dies used to make them. When a new die is cut it should be well-centered, so the Operator has the flexibility to optimize the extruder set-up. After some time in service, die wear can be uneven so that certain areas along the profile get excessive rubber flow. This is a very costly waste of raw materials. Unbalanced flow can also disrupt the symmetry of the tread - a factor that influences cured tire uniformity and balance.

The Profilometer was developed as an automated, non-contact measurement system to displace checking with hand tools. The Profilometer is used to verify the accuracy of newly-cut dies. Its accuracy and speed helps reduce the number of die trials needed to approve a new die for production. Once in production, the Profilometer is used to check each run for overall quality, and to monitor for die wear.

Specifications		
Measurement Parameter	**Car Tire Model**	**Truck Tire Model**
Thickness Measurement Range	30mm	60mm
Width Measurement Range	600mm	900mm
Gage Repeatability on Flat Surfaces	<0.0125mm	<0.025mm
Gage Accuracy on Flat Surface	<0.060mm	<0.060mm
Area Calculation Repeatability	<.25%	<.25%
Area Calculation Accuracy	<.25%	<.25%
Sample Interval (Width Resolution)	0.1mm	0.1mm
Measurement Spot Size	0.3mm	0.3mm
Dimensions (W x D x H)	1225 x 775 x 1400mm	1524 x 775 x 1400mm

Features and Specifications

- Visual display overlays the measurement onto the specified design
- Point and gage analysis measures the thickness and width of each breakpoint
- Conicity analysis compares the right and left extrusion halves
- Regional analysis reports the area and center of gravity for each region
- Statistical analysis allows export of data for analysis in spreadsheet applications
- Experienced users report that fewer die trials are needed, conserving time and raw materials
- Dies can be designed to increasingly tighter tolerances for materials that are more difficult to extrude uniformly

Off-Line Profilometer (OFLP)

Off-Line Profilometer SL

The Profilometer SL (PSL) combines the CrossCheck™ Line Laser Sensor technology with our proven Profilometer software platform to produce a low cost, reliable, and accurate tread and sidewall extrusion measurement system. PSL is an all-in-one package, with C-Frame, PC, and electronics combined into a mobile cart. PSL is non-contacting and has no moving parts, so reliability is uncommonly high. The measurement is instantaneous, so there is no waiting for results. With this new instant-scan capability and portability, geometry checks on tire components can be performed quickly at any location in the factory.

Specifications	
Measurement Parameter	
Thickness Measurement Range	60mm
Width Measurement Range	300mm (4 sensors 450mm (6 sensors)
Gage Repeatability of Flat Surfaces	<0.025mm
Gage Accuracy on Flat Surfaces	0.075mm
Area Calculation Repeatability	<0.25%
Area Calculation Accuracy	<0.25%
Sample Interval (Width Resolution)	0.1mm
Scan Speed	Instantaneous
Dimensions (W x L x H)	77cm x 110cm x 104cm (excluding LCD monitor)
Laser Classification	IIIa CDRH, 3R IEC

Features and Specifications

- No moving parts
- Instantaneous cycle time
- Portable
- Visual display overlays the measurement onto the specified design
- Point and gage analysis measures the thickness and width of each breakpoint
- Conicity analysis compares the right and left extrusion halves
- Regional analysis reports the area and center of gravity for each region
- Statistical analysis allows export of data for analysis in spreadsheet applications
- Experienced users report that fewer die trials are needed, conserving time and raw materials
- Dies can be designed to increasingly tighter tolerances for materials that are more difficult to extrude uniformly

Off-Line Profilometer PL (PSL)

Profile360™ for Apex Extrusion

Profile360 is an in-line, real-time measurement system for continuously monitoring key profile dimensions in complex profile extrusions. Profile360 employs CrossCheck™ Line Laser Sensors manufactured by Starrett-Bytewise. These multi-sensor systems acquire thousands of data points around the profile and match them to a CAD template, where key measurement parameters such as width, thickness, radius, and angle are extracted. Measurement parameters are compared to allowable control limits and displayed on the operator's terminal with a green/yellow/red (pass/caution/fail) status indicator. Profile360 runs at rates up to 14 profiles per second.

Specifications	
Measurement Rate	Selectable up to 14 profiles/second
Communication Interface	Analog and Digital Outputs; Ethernet
Run Modes	Clock Frequency or Encoder
Data Output	Modbus TCP or OPC Server native; conversion to other platforms available
Operating Temperature	32 to 113 °F (0 to 45 °C); cooling systems available
Profile360 conforms to the Machinery Safety, Electromagnetic Compatibility, and Low Voltage directives of the EC	
Laser safety class by the CDRH standard is Class 3A, and the IEC 60825-1 classification is Class 3R	

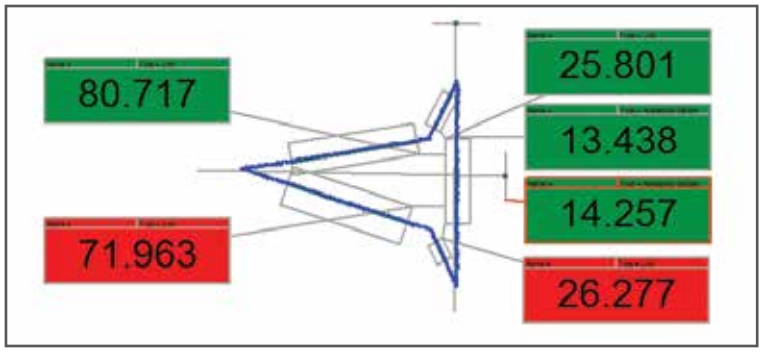

Profile360™ for Apex Extrusion

Tire360

WHAT DOES IT DO?

Tire makers routinely measure production tires as a means of quality checking. Tire360 is a 3D tire scanning system that measures parameters like crown radius, section width, section height, circumference, and location and height of tread wear indicators.

Tire360 can be used with our CTWIST tread wear analysis software. Tread wear testing is accomplished by scanning a tire sequentially during a wear test program. The CTWIST software module provides for the following analyses: tread depth profile, irregular wear, tread life prediction, tread loss profile and heel/toe wear.

WHY DOES IT MATTER?

Tire360 can improve your workflow and reduce labor for routine tire measurement. Production tires can be scanned in less than 10 seconds and automatically analyzed for test parameters like crown radius, section width, section height, circumference, and location and height of tread wear indicators.

Tire360 can greatly reduce the time needed for tire scanning in your tread-wear testing too. A test that takes 10 minutes with a fixed-point scanner can be done in 10 seconds! For a user checking tread wear for 10 vehicles per day the savings in testing labor is over 6 hours. That means 6 hours of additional driver productivity too - per day.

Tire scans can be permanently archived so you can go back and analyze tires after they have been shipped out.

HOW DOES IT WORK?

Tire360 is an off-line station that scans tires that have been pre-mounted on rims and inflated. The tire/rim assembly is manually mounted onto the spindle tooling. The machine rotates the spindle and scans the tire automatically.

The system utilizes CrossCheckHD™ sensors in a multi-sensor c-frame array. CrossCheckHD is a family of high speed line laser sensors manufactured by Starrett-Bytewise in Columbus, Georgia, USA. These are referred to by many other names – laser stripe sensors, sheet-of-light laser sensors, and laser profile sensors. HD designates the high data-density version that utilizes a high speed CMOS detector, produced according to our specification.

Each sensor projects a line of laser light across the tire surface, which is reflected back to the sensor through a lens and onto a CMOS detector where each profile is digitized. The digitized line is triangulated and converted to XY coordinates. A patented method is employed to transform, or stitch, the data sets into a common coordinate system

Tire360 covers a large range of tire sizes by mounting the measurement head on a two-stage slide with one radial axis radial and one lateral axis. Axes are manually positioned and lockable. The axes are encoded in order to capture the true radius and circumference.

Tire360 software combines the individual sensor data sets into a single bead-to-bead point-data file for each scan, and combines the data sets by associating the profiles to the encoder count. The data set is unfolded to visualize a 3D surface topography in a "false color map" with 16 colors spanning ±2mm. This color map is normalized using a filtering tool-set to remove low-frequency runout. A full-range scan consists of 16,000 columns and 7,500 rows of data. Each radial and lateral waveform can be displayed in the contour view window.

Tire360

GEO-360

- GEO-360 is a tire geometry measurement system for retrofit to tire uniformity machines and balancers.
- It has a rack and pinion drive system that can easily be customized for travel and height.
- Sensors are mounted on pivoting break-away hinges secured with ball detents.
- An air blow-off system reduces contamination on the sensor glass.

GEO-360

Measurement Parameters

- RRO and LRO
  - Peak-to-Peak
  - Composite
  - Harmonics 1 to 32 with angles
- Bulge and Depression – magnitude and angle top and bottom
- Wobble
- Section Width
- Tread Local RRO
- Open Cap Splice
- Circumference for each rib

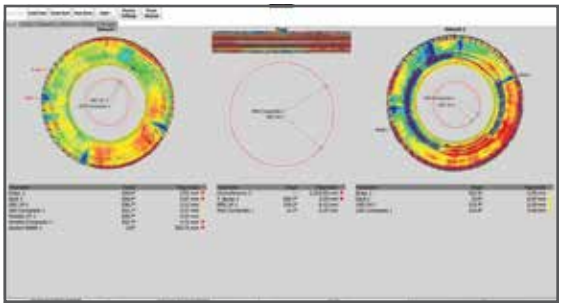

Results tab

Line Laser Sensors and Systems are designed and built by Starrett-Bytewise

How Sensors Work

A laser line is projected across the profile and the image is snapped by the detector, then the image data is converted to x+y coordinates.

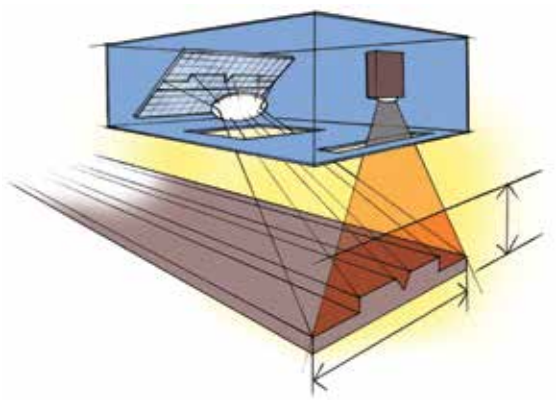

How Systems Work

Multiple sensors are mounted on a positioning system to acquire scans of tread and sidewalls.

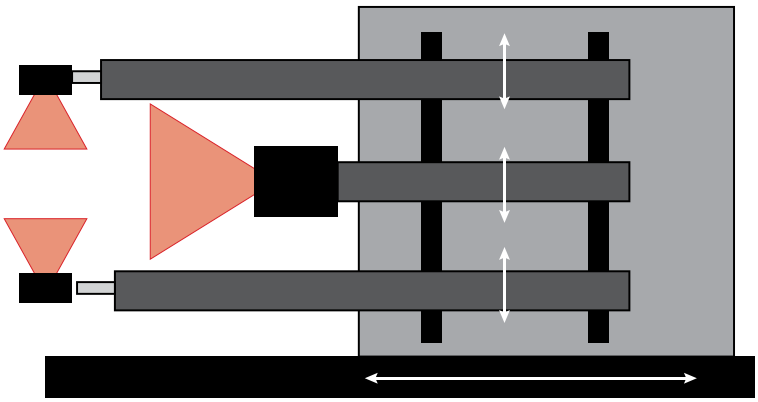

Green Tire Uniformity System (GTU)

Tire Building is the most complex operation in the tire factory. Multiple components are centered, applied, spliced, turned-up, inflated, and stitched. Component stock variations combine with machine variations to produce green tires with variations in radial runout, tread snaking, lateral runout, and splice quality. Green tires with the largest variations invariably produce tires with the worst cured tire uniformity and balance performance.

The Green Tire Uniformity System utilizes the CrossCheckHD™ Line Laser Sensor to scan green tires at any stage of production. The GTU Software has a suite of viewing and analysis tools for assessing all aspects of the green tire uniformity. The system is available in two configurations - portable and fixed.

The portable tripod-mounted version can be moved from drum-to-drum, and from machine-to-machine. This provides a way to thoroughly study the carcass, belt/tread package, and final shaped green tire for radial and lateral runout, tread snaking, and splice quality. This can be used by the Set-Up Technician to verify the TBM set-up, and can be used by the Uniformity Engineer to troubleshoot tires with uniformity problems.

The fix-mounted version provides a means to perform 100% inspection at any drum for any parameter. This is useful for understanding the population characteristics of green tire runouts and to alarm when limits are exceeded.

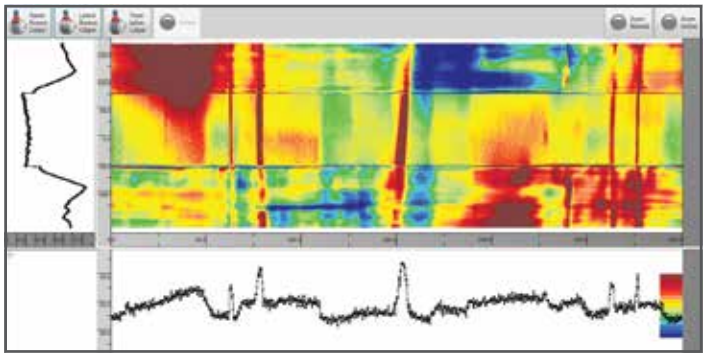

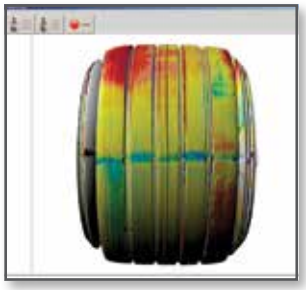

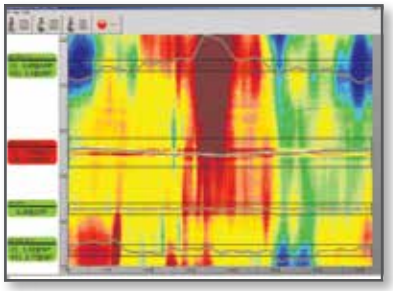

System Characteristics

- Start scan from keyboard.
- Start scan from relay contact.
- Scan with encoder count.
- Scan number of profiles.
- Scan from encoder start/stop.
- View runout color map.
- View 3D image.
- View circumferential waveform.
- View lateral waveform.
- View harmonics.
- Filter data.
- Rotate data.
- Crop data.
- Radial runout caliper.
- Lateral runout caliper.
- Tread splice caliper.
- Width caliper.
- Circumference caliper.
- Set pass/fail limits.
- Subtract layers.
- Export caliper waveform as .csv.
- Export point cloud as .csv.
- Portable system includes sensor, notebook PC, and carry case.
- Fix-Mounted System includes sensor, PC, and PLC interface module.

Integrated Shaping Drum System

Since RRO and LRO of the green tire have the strongest association with cured tire uniformity most agree that a check of the final shaped green tire provides the most comprehensive way to verify quality before sending the green tire to curing. This is done by integrating a single GTU sensor at the final shaping drum.

The parameters measured include LRO of the center groove, RRO, circumference and tread splice bulge. Runout values include harmonics and angles.

The software is optimized for a touchscreen operation. The Scan View tab shows a false-color map to display the runout topography. The bottom window displays the circumferential waveform and the left window displays the lateral waveform.

Integrated Carcass Drum System

Overlapping carcass splices have strong associations with cured-tire RRO/RFV. The carcass system detects the leading edge and trailing of each component, associates each to an encoder tick, and calculates the splice overlap. The system also detects slipping of the plys on the inner liner and compensates the splice measurement. The reported measurement is right and left side splice overlap.

Tread Wear Measurement System (CTWIST)

Tire designers are challenged to develop new tread patterns and compounds that deliver longer tread life and more uniform tread wear. Starrett-Bytewise partnered with Ford Motor Company and several leading OEM tire makers to develop CTWIST as a way to measure and characterize tread wear so the designers could better understand wear behavior. With the CTWIST process, new tires are scanned after break-in, then periodically scanned during the wear cycles. CTWIST predicts the tread life for each rib, and produces several tread wear reports to help the designer understand where improvements are needed.

CTWIST utilizes a non-contacting high-speed laser sensor to collect about 1,000,000 measuring points in less than 5 minutes.

Features

- Tread Depth Profile Report shows the tread depth profile for each wear cycle
- Heel/Toe Wear Report shows the heel-toe wear profile across the tread
- Irregular Wear Report shows a 3D color map of the tread loss
- Tread Loss Report shows the tread loss profile across the tread
- Tread Life Mileage Projection shows the predicted tread life of each rib

System Specifications	
Typical Measurement Time	5 minutes
Measurement Technology	Scanned Laser Triangulation
Measurement Range	32mm
Laser Standoff	180mm
Measurement Spot Diameter	0.1mm
Laser Classification	Class IIIb Gallium Arsenide
Laser Resolution	< 0.008mm
Data Signal	Digital with Invalid Data Signal
Data Points per Scan Line	4096
Senor Frequency	16kHz
Encoder	= 16,000 PPR
Typical Data File Size	1Mb
Compatible Tire Radius Range	200 to 625mm
Compatible Tire Widths	Up to 400mm
Maximum Tire and Wheel Assembly Weight	100kg
Maximum Tire Rotation Speed	120RPM
Machine Dimensions (W x D x H)	1000 x 1150 x 900mm

Tread Wear Measurement System

Bead-to-Bead Profile Measurement System

Tire and mold designers are tasked with creating new tire designs that meet strict dimensional requirements when the tire is inflated. The inflated growth is predicted using powerful CAD modeling software. The inflated tire is traditionally measured with hand tools to check compliance to the design target. Checking with hand tools is time consuming, imprecise, and operator dependent.

The Starrett-Bytewise Bead-to-Bead Measurement System (B2B) is a non-contact scanning system that provides instantaneous acquisition for tire profiles from one bead to the other, across both sidewalls and the tread. Data is rendered in a visual display. Drag and drop caliper tools enable easy measurement. The CAD model can be imported into the Bead-to-Bead software so that the actual profile can be overlaid to the design. Data can be exported back to the CAD system for further analysis.

Bead-to-Bead can scan tires rotating at high speed to measure centrifugal growth and deformation.

Features

- Acquires 4,000 or more data points per profile
- Acquires complete profiles in less than one second
- Profiles are rendered in a visual display and matched to a CAD template
- Profiles are analyzed with easy-to-use tools for section width, crown radius, and other parameters
- Data points are output in .dxf and .txt formats

Specifications	
Tire Size Capability	Various configurations to accommodate tire sizes ranging from passenger to truck and bus
Sensor Accuracy	0.15mm (based on standard sensors)
Measurement Accuracy*	0.15mm or 0.3mm
Triggering	Keyboard
Point Data Output Formats	DXF, TXT
Communication Interface	Digital and Analog I/O, Ethernet (Modbus TCP)
Laser Classification	IIIa

* Measurement accuracy will depend on whether the data required to complete the desired measurement comes from one or two sensors.

Bead-to-Bead Profile Measurement System

PRECISION GROUND FLAT STOCK AND DRILL ROD

Precision Flat Stock and Drill Rod

Cut costs and save time - make your own parts like these from Flat Stock

Precision Ground Flat Stock and Drill Rod

STANDARD AND OVERSIZE

Starrett Precision Ground Flat Stock and Drill Rod can save time in your shop … no more time hunting lost stock … no more slow, costly grinding to size. Just lay it out and saw it out and save valuable machinery, downtime and man hours.

- Machine parts
- Fixtures
- Parallels
- Dies
- Test gages
- Shims
- Stamps
- Templates
- Jigs
- Test tools
- Flat gages
- Punches
- Cutters
- Buttons

Six types of material in a complete range of sizes is available to meet your specific needs:

495 and 496 are (AISI 01) oil hardening tool steels. These steels are dimensionally stable and can be used for all intricate work, including work with thin sections, with a minimum danger of cracking.

497 and 499 are (AISI A2) 5% chromium air-hardening steel. These steels have high wear and abrasion resistance.

498 Low carbon steel is used where deep hardening is not necessary, although it can be carburized or case hardened.

344 is (AISI A6) a medium alloyed air hardening tool steel that provides an excellent balance of machinability, toughness and wear resistance.

W1 Carbon (Available only in Drill Rod) is (AISI/SAE W1) a versatile and less expensive carbon steel with excellent machinability, good wear resistance and toughness.

401 and 402 are (AISI D2) high chromium steel. These steels are for the highest wear resistance applications.

Packaging

Starrett Precision Ground Flat Stock is individually wrapped in brown paper and clearly marked with size dimensions, analysis and correct hardening and tempering information. Drill rods are bundled together and tagged with a description that includes the size and EDP number. Color coding by grade on the ends of each piece allows for easy identification.

Cut costs and save time - make your own parts like these from Drill Rod

Flat Stock Tolerances	
Standard:	Thickness ±.001" Widths Up through 8", +.000/.005" 9" and Over, +.000/.015" Squares, ±.001"
Oversize:	Thickness, +.010/.015" Width, +.010/.015" Squares, +.010/.015"
Length: Saw Cut Oversize to Allow for Finish Cutting	18", +1/4" 24", +1/2" 36", +5/8"
Squareness Edge All:	.003" Per Inch
Finish:	35 Microinch or Finer

Drill Rod Tolerances		
Size Range	**Diameter Tolerance**	**Length Tolerance**
.124" round and less	±.0003"	+1/8" - 0
.125" to .499"	±.0005"	
.500" to 2"	±.0010"	

Comparative Feature Properties

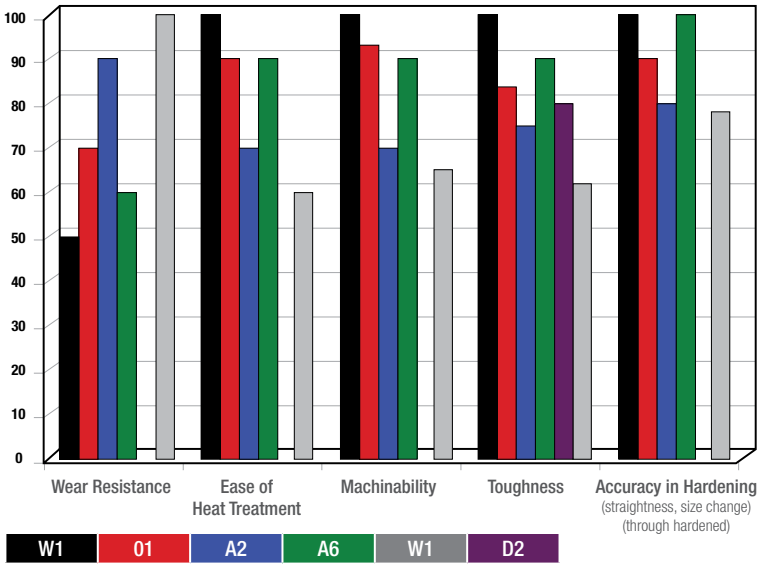

Precision Ground Flat Stock

496 Oil Hardening Precision Ground Flat Stock

STANDARD

495 Oil Hardening Precision Ground Flat Stock

OVERSIZE

- Stock is dimensionally stable – use it for the most intricate work
- Deep hardening characteristics and fine grain structure
- Machines freely – fully spheroidized, annealed
- Full length identification – eliminates confusion with other steels
- Starrett uses its own ground flat stock and die stock for many of its fine precision tool parts

Nominal Analysis (AISI 01)

Carbon	.90
Chromium	.50
Manganese	1.20
Tungsten	.50
Vanadium	.20

Size	Temperature	Quench	Rockwell C
All Sizes	1450º-1500º F	Oil	63-65

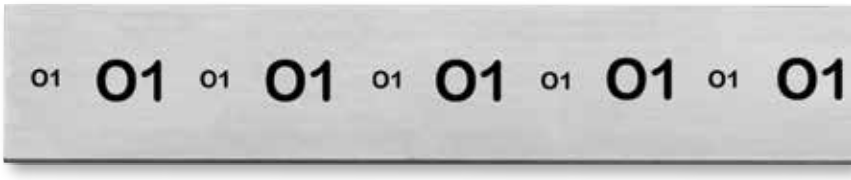

Specifications

Furnished in 18" and 36" lengths, ground straight and parallel.

Hardening

It is recommended that stock be heated uniformly to 1450º-1500º F and quenched in oil. Temperature of the quenching oil should be 120º-140º F for best results. Do not quench in water because this is an oil hardening steel.

Tempering

For maximum toughness, a tempering time of one hour at temperature is recommended. Use chart for selecting desired Rockwell C hardness and corresponding tempering temperature. The following may also be used as a guide depending on type of work.

Cutting Tools

- 300º-350º F (Light Straw)

Solid Punches and Dies

- 400º-450º F (Straw)

Spring Temper

- 750º-800º F (Blue)

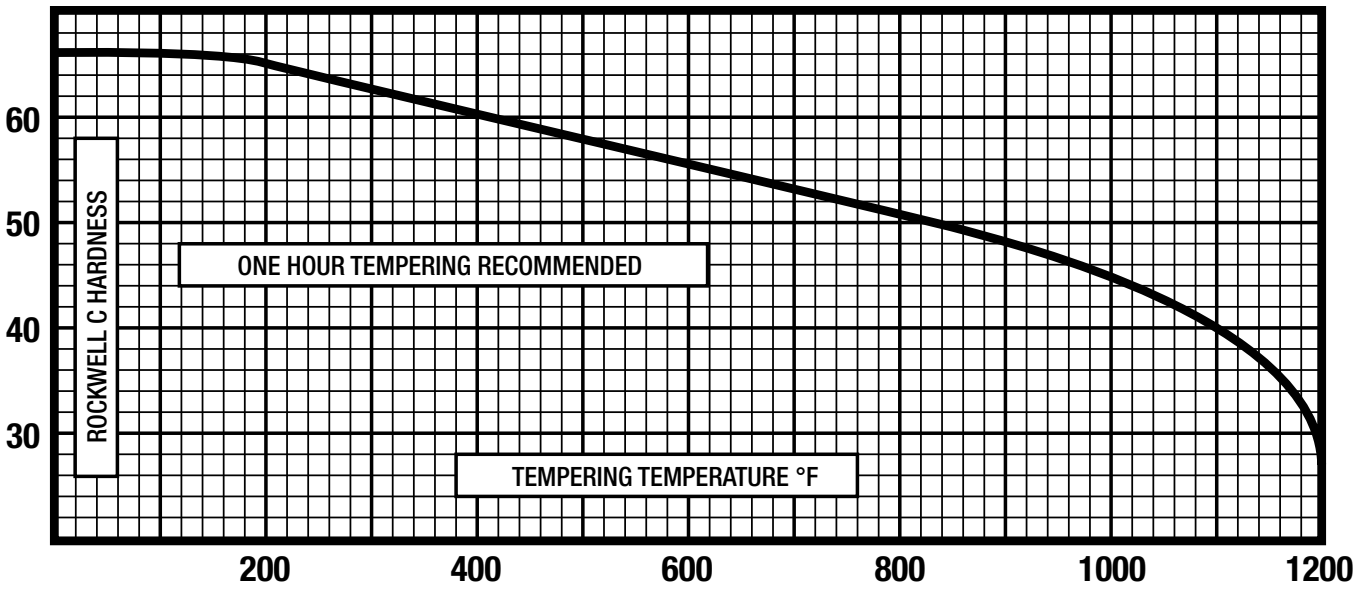

NOTE: Lengths, widths and thicknesses other than listed can also be quoted by request

Precision Ground Flat Stock

496 Oil Hardening Precision Ground Flat Stock

STANDARD TOLERANCE

496 Oil Hardening Precision Ground Flat Stock			
Thickness	Width	18" Length	36" Length
1/64"	1/2"	53924	59139
	3/4"	53925	
	1"	53926	
	1-1/4"	53927	
	1-1/2"	53928	
	2"	53929	59140
	2-1/2"	53930	
	3"	53931	
	4"	53932	59141
1/32"	1/2"	53933	58895
	3/4"	53934	59143
	1"	53935	59144
	1-1/4"	53936	
	1-1/2"	53937	59145
	2"	53938	58901
	2-1/2"	53939	
	3"	53940	59147
	4"	53941	59148
	6"	53942	
3/64"	1/2"	53943	59149
	3/4"	53944	59150
	1"	53945	58902
	1-1/4"	53946	59171
	1-1/2"	53947	57685
	2"	53948	59152
	2-1/2"	53949	
	3"	53950	
	3-1/2"	53951	
	4"	53952	59153
	6"	53953	
1/16"	1/4"	57226	58891
	3/8"	57227	
	1/2"	53954	54257
	3/4"	53955	54258
	1"	53956	54259
	1-1/4"	53957	54260
	1-1/2"	53958	54261
	1-3/4"	53959	54262
	2"	53960	54263
	2-1/2"	53961	54264
	3"	53962	54265
	3-1/2"	53963	54266
	4"	53964	54267
	5"	53965	54268
	6"	53966	54269
	8"	53967	57236
	10"	53968	57237
5/64"	1/2"	53969	54270
	3/4"	53970	58905
	1"	53971	58890
	1-1/2"	53972	
	2"	53973	
	2-1/2"	53974	
	3"	53975	
	4"	53976	
	6"	53977	

496 Oil Hardening Precision Ground Flat Stock			
Thickness	Width	18" Length	36" Length
3/32"	1/4"		58899
	3/8	58903	
	1/2"	53978	54279
	3/4"	53979	54280
	1"	53980	54281
	1-1/4"	53981	54282
	1-1/2"	53982	54283
	2"	53983	54284
	2-1/2"	53984	54285
	3"	53985	54286
	4"	53986	54287
	5"	53987	54288
	6"	53988	54289
	8"	53989	57682
7/64"	1/2"	53990	
	3/4"	53991	
	1"	53992	
	1-1/4"	53993	
	1-1/2"	53994	
	2"	53995	
	3"	53996	
	4"	53997	
1/8"	1/8"	53998	59154
	1/4"	57228	58894
	5/16"	59127	58897
	3/8"	57229	58892
	1/2"	53999	54298
	5/8"	54000	54299
	3/4"	54001	54300
	1"	54002	54301
	1-1/4"	54003	54302
	1-1/2"	54004	54303
	1-3/4"	54005	54304
	2"	54006	54305
	2-1/2"	54007	54306
	3"	54008	54307
	3-1/2"	54009	54308
	4"	54010	54309
	4-1/2"	54011	54310
	5"	54012	54311
	6"	54013	54312
	7"	54014	54313
	8"	54015	54314
	10"	54016	54315
	12"	54017	54316
	14"	54018	57238
9/64"	9/64"	54019	
	1/2"	54020	
	3/4"	54021	
	1"	54022	
	1-1/2"	54023	
	2"	54024	
	3"	54025	
	4"	54026	
5/32"	5/32"	54027	
	1/2"	54028	54324
	3/4"	54029	54325
	1"	54030	54326
	1-1/4"	54031	54327
	1-1/2"	54032	54328

496 Oil Hardening Precision Ground Flat Stock			
Thickness	Width	18" Length	36" Length
5/32"	1-3/4"	54033	54329
	2"	54034	54330
	2-1/2"	54035	54331
	3"	54036	54332
	3-1/2"	54037	54333
	4"	54038	54334
	5"	54039	54335
	6"	54040	54336
	8"	54041	54337
3/16"	3/16"	54042	59157
	1/4"	57230	
	3/8"	57231	
	1/2"	54043	54338
	3/4"	54044	54339
	1"	54045	54340
	1-1/4"	54046	54341
	1-1/2"	54047	54342
	1-3/4"	54048	54343
	2"	54049	54344
	2-1/2"	54050	54345
	3"	54051	54346
	3-1/2"	54052	54347
	4"	54053	54348
	5"	54054	54349
	6"	54055	54350
	8"	54056	54351
	10"	54057	54352
7/32"	7/32"	54058	
	1/2"	54059	54353
	3/4"	54060	54354
	1"	54061	54355
	1-1/4"	54062	54356
	1-1/2"	54063	54357
	2"	54064	54358
	3"	54065	54359
	4"	54066	54360
	6"	54067	
1/4"	1/4"	54068	56517
	3/8"	54069	58900
	1/2"	54070	54362
	5/8"	58904	58893
	3/4"	54071	54363
	1"	54072	54364
	1-1/4"	54073	54365
	1-1/2"	54074	54366
	1-3/4"	54075	54367
	2"	54076	54368
	2-1/2"	54077	54369
	3"	54078	54370
	3-1/2"	54079	54371
	4"	54080	54372
	4-1/2"	54081	54373
	5"	54082	54374
	5-1/2"	54083	54375
	6"	54084	54376
	7"	54085	54377
	8"	54086	54378
	10"	54087	54379
	12"	54088	54380
	14"	54089	57239

Sizes other than listed priced on application

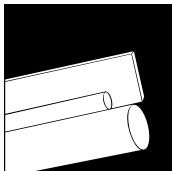

Precision Ground Flat Stock

496 Oil Hardening Precision Ground Flat Stock

STANDARD TOLERANCE (CONTINUED)

496 Oil Hardening Precision Ground Flat Stock			
Thickness	Width	18" Length	36" Length
9/32"	9/32"	54090	
	1/2"	54091	
	3/4"	54092	
	1"	54093	
	1-1/4"	54094	
	1-1/2"	54095	
	2"	54096	
	2-1/2"	54097	
	3"	54098	
	4"	54099	
	6"	54100	54390
5/16"	5/16"	54101	54391
	3/8"	57232	
	1/2"	54102	54392
	5/8"		58896
	3/4"	54103	54393
	1"	54104	54394
	1-1/4"	54105	54395
	1-1/2"	54106	54396
	1-3/4"	57233	57240
	2"	54107	54397
	2-1/2"	54108	54398
	3"	54109	54399
	3-1/2"	54110	54400
	4"	54111	54401
	4-1/2"	54112	54402
	5"	54113	54403
	6"	54114	54404
	8"	54115	54405
3/8"	3/8"	54116	54406
	1/2"	54117	54407
	5/8"		58898
	3/4"	54118	54408
	1"	54119	54409
	1-1/4"	54120	54410
	1-1/2"	54121	54411
	1-3/4"	54122	54412
	2"	54123	54413
	2-1/2"	54124	54414
	3"	54125	54415
	3-1/2"	54126	54416
	4"	54127	54417
	4-1/2"	54128	54418
	5"	54129	54419
	5-1/2"	54130	54420
	6"	54131	54421
	7"	54132	54422
	8"	54133	54423
	10"	54134	54424
	12"	54135	54425
7/16"	7/16"	54136	54426
	1/2"	54137	54427
	3/4"	54138	54428
	1"	54139	54429
	1-1/4"	54140	54430
	1-1/2"	54141	54431
	2"	54142	54432
	2-1/2"	54143	54433
	3"	54144	54434
	4"	54145	54435
	6"	54146	54436

496 Oil Hardening Precision Ground Flat Stock			
Thickness	Width	18" Length	36" Length
1/2"	1/2"	54147	54437
	5/8"	54148	54438
	3/4"	54149	54439
	1"	54150	54440
	1-1/4"	54151	54441
	1-1/2"	54152	54442
	1-3/4"	57234	57241
	2"	54153	54443
	2-1/2"	54154	54444
	3"	54155	54445
	3-1/2"	54156	54446
	4"	54157	54447
	4-1/2"	54158	54448
	5"	54159	54449
	6"	54160	54450
	7"	54161	54451
	8"	54162	54452
	10"	54163	54453
	12"	54164	59159
	14"	54165	
9/16"	9/16"	54166	54455
	3/4"	54167	54456
	1"	54168	54457
	1-1/4"	54169	54458
	1-1/2"	54170	54459
	2"	54171	54460
5/8"	5/8"	54172	54461
	3/4"	54173	54462
	1"	54174	54463
	1-1/4"	54175	54464
	1-1/2"	54176	54465
	2"	54177	54466
	2-1/2"	54178	54467
	3"	54179	54468
	3-1/2"	54180	54469
	4"	54181	54470
	5"	54182	54471
	6"	54183	54472
	8"	54185	54474
	10"	54186	54475
	12"	57235	57242
3/4"	3/4"	54187	54476
	1"	54188	54477
	1-1/4"	54189	54478
	1-1/2"	54190	54479
	2"	54191	54480
	2-1/2"	54192	54481
	3"	54193	54482
	3-1/2"	54194	54483
	4"	54195	54484
	4-1/2"	54196	54485
	5"	54197	54486
	6"	54198	54487
	8"	54199	54488
	10"	54200	54489
	12"	54201	54490

496 Oil Hardening Precision Ground Flat Stock			
Thickness	Width	18" Length	36" Length
7/8"	7/8"	54202	54491
	1"	54203	54492
	1-1/4"	54204	54493
	1-1/2"	54205	54494
	2"	54206	54495
	2-1/2"	54207	54496
	3"	54208	54497
	4"	54209	54498
	6"	54210	54499
1"	1"	54211	54500
	1-1/4"	54212	54501
	1-1/2"	54213	54502
	2"	54214	54503
	2-1/2"	54215	54504
	3"	54216	54505
	3-1/2"	54217	54506
	4"	54218	54507
	4-1/2"	54219	54508
	5"	54220	54509
	6"	54221	54510
	8"	54222	54511
	10"	54223	54512
	12"	54224	54513
1-1/8"	1-1/2"	54225	54514
	2"	54226	54515
	3"	54227	54516
	4"	54228	54517
	6"	54229	54518
1-1/4"	1-1/4"	54230	54519
	1-1/2"	54231	54520
	2"	54232	54521
	2-1/2"	54233	54522
	3"	54234	54523
	4"	54235	54524
	5"	54236	54525
	6"	54237	54526
	8"	54238	54527
	10"	54239	54528
1-1/2"	1-1/2"	54240	54529
	2"	54241	54530
	2-1/2"	54242	54531
	3"	54243	54532
	3-1/2"	54244	54533
	4"	54245	54534
	5"	54246	54535
	6"	54247	54536
	8"	54248	54537
	10"	54249	54538
	12"	59189	
2"	2"	54250	54539
	3"	54251	54540
	4"	54252	54541
	6"	54253	54542

Sizes other than listed priced on application

Precision Ground Flat Stock

495 Oil Hardening Precision Ground Flat Stock

OVERSIZE TOLERANCE

495 Oil Hardening Ground Flat Stock			
Thickness	Width	18" Length	36" Length
3/16"	3/16"	56957	57677
	1/2"	56958	56813
	3/4"	56959	56814
	1"	56960	56815
	1-1/4"	56961	56816
	1-1/2"	56962	56817
	2"	56963	56818
	2-1/2"	56964	56819
	3"	56965	56820
	4"	56966	56821
	5"	56967	
	6"	56968	56822
	8"	56969	
	10"	56970	
1/4"	1/4"	56971	57678
	1/2"	56972	56823
	3/4"	56973	56824
	1"	56974	56825
	1-1/4"	56975	56826
	1-1/2"	56976	56827
	1-3/4"	56977	
	2"	56978	56828
	2-1/2"	56979	56829
	3"	56980	56830
	3-1/2"	56981	56831
	4"	56982	56832
	4-1/2"	56983	
	5"	56984	56833
	6"	56985	56834
	8"	56986	
5/16"	5/16"	56987	
	1/2"	56988	56835
	3/4"	56989	56836
	1"	56990	56837
	1-1/4"	56991	56838
	1-1/2"	56992	56839
	2"	56993	56840
	2-1/2"	56994	56841
	3"	56995	56842
	4"	56996	56843
	5"	56997	56844
	6"		56845
3/8"	3/8"	56998	57679
	1/2"	56999	56846
	3/4"	57000	56847
	1"	57001	56848
	1-1/4"	57002	56849
	1-1/2"	57003	56850
	2"	57004	56851
	2-1/2"	57005	56852
	3"	57006	56853
	3-1/2"	57007	
	4"	57008	56854
	4-1/2"	57009	
	5"	57010	56855
	6"	57011	56856
	8"	57012	56857
	12"	57013	

495 Oil Hardening Ground Flat Stock			
Thickness	Width	18" Length	36" Length
1/2"	1/2"	57014	56858
	3/4"	57015	56859
	1"	57016	56860
	1-1/4"	57017	56861
	1-1/2"	57018	56862
	2"	57019	56863
	2-1/2"	57020	56864
	3"	57021	56865
	3-1/2"	57022	
	4"	57023	56866
	4-1/2"	57024	
	5"	57025	56867
	6"	57026	56868
	8"	57027	56869
	10"	57028	56870
	12"	57029	
5/8"	5/8"	57030	56871
	3/4"	57031	57680
	1"	57032	56872
	1-1/4"	57033	56873
	1-1/2"	57034	56874
	2"	57035	56875
	2-1/2"	57036	56876
	3"	57037	56877
	3-1/2"	57038	
	4"	57039	56878
	5"	57040	56879
	6"	57041	56880
3/4"	3/4"	57042	56881
	1"	57043	56882
	1-1/4"	57044	
	1-1/2"	57045	56883
	2"	57046	56884
	2-1/2"	57047	56885
	3"	57048	56886
	3-1/2"	57049	
	4"	57050	56887
	5"	57051	
	6"	57052	56888
	8"	57053	
1"	1"	57054	56889
	1-1/4"	57055	57681
	1-1/2"	57056	56890
	2"	57057	56891
	2-1/2"	57058	56892
	3"	57059	56893
	3-1/2"	57060	
	4"	57061	56894
	5"	57062	
	6"	57063	56895

Sizes other than listed priced on application

Precision Ground Flat Stock

497 Air Hardening Precision Ground Flat Stock

STANDARD

499 Air Hardening Precision Ground Flat Stock

OVERSIZE

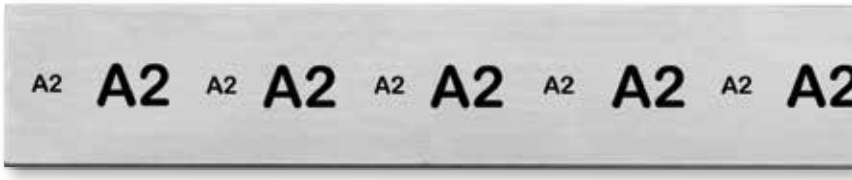

Dimensionally stable

- The 5% chromium content makes this steel especially desirable for punches and dies to be used in long production runs since it gives the tools far longer life. Up to 50% more pieces per sharpening can be produced than with oil hardening steel.
- High wear resistance is also ideal for punches and dies to stamp silicon, stainless steels, monel metal and other types of abrasive material
- Maintains close dimensional accuracy throughout the heat treating process. The wide 75º hardening range make this virtually foolproof.
- Full-length identification eliminates confusion with other steels
- Starrett uses its own ground flat stock for many of its precision tool parts

Nominal Analysis (AISI A2)

Carbon	1.00
Chromium	5.25
Manganese	.60
Molybdenum	1.00
Vanadium	.25

Size	Temperature	Cool	Rockwell C
All Sizes	1700º-1775º F	Still Air	63.5-65

Specifications

Furnished in 18" and 36" lengths, ground straight and parallel.

Hardening

497 and 499 Air Hardening Ground Flat Stock have a wide hardening range of 1700ºF to 1775ºF, with 1750ºF recommended for most work. For heavier sections use the high side of the range. Heat uniformly throughout but do not soak longer than necessary. Cool in still air. No pre-heat is required if pack or atmosphere controlled furnace methods are used, but with the open furnace method a pre-heat of 1450ºF is recommended.

Tempering

A tempering time of two hours at temperature is recommended. Use chart for selecting the desired Rockwell C hardness and corresponding tempering temperature. For maximum toughness, double temper for two hours at each temperature recommended. The following may also be used as a guide, depending on the type of work.

Light Blanking Punches and Dies

- 400º-425º F

Heavy Blanking Punches and Dies

- 700º F

Annealing

1525º-1575º F. Furnace cool at no more than 50º per hour to 800º for maximum softness.

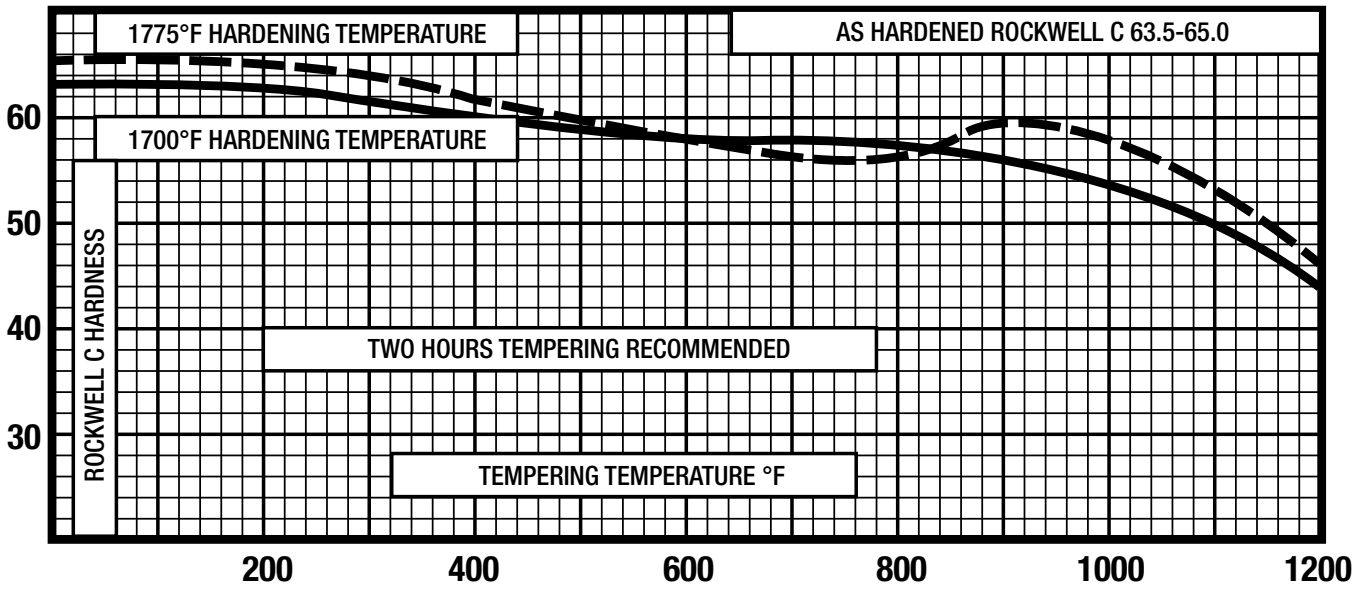

499, 1-1/4" and over is Blanchard ground with saw cut edges

Precision Ground Flat Stock

497 Air Hardening Precision Ground Flat Stock

STANDARD TOLERANCE

497 Air Hardening Precision Ground Flat Stock			
Thickness	Width	18" Length	36" Length
1/16"	1/2"	57489	57301
	3/4"	57490	57302
	1"	57491	57303
	1-1/4"	57492	57304
	1-1/2"	57493	57305
	2"	57494	57306
	2-1/2"	57495	57307
	3"	57496	57308
	4"	57497	57309
3/32"	1/2"	57498	57310
	3/4"	57499	57311
	1"	57500	57312
	1-1/4"	57501	57313
	1-1/2"	57502	57314
	2"	57503	57315
	2-1/2"	57504	57316
	3"	57505	57317
	4"	57506	57318
1/8"	1/2"	57243	57245
	5/8"	57507	57319
	3/4"	57244	57246
	1"	54589	54546
	1-1/4"	54590	54547
	1-1/2"	54591	54548
	1-3/4"	57508	57320
	2"	54592	54549
	2-1/2"	54593	54550
	3"	54594	54551
	3-1/2"	54595	54552
	4"	54596	54553
	5"	54598	54555
	6"	54599	54556
	7"	57509	57321
	8"	57510	57322
	10"	57511	57323
	12"	57512	57324
5/32"	1/2"	57513	57325
	3/4"	57514	57326
	1"	54600	54557
	1-1/4"	54601	54558
	1-1/2"	54602	54559
	1-3/4"	57515	57327
	2"	54603	54560
	2-1/2"	54604	54561
	3"	54605	54562
	3-1/2"	54606	54563
	4"	54607	54564
	5"	54608	54565
	6"	54609	54566
	8"	57516	57328

497 Air Hardening Precision Ground Flat Stock			
Thickness	Width	18" Length	36" Length
3/16"	3/16"	57517	57329
	1/2"	57518	57330
	3/4"	57519	57331
	1"	54610	54567
	1-1/4"	54611	54568
	1-1/2"	54612	54569
	1-3/4"	57520	57332
	2"	54613	54570
	2-1/2"	54614	54571
	3"	54615	54572
	3-1/2"	54616	54573
	4"	54617	54574
	5"	54618	54575
	6"	54619	54576
	7"	57521	57333
	8"	57522	57334
	12"	59129	59161
1/4"	1/4"	57523	57335
	1/2"	57524	57336
	3/4"	57525	57337
	1"	54620	54577
	1-1/4"	54621	54578
	1-1/2"	54622	54579
	1-3/4"	57526	57338
	2"	54623	54580
	2-1/2"	54624	54581
	3"	54625	54582
	3-1/2"	54626	54583
	4"	54627	54584
	5"	54629	54586
	6"	54631	54588
	8"	59130	59162
	12"	59131	59163
5/16"	5/16"	57527	57339
	1/2"	57528	57340
	3/4"	57529	57341
	1"	54717	54632
	1-1/4"	54718	54633
	1-1/2"	54719	54634
	1-3/4"	57530	57342
	2"	54720	54635
	2-1/2"	54721	54636
	3"	54722	54637
	3-1/2"	54723	54638
	4"	54724	54639
	5"	54726	54641
	6"	54727	54642
	8"	59132	59164

497 Air Hardening Precision Ground Flat Stock			
Thickness	Width	18" Length	36" Length
3/8"	3/8"	57531	57343
	1/2"	57532	57344
	3/4"	57533	57345
	1"	54728	54643
	1-1/4"	54729	54644
	1-1/2"	54730	54645
	1-3/4"	57534	57346
	2"	54731	54646
	2-1/2"	54732	54647
	3"	54733	54648
	3-1/2"	54734	54649
	4"	54735	54650
	5"	54737	54652
	6"	54739	54654
	8"	59133	59165
	12"	59134	59166
1/2"	1/2"	56495	56505
	5/8"	57535	57347
	3/4"	56494	56506
	1"	56493	56507
	1-1/4"	57536	57348
	1-1/2"	57537	57349
	1-3/4"	57538	57350
	2"	54748	54663
	2-1/2"	54749	54664
	3"	54750	54665
	3-1/2"	54751	54666
	4"	54752	54667
	5"	54754	54669
	6"	54755	54670
	8"	54757	54672
	12"	59135	59167
5/8"	5/8"	56499	56508
	3/4"	56498	56509
	1"	56497	56510
	1-1/2"	56496	56511
	2"	54760	54675
	2-1/2"	54761	54676
	3"	54762	54677
	3-1/2"	54763	54678
	4"	54764	54679
	5"	54765	54680
	6"	54766	54681
	8"	59136	59168
3/4"	3/4"	54770	54685
	1"	56501	56512
	1-1/4"	57539	57351
	1-1/2"	56500	56513
	2"	54771	54686
	2-1/2"	54772	54687
	3"	54773	54688
	4"	54775	54690
	5"	54777	54692
	6"	54778	54693

497 Air Hardening Precision Ground Flat Stock			
Thickness	Width	18" Length	36" Length
7/8"	7/8"	54781	54696
	1"	56503	56514
	1-1/2"	56502	56515
	2"	54782	54697
	2-1/2"		54698
	3"	54784	54699
	4"	54785	54700
	6"	54786	54701
1"	1"	54787	54702
	1-1/4"	57540	57352
	1-1/2"	56504	56516
	2"	54788	54703
	2-1/2"	54789	54704
	3"	54790	54705
	4"	54792	54707
	5"	54794	54709
	6"	54795	54710
1-1/4"	1-1/4"	54834	57684
	1-1/2"	57683	57686
	2"	54835	57687
	2-1/2"	54836	57688
	3"	54837	57689
	4"	54838	57690
	5"	54839	57691
	6"	54840	57692
1-1/2"	1-1/2"	54843	57693
	2"	54844	57694
	2-1/2"	54845	57695
	3"	54846	57696
	3-1/2"	54847	57697
	4"	54848	57698
	6"	54850	57699
2"	2"	54853	57700
	2-1/2"	54854	57701
	3"	54855	57702
	4"	54857	57703

Sizes other than listed priced on application

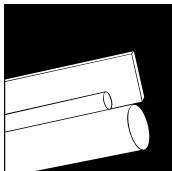

Precision Ground Flat Stock

499 Air Hardening Ground Flat Stock

OVERSIZE TOLERANCE

499 Air Hardening Ground Flat Stock			
Thickness	Width	18" Length	36" Length
1/8"	1/2"	57541	57353
	5/8"	57542	57354
	3/4"	57543	57355
	1"	57544	57356
	1-1/4"	57545	57357
	1-1/2"	57546	57358
	1-3/4"	57547	57359
	2"	57548	57360
	2-1/2"	57549	57361
	3"	57550	57362
	3-1/2"	57551	57363
	4"	57552	57364
	5"	57553	57365
	6"	57554	57366
	7"	57555	57367
	8"	57556	57368
	10"	57557	57369
	12"	57558	57370
5/32"	1/2"	57559	57371
	3/4"	57560	57372
	1"	57561	57373
	1-1/4"	57562	57374
	1-1/2"	57563	57375
	2"	57564	57376
	2-1/2"	57565	57377
	3"	57566	57378
	4"	57567	57379
	5"	57568	57380
	6"	57569	57381
	8"	57570	57382
3/16"	3/16"	57571	57383
	1/2"	57572	57384
	3/4"	57573	57385
	1"	57162	56896
	1-1/4"	57163	56897
	1-1/2"	57164	56898
	1-3/4"	57574	57386
	2"	57165	56899
	2-1/2"	57166	56900
	3"	57167	56901
	3-1/2"	57575	57387
	4"	57168	56902
	5"	57576	57388
	6"	57577	57389
	8"	57578	57390
	10"	57579	57391

499 Air Hardening Ground Flat Stock			
Thickness	Width	18" Length	36" Length
1/4"	1/4"	57580	57392
	3/8"		58906
	1/2"	57581	57393
	3/4"	57582	57394
	1"	57169	56903
	1-1/4"	57170	56904
	1-1/2"	57171	56905
	1-3/4"	57583	57395
	2"	57172	56906
	2-1/2"	57173	56907
	3"	57174	56908
	3-1/2"	57584	57396
	4"	57175	56909
	5"	57176	56910
	6"	57177	56911
	7"	57585	57397
	8"	57586	57398
	10"	57587	57399
	12"	57588	57400
5/16"	5/16"	57589	57401
	1/2"	57590	57402
	3/4"	57591	57403
	1"	57178	56912
	1-1/4"	57179	56913
	1-1/2"	57180	56914
	1-3/4"	57592	57404
	2"	57181	56915
	2-1/2"	57593	57405
	3"	57182	56916
	3-1/2"	57594	57406
	4"	57183	56917
	5"	57184	56918
	6"	57595	57407
	8"	57596	57408
3/8"	3/8"	57597	57409
	1/2"	57598	57410
	3/4"	57599	57411
	1"	57185	56919
	1-1/4"	57186	56920
	1-1/2"	57187	56921
	1-3/4"	57600	57412
	2"	57188	56922
	2-1/2"	57189	56923
	3"	57190	56924
	3-1/2"	57191	56925
	4"	57192	56926
	4-1/2"	57601	57413
	5"	57193	56927
	6"	57194	56928
	7"	57602	57414
	8"	57603	57415
	10"	57604	57416
	12"	57605	57417

499 Air Hardening Ground Flat Stock			
Thickness	Width	18" Length	36" Length
1/2"	1/2"	57195	56929
	5/8"	57606	57418
	3/4"	57196	56930
	1"	57197	56931
	1-1/4"	57607	57419
	1-1/2"	57608	57420
	1-3/4"	57609	57421
	2"	57198	56932
	2-1/2"	57199	56933
	3"	57200	56934
	3-1/2"	57201	56935
	4"	57202	56936
	4-1/2"	57610	57422
	5"	57203	56937
	6"	57204	56938
	7"	57611	57423
	8"	57612	57424
	10"	57613	57425
	12"	57614	57426
9/16"	2"	57615	57427
	2-1/2"	57616	57428
	3"	57617	57429
	4"	57618	57430
5/8"	5/8"	57205	56939
	3/4"	57206	56940
	1"	57207	56941
	1-1/4"	57619	57431
	1-1/2"	57208	56942
	2"	57209	56943
	2-1/2"	57210	56944
	3"	57211	56945
	3-1/2"	57212	56946
	4"	57620	57432
	5"	57621	57433
	6"	57622	57434
	8"	57623	57435
	10"	57624	57436
3/4"	3/4"	57213	56947
	1"	57214	56948
	1-1/4"	57625	57437
	1-1/2"	57215	56949
	1-3/4"	57626	57438
	2"	57216	56950
	2-1/2"	57627	57439
	3"	57217	56951
	3-1/2"	57628	57440
	4"	57218	56952
	4-1/2"	57629	57441
	5"	57630	57442
	6"	57631	57443
	8"	57632	57444
	10"	57633	57445
	12"	57634	57446

499 Air Hardening Ground Flat Stock			
Thickness	Width	18" Length	36" Length
7/8"	7/8"	57635	57447
	1"	57636	57448
	1-1/4"	57637	57449
	1-1/2"	57638	57450
	2"	57639	57451
	2-1/2"	57640	57452
	3"	57641	57453
	3-1/2"	57642	57454
	4"	57643	57455
	5"	57644	57456
	6"	57645	57457
1"	1"	57219	56953
	1-1/4"	57646	57458
	1-1/2"	57220	56954
	1-3/4"	57647	57459
	2"	57221	56955
	2-1/2"	57648	57460
	3"	57222	56956
	3-1/2"	57649	57461
	4"	57650	57462
	4-1/2"	57651	57463
	5"	57652	57464
	6"	57653	57465
	8"	57654	57466
	12"	57655	57467
1-1/4"	1-1/4"	57656	57468
	1-1/2"	57657	57469
	2"	57658	57470
	2-1/2"	57659	57471
	3"	57660	57472
	4"	57661	57473
	5"	57662	57474
	6"	57663	57475
1-1/2"	1-1/2"	57664	57476
	2"	57665	57477
	2-1/2"	57666	57478
	3"	57667	57479
	3-1/2"	57668	57480
	4"	57669	57481
	6"	57670	57482
	8"	59137	59169
	12"	59138	59170
2"	2"	57671	57483
	2-1/2"	57672	57484
	3"	57673	57485
	4"	57674	57486
2-1/2"	2-1/2"	57675	57487
3"	3"	57676	57488

499, 1-1/4" and over is Blanchard ground with saw cut edges
Sizes other than listed priced on application

Starrett®

Precision Ground Flat Stock

Heat Treatment and Tempering Data available upon request

344 A6 Air Hardening Precision Ground Flat Stock

A6 is a medium alloyed air hardening tool steel that provides an excellent balance of machinability, toughness and wear resistance. Its lower heat treating temperature, which is similar to that of oil hardening steel, results in deep hardness and minimum distortion.

Specifications

Furnished in 36" lengths, ground straight and parallel.

Nominal Analysis (AISI A6)

Carbon	.70
Chromium	1.00
Manganese	2.00
Molybdenum	1.25
Vanadium	–
Tungsten	–

344 Air Hardening Precision Ground Flat Stock

344 Air Hardening Precision Ground Flat Stock		
Thickness	Width	36" Length
1/16"	1/4"	58907
	5/16"	58908
	3/8"	58909
	1/2"	58910
	5/8"	58911
	3/4"	58912
	7/8"	58913
	1"	58914
	1-1/4"	58915
	1-1/2"	58916
	1-3/4"	58917
	2"	58918
	2-1/2"	58919
	3"	58920
	3-1/2"	58921
	4"	58922
	5"	58923
	6"	58924
3/32"	1/4"	58925
	5/16"	58926
	3/8"	58927
	1/2"	58928
	5/8"	58929
	3/4"	58930
	7/8"	58931
	1"	58932
	1-1/4"	58933
	1-1/2"	58934
	1-3/4"	58935
	2"	58936
	2-1/2"	58937
	3"	58938
	3-1/2"	58939
	4"	58940
	5"	58941
	6"	58942

344 Air Hardening Precision Ground Flat Stock		
Thickness	Width	36" Length
1/8"	1/4"	58943
	5/16"	58944
	3/8"	58945
	1/2"	58946
	5/8"	58947
	3/4"	58948
	7/8"	58949
	1"	58950
	1-1/4"	58951
	1-1/2"	58952
	1-3/4"	58953
	2"	58954
	2-1/2"	58955
	3"	58956
	3-1/2"	58957
	4"	58958
	5"	58959
	6"	58960
	7"	58961
	8"	58962
	10"	58963
	12"	58964
3/16"	3/16"	58965
	1/4"	58966
	5/16"	58967
	3/8"	58968
	1/2"	58969
	5/8"	58970
	3/4"	58971
	7/8"	58972
	1"	58973
	1-1/4"	58974
	1-1/2"	58975
	1-3/4"	58976
	2"	58977
	2-1/2"	58978
	3"	58979
	3-1/2"	58980
	4"	58981
	5"	58982
	6"	58983
	7"	58984
	8"	58985
	10"	58986
	12"	58987

344 Air Hardening Precision Ground Flat Stock		
Thickness	Width	36" Length
1/4"	1/4"	58988
	5/16"	58989
	3/8"	58990
	1/2"	58991
	5/8"	58992
	3/4"	58993
	7/8"	58994
	1"	58995
	1-1/4"	58996
	1-1/2"	58997
	1-3/4"	58998
	2"	58999
	2-1/2"	59000
	3"	59001
	3-1/2"	59002
	4"	59003
	5"	59004
	6"	59005
	7"	59006
	8"	59007
	10"	59008
	12"	59009
5/16"	5/16"	59010
	3/8"	59011
	1/2"	59012
	5/8"	59013
	3/4"	59014
	7/8"	59015
	1"	59016
	1-1/4"	59017
	1-1/2"	59018
	1-3/4"	59019
	2"	59020
	2-1/2"	59021
	3"	59022
	3-1/2"	59023
	4"	59024
	4-1/2"	59025
	5"	59026
	5-1/2"	59027
	6"	59028
	8"	59029
	10"	59030
	12"	59031

Sizes other than listed priced on application

Precision Ground Flat Stock

344 Air Hardening Precision Ground Flat Stock

CONTINUED

344 Air Hardening Precision Ground Flat Stock		
Thickness	Width	36" Length
3/8"	3/8"	59032
	1/2"	59033
	5/8"	59034
	3/4"	59035
	7/8"	59036
	1"	59037
	1-1/4"	59038
	1-1/2"	59039
	1-3/4"	59040
	2"	59041
	2-1/2"	59042
	3"	59043
	3-1/2"	59044
	4"	59045
	4-1/2"	59046
	5"	59047
	6"	59048
	7"	59049
	8"	59050
	10"	59051
	12"	59052
1/2"	1/2"	59053
	5/8"	59054
	3/4"	59055
	7/8"	59056
	1"	59057
	1-1/4"	59058
	1-1/2"	59059
	1-3/4"	59060
	2"	59061
	2-1/2"	59062
	3"	59063
	3-1/2"	59064
	4"	59065
	4-1/2"	59066
	5"	59067
	5-1/2"	59068
	6"	59069
	7"	59070
	8"	59071
	10"	59072
	12"	59073
5/8"	5/8"	59074
	3/4"	59075
	7/8"	59076
	1"	59077
	1-1/4"	59078
	1-1/2"	59079
	1-3/4"	59080
	2"	59081
	2-1/2"	59082
	3"	59083
	3-1/2"	59084
	4"	59085
	4-1/2"	59086
	5"	59087
	5-1/2"	59088
	6"	59089
	7"	59090
	8"	59091
	10"	59092

344 Air Hardening Precision Ground Flat Stock		
Thickness	Width	36" Length
3/4"	3/4"	59093
	7/8"	59094
	1"	59095
	1-1/4"	59096
	1-1/2"	59097
	1-3/4"	59098
	2"	59099
	2-1/2"	59100
	3"	59101
	3-1/2"	59102
	4"	59103
	4-1/2"	59104
	5"	59105
	5-1/2"	59106
	6"	59107
	7"	59108
	8"	59109
	10"	59110
1"	1"	59111
	1-1/4"	59112
	1-1/2"	59113
	1-3/4"	59114
	2"	59115
	2-1/2"	59116
	3"	59117
	3-1/2"	59118
	4"	59119
	4-1/2"	59120
	5"	59121
	5-1/2"	59122
	6"	59123
	7"	59124
	8"	59125
	10"	59126

Sizes other than listed priced on application

Precision Ground Flat Stock

401 and 402 High Carbon, High Chromium Precision Ground Flat Stock

- High carbon, high chromium steel
- For applications that demand the highest wear resistance
- 401 is standard tolerance
- 402 is oversize tolerance

Specifications

Furnished in 18" and 36" lengths, ground straight and parallel.

401 High Carbon, High Chromium Precision Ground Flat Stock

STANDARD TOLERANCE

401 High Carbon, High Chromium Precision Ground Flat Stock			
Thickness	Width	18" Length	36" Length
1/16"	1/2"	69097	69232
	3/4"	69098	69233
	1"	69099	69234
	1-1/4"	69100	69235
	1-1/2"	69101	69236
	2"	69102	69237
	2-1/2"	69103	69238
	3"	69104	69239
	4"	69105	69240
	5"	69106	69241
	6"	69107	69242
3/32"	1/2"	69108	69243
	3/4"	69109	69244
	1"	69110	69245
	1-1/4"	69111	69246
	1-1/2"	69112	69247
	2"	69113	69248
	2-1/2"	69114	69249
	3"	69115	69250
	4"	69116	69251
	5"	69117	69252
	6"	69118	69253
1/8"	1/2"	69119	69254
	3/4"	69120	69255
	1"	69121	69256
	1-1/4"	69122	69257
	1-1/2"	69123	69258
	2"	69124	69259
	2-1/2"	69125	69260
	3"	69126	69261
	4"	69127	69262
	5"	69128	69263
	6"	69129	69264
5/32"	1/2"	69130	69265
	3/4"	69131	69266
	1"	69132	69267
	1-1/4"	69133	69268
	1-1/2"	69134	69269
	2"	69135	69270
	2-1/2"	69136	69271
	3"	69137	69272
	4"	69138	69273
	5"	69139	69274
	6"	69140	69275

401 High Carbon, High Chromium Precision Ground Flat Stock			
Thickness	Width	18" Length	36" Length
3/16"	1/2"	69141	69276
	3/4"	69142	69277
	1"	69143	69278
	1-1/4"	69144	69279
	1-1/2"	69145	69280
	2"	69146	69281
	2-1/2"	69147	69282
	3"	69148	69283
	4"	69149	69284
	5"	69150	69285
	6"	69151	69286
1/4"	1/2"	69152	69287
	3/4"	69153	69288
	1"	69154	69289
	1-1/4"	69155	69290
	1-1/2"	69156	69291
	2"	69157	69292
	2-1/2"	69158	69293
	3"	69159	69294
	4"	69160	69295
	5"	69161	69296
	6"	69162	69297
5/16"	1/2"	69163	69298
	3/4"	69164	69299
	1"	69165	69300
	1-1/4"	69166	69301
	1-1/2"	69167	69302
	2"	69168	69303
	2-1/2"	69169	69304
	3"	69170	69305
	4"	69171	69306
	5"	69172	69307
	6"	69173	69308
3/8"	1/2"	69174	69309
	3/4"	69175	69310
	1"	69176	69311
	1-1/4"	69177	69312
	1-1/2"	69178	69313
	2"	69179	69314
	2-1/2"	69180	69315
	3"	69181	69316
	4"	69182	69317
	5"	69183	69318
	6"	69184	69319

401 High Carbon, High Chromium Precision Ground Flat Stock			
Thickness	Width	18" Length	36" Length
1/2"	3/4"	69185	69320
	1"	69186	69321
	1-1/4"	69187	69322
	1-1/2"	69188	69323
	2"	69189	69324
	2-1/2"	69190	69325
	3"	69191	69326
	4"	69192	69327
	5"	69193	69328
	6"	69194	69329
5/8"	5/8"	69195	69330
	3/4"	69196	69331
	1"	69197	69332
	1-1/4"	69198	69333
	1-1/2"	69199	69334
	2"	69200	69335
	2-1/2"	69201	69336
	3"	69202	69337
	4"	69203	69338
	5"	69204	69339
	6"	69205	69340
3/4"	3/4"	69206	69341
	1"	69207	69342
	1-1/4"	69208	69343
	1-1/2"	69209	69344
	2"	69210	69345
	2-1/2"	69211	69346
	3"	69212	69347
	4"	69213	69348
	5"	69214	69349
	6"	69215	69350
7/8"	7/8"	69216	69351
	1"	69217	69352
	2"	69218	69353
	3"	69219	69354
	4"	69220	69355
	5"	69221	69356
	6"	69222	69357
1"	1"	69223	69358
	1-1/4"	69224	69359
	1-1/2"	69225	69360
	2"	69226	69361
	2-1/2"	69227	69362
	3"	69228	69363
	4"	69229	69364
	5"	69230	69365
	6"	69231	69366

Sizes other than listed priced on application

Precision Ground Flat Stock

402 High Carbon, High Chromium Ground Flat Stock

OVERSIZE TOLERANCE

402 High Carbon, High Chromium Ground Flat Stock			
Thickness	Width	18" Length	36" Length
1/8"	1/2"	69367	69481
	3/4"	69368	69482
	1"	69369	69483
	1-1/4"	69370	69484
	1-1/2"	69371	69485
	2"	69372	69486
	2-1/2"	69373	69487
	3"	69374	69488
	4"	69375	69489
	5"	69376	69490
	6"	69377	69491
5/32"	1/2"	69378	69492
	3/4"	69379	69493
	1"	69380	69494
	1-1/4"	69381	69495
	1-1/2"	69382	69496
	2"	69383	69497
	2-1/2"	69384	69498
	3"	69385	69499
	4"	69386	69500
	5"	69387	69501
	6"	69388	69502
3/16"	1/2"	69389	69503
	3/4"	69390	69504
	1"	69391	69505
	1-1/4"	69392	69506
	1-1/2"	69393	69507
	2"	69394	69508
	2-1/2"	69395	69509
	3"	69396	69510
	4"	69397	69511
	5"	69398	69512
	6"	69399	69513
1/4"	1/2"	69400	69514
	3/4"	69401	69515
	1"	69402	69516
	1-1/4"	69403	69517
	1-1/2"	69404	69518
	2"	69405	69519
	2-1/2"	69406	69520
	3"	69407	69521
	4"	69408	69522
	5"	69409	69523
	6"	69410	69524
5/16"	1/2"	69411	69525
	3/4"	69412	69526
	1"	69413	69527
	1-1/4"	69414	69528
	1-1/2"	69415	69529
	2"	69416	69530
	2-1/2"	69417	69531
	3"	69418	69532
	4"	69419	69533
	5"	69420	69534
	6"	69421	69535

402 High Carbon, High Chromium Ground Flat Stock			
Thickness	Width	18" Length	36" Length
3/8"	1/2"	69422	69536
	3/4"	69423	69537
	1"	69424	69538
	1-1/4"	69425	69539
	1-1/2"	69426	69540
	2"	69427	69541
	2-1/2"	69428	69542
	3"	69429	69543
	4"	69430	69544
	5"	69431	69545
	6"	69432	69546
1/2"	1/2"	69433	69547
	3/4"	69434	69548
	1"	69435	69549
	1-1/4"	69436	69550
	1-1/2"	69437	69551
	2"	69438	69552
	2-1/2"	69439	69553
	3"	69440	69554
	4"	69441	69555
	5"	69442	69556
	6"	69443	69557
5/8"	5/8"	69444	69558
	3/4"	69445	69559
	1"	69446	69560
	1-1/4"	69447	69561
	1-1/2"	69448	69562
	2"	69449	69563
	2-1/2"	69450	69564
	3"	69451	69565
	4"	69452	69566
	5"	69453	69567
	6"	69454	69568
3/4"	3/4"	69455	69569
	1"	69456	69570
	1-1/4"	69457	69571
	1-1/2"	69458	69572
	2"	69459	69573
	2-1/2"	69460	69574
	3"	69461	69575
	4"	69462	69576
	5"	69463	69577
	6"	69464	69578
7/8"	7/8"	69465	69579
	1"	69466	69580
	1-1/2"	69467	69581
	2"	69468	69582
	3"	69469	69583
	4"	69470	69584
	6"	69471	69585
1"	1"	69472	69586
	1-1/4"	69473	69587
	1-1/2"	69474	69588
	2"	69475	69589
	2-1/2"	69476	69590
	3"	69477	69591
	4"	69478	69592
	5"	69479	69593
	6"	69480	69594

Sizes other than listed priced on application

Precision Ground Flat Stock

Specifications

Furnished in 24" lengths, ground straight and parallel.

Analysis

Starrett 498 Low Carbon Precision Ground Flat Stock is a .20 carbon fine-grained, milled steel, which can be carburized or case hardened. Very similar to AISI 1018.

Heat Treatment

For many applications, stock can be used unhardened. However, if surface hardening is desired, it can be carburized or case hardened. If carburized, a case of 1/32" will be obtained if the steel is held in carburizing salt at 1700º F for three hours.

498 Low Carbon Precision Ground Flat Stock

- Substantial cost reductions over tool steel ground flat stock. There are savings up to 60% because this is a low carbon steel and furnished in 24" lengths. This means that you get one-third more steel at less cost.
- Ideal for a wide variety of parts that don't require more expensive heat treated steels, such as stripper plates, jigs, fixtures, machine and component parts, templates, etc.
- This steel can be carburized or case hardened. After hardening, its physical properties, especially tensile strength, yield point, and Brinell hardness, are substantially higher.
- **NOTE**: Thicknesses of 1/8" and under are made from AISI 1010 material
- Starrett uses its own ground flat stock for many of its precision tool parts

498 Low Carbon Precision Ground Flat Stock

498 Low Carbon Precision Ground Flat Stock		
Thickness	Width	24" Length
1/16"	1/2"	54866
	3/4"	54867
	1"	54868
	1-1/4"	54869
	1-1/2"	54870
	2"	54871
	2-1/2"	54872
	3"	54873
	3-1/2"	54874
	4"	54875
	5"	54876
	6"	54877
	8"	54878
	10"	54879
	12"	54880
3/32"	1/2"	54881
	3/4"	54882
	1"	54883
	1-1/4"	54884
	1-1/2"	54885
	2"	54886
	2-1/2"	54887
	3"	54888
	3-1/2"	58285
	4"	54889
	5"	54890
	6"	54891
	8"	54892
	10"	58286
	12"	58287

498 Low Carbon Precision Ground Flat Stock		
Thickness	Width	24" Length
1/8"	1/2"	54893
	3/4"	54894
	1"	54895
	1-1/4"	54896
	1-1/2"	54897
	2"	54898
	2-1/2"	54899
	3"	54900
	3-1/2"	54901
	4"	54902
	5"	54903
	6"	54904
	8"	54905
	10"	54906
	12"	54907
5/32"	1/2"	54908
	3/4"	54909
	1"	54910
	1-1/4"	54911
	1-1/2"	54912
	2"	54913
	2-1/2"	54914
	3"	54915
	3-1/2"	58290
	4"	54917
	5"	54918
	6"	54919
	8"	58291
	10"	58292
	12"	58293

498 Low Carbon Precision Ground Flat Stock		
Thickness	Width	24" Length
3/16"	3/16"	57247
	1/2"	54921
	3/4"	54922
	1"	54923
	1-1/4"	54924
	1-1/2"	54925
	2"	54926
	2-1/2"	54927
	3"	54928
	3-1/2"	54929
	4"	54930
	5"	54931
	6"	54932
	8"	54933
	10"	54934
	12"	57248
1/4"	1/4"	57249
	1/2"	54935
	3/4"	54936
	1"	54937
	1-1/4"	54938
	1-1/2"	54939
	2"	54940
	2-1/2"	54941
	3"	54942
	3-1/2"	54943
	4"	54944
	5"	54945
	6"	54946
	8"	54947
	10"	54948
	12"	54949

Sizes other than listed priced on application

Precision Ground Flat Stock

498 Low Carbon Precision Ground Flat Stock

CONTINUED

498 Low Carbon Precision Ground Flat Stock		
Thickness	Width	24" Length
5/16"	5/16"	57250
	1/2"	54950
	3/4"	54951
	1"	54952
	1-1/4"	54953
	1-1/2"	54954
	2"	54955
	2-1/2"	54956
	3"	54957
	3-1/2"	54958
	4"	54959
	5"	54960
	6"	54961
	8"	54962
	10"	57251
	12"	57252
3/8"	3/8"	54964
	1/2"	54965
	3/4"	54966
	1"	54967
	1-1/4"	54968
	1-1/2"	54969
	2"	54970
	2-1/2"	54971
	3"	54972
	3-1/2"	54973
	4"	54974
	5"	54975
	6"	54976
	7"	54977
	8"	54978
	9"	54979
	10"	54980
	12"	54981
7/16"	7/16"	54982
1/2"	1/2"	54983
	3/4"	54984
	1"	54985
	1-1/4"	54986
	1-1/2"	54987
	2"	54988
	2-1/2"	54989
	3"	54990
	3-1/2"	54991
	4"	54992
	5"	54993
	6"	54994
	7"	54995
	8"	54996
	9"	54997
	10"	54998
	12"	54999
9/16"	9/16"	55000

498 Low Carbon Precision Ground Flat Stock		
Thickness	Width	24" Length
5/8"	5/8"	55001
	3/4"	55002
	1"	55003
	1-1/4"	55004
	1-1/2"	55005
	2"	55006
	2-1/2"	55007
	3"	55008
	3-1/2"	55009
	4"	55010
	5"	55011
	6"	55012
	7"	55013
	8"	55014
	9"	55015
	10"	55016
	12"	57253
3/4"	3/4"	55017
	1"	55018
	1-1/4"	55019
	1-1/2"	55020
	2"	55021
	2-1/2"	55022
	3"	55023
	3-1/2"	55024
	4"	55025
	5"	55026
	6"	55027
	7"	57254
	8"	55028
	9"	55029
	10"	55030
	12"	55031
7/8"	7/8"	55032
	1"	55033
	1-1/4"	55034
	1-1/2"	55035
	2"	55036
	2-1/2"	55037
	3"	55038
	3-1/2"	57255
	4"	55039
	6"	55040
1"	1"	55041
	1-1/4"	55042
	1-1/2"	55043
	2"	55044
	2-1/2"	55045
	3"	55046
	3-1/2"	55047
	4"	55048
	5"	55049
	6"	55050
	7"	57256
	8"	55051
	9"	55052
	10"	55053
	12"	55054
1-1/8"	1-1/8"	58288

498 Low Carbon Precision Ground Flat Stock		
Thickness	Width	24" Length
1-1/4"	1-1/4"	55055
	1-1/2"	55056
	2"	55057
	2-1/2"	55058
	3"	55059
	4"	55060
	5"	55061
	6"	55062
	8"	55063
	10"	55065
	12"	57257
1-1/2"	1-1/2"	55066
	2"	55067
	2-1/2"	55068
	3"	55069
	3-1/2"	55070
	4"	55071
	5"	55072
	6"	55073
	8"	55074
	10"	55075
2"	2"	55076
2-1/2"	2-1/2"	58289

Sizes other than listed priced on application

Precision Drill Rod

O1 480 Precision Ground and Polished Drill Rod

AISI/SAE O1 is a general purpose tool steel with good wear resistance, toughness and machinability.

Nominal Analysis (AISI O1)

Carbon	.90
Chromium	.50
Manganese	1.20
Tungsten	.50
Vanadium	.20

Heat Treatment and Tempering Data available upon request

Tolerances

Size Range	Diameter	Length
.124" round and less	± .0003"	+ 1/8"- 0
.125" to .499"	± .0005"	+ 1/8"- 0
.500" to 2"	± .0010"	+ 1/8"- 0

O1 480 Precision Ground and Polished Drill Rod

Letter Sizes

Diameter	Decimal	36" Length
A	0.2340	68201
B	0.2380	68202
C	0.2420	68203
D	0.2460	68204
E	0.2500	68205
F	0.2570	68206
G	0.2610	68207
H	0.2660	68208
I	0.2720	68209
J	0.2770	68210
K	0.2810	68211
L	0.2900	68212
M	0.2950	68213
N	0.3020	68214
O	0.3160	68215
P	0.3230	68216
Q	0.3320	68217
R	0.3390	68218
S	0.3480	68219
T	0.3580	68220
U	0.3680	68221
V	0.3770	68222
W	0.3860	68223
X	0.3970	68224
Y	0.4040	68225
Z	0.4130	68226

Number Sizes

Diameter	Decimal	36" Length
52	0.0630	68251
51	0.0660	68252
50	0.0690	68253
49	0.0720	68254
48	0.0750	68255
47	0.0770	68256
46	0.0790	68257
45	0.0810	68258
44	0.0850	68259
43	0.0880	68260
42	0.0920	68261
41	0.0950	68262
40	0.0970	68263
39	0.0990	68264
38	0.1010	68265
37	0.1030	68266
36	0.1060	68267
35	0.1080	68268
34	0.1100	68269
33	0.1120	68270
32	0.1150	68271
31	0.1200	68272
30	0.1270	68273
29	0.1340	68274
28	0.1390	68275
27	0.1430	68276

Number Sizes

Diameter	Decimal	36" Length
26	0.1460	68277
25	0.1480	68278
24	0.1510	68279
23	0.1530	68280
22	0.1550	68281
21	0.1570	68282
20	0.1610	68283
19	0.1640	68284
18	0.1680	68285
17	0.1720	68286
16	0.1750	68287
15	0.1780	68288
14	0.1800	68289
13	0.1820	68290
12	0.1850	68291
11	0.1880	68292
10	0.1910	68293
9	0.1940	68294
8	0.1970	68295
7	0.1990	68296
6	0.2010	68297
5	0.2040	68298
4	0.2070	68299
3	0.2120	68300
2	0.2190	68301
1	0.2270	68302

Sizes other than listed priced on application

Precision Drill Rod

01 480 Precision Ground and Polished Drill Rod

CONTINUED

Fractional Sizes		
Diameter		
in	Decimal	36" Length
1/16	0.0625	68303
5/64	0.0781	68304
3/32	0.0938	68305
7/64	0.1094	68306
1/8	0.1250	68307
9/64	0.1406	68308
5/32	0.1563	68309
11/64	0.1719	68310
3/16	0.1875	68311
13/64	0.2031	68312
7/32	0.2188	68313
15/64	0.2344	68314
1/4	0.2500	68315
17/64	0.2656	68316
9/32	0.2813	68317
19/64	0.2969	68318
5/16	0.3125	68319
21/64	0.3281	68320
11/32	0.3438	68321
23/64	0.3594	68322
3/8	0.3750	68323
25/64	0.3906	68324
13/32	0.4063	68325
27/64	0.4219	68326
7/16	0.4375	68327
29/64	0.4531	68328
15/32	0.4688	68329
31/64	0.4844	68330
1/2	0.5000	68331
33/64	0.5156	68332
17/32	0.5313	68333
35/64	0.5469	68334
9/16	0.5625	68335
37/64	0.5781	68336
19/32	0.5938	68337
39/64	0.6094	68338
5/8	0.6250	68339
41/64	0.6406	68340
21/32	0.6563	68341
43/64	0.6719	68342
11/16	0.6875	68343
45/64	0.7031	68344
23/32	0.7188	68345
47/64	0.7344	68346
3/4	0.7500	68347
49/64	0.7656	68348
25/32	0.7813	68349
51/64	0.7969	68350
13/16	0.8125	68351
53/64	0.8281	68352

Fractional Sizes		
Diameter		
in	Decimal	36" Length
27/32	0.8438	68353
55/64	0.8594	68354
7/8	0.8750	68355
57/64	0.8906	68356
29/32	0.9063	68357
59/64	0.9219	68358
15/16	0.9375	68359
61/64	0.9531	68360
31/32	0.9688	68361
63/64	0.9844	68362
1	1.0000	68363
1-1/64	1.0156	68364
1-1/32	1.0313	68365
1-3/64	1.0469	68366
1-1/16	1.0625	68367
1-5/64	1.0781	68368
1-3/32	1.0938	68369
1-7/64	1.1094	68370
1-1/8	1.1250	68371
1-9/64	1.1406	68372
1-5/32	1.1563	68373
1-11/64	1.1719	68374
1-3/16	1.1875	68375
1-13/64	1.2031	68376
1-7/32	1.2188	68377
1-15/64	1.2344	68378
1-1/4	1.2500	68379
1-17/64	1.2656	68380
1-9/32	1.2813	68381
1-19/64	1.2969	68382
1-5/16	1.3125	68383
1-21/64	1.3281	68384
1-11/32	1.3438	68385
1-23/64	1.3594	68386
1-3/8	1.3750	68387
1-25/64	1.3906	68388
1-13/32	1.4063	68389
1-27/64	1.4219	68390
1-7/16	1.4375	68391
1-29/64	1.4531	68392
1-15/32	1.4688	68393
1-31/64	1.4844	68394
1-1/2	1.5000	68395
1-9/16	1.5625	68396
1-5/8	1.6250	68397
1-11/16	1.6875	68398
1-3/4	1.7500	68399
1-13/16	1.8125	68400
1-7/8	1.8750	68401
1-15/16	1.9375	68402
2	2.0000	68403

Metric Sizes		
Diameter		
mm	Decimal	36" Length
2	0.0787	68227
3	0.1181	68228
4	0.1575	68229
5	0.1969	68230
6	0.2362	68231
7	0.2756	68232
8	0.3150	68233
9	0.3543	68234
10	0.3937	68235
11	0.4331	68236
12	0.4724	68237
13	0.5118	68238
14	0.5512	68239
15	0.5906	68240
16	0.6299	68241
17	0.6693	68242
18	0.7087	68243
19	0.7480	68244
20	0.7874	68245
21	0.8268	68246
22	0.8661	68247
23	0.9055	68248
24	0.9449	68249
25	0.9843	68250

Sizes other than listed priced on application

Heat Treatment and Tempering Data available upon request

Precision Drill Rod

W1 481 Precision Ground and Polished Drill Rod

AISI/SAE W1 is a versatile and less expensive tool steel that has superior machinability and maintains good wear resistance and toughness characteristics.

Nominal Analysis (AISI W1)

Carbon 90-1.05
Manganese ..... .30-.50

Tolerances		
Size Range	Diameter	Length
.124" round and less	± .0003"	+ 1/8"- 0
.125" to .499"	± .0005"	+ 1/8"- 0
.500" to 2"	± .0010"	+ 1/8"- 0

W1 481 Precision Ground and Polished Drill Rod

Letter Sizes		
Diameter	Decimal	36" Length
A	0.2340	68404
B	0.2380	68405
C	0.2420	68406
D	0.2460	68407
E	0.2500	68408
F	0.2570	68409
G	0.2610	68410
H	0.2660	68411
I	0.2720	68412
J	0.2770	68413
K	0.2810	68414
L	0.2900	68415
M	0.2950	68416
N	0.3020	68417
O	0.3160	68418
P	0.3230	68419
Q	0.3320	68420
R	0.3390	68421
S	0.3480	68422
T	0.3580	68423
U	0.3680	68424
V	0.3770	68425
W	0.3860	68426
X	0.3970	68427
Y	0.4040	68428
Z	0.4130	68429

Number Sizes		
Diameter	Decimal	36" Length
52	0.0630	68430
51	0.0660	68431
50	0.0690	68432
49	0.0720	68433
48	0.0750	68434
47	0.0770	68435
46	0.0790	68436
45	0.0810	68437
44	0.0850	68438
43	0.0880	68439
42	0.0920	68440
41	0.0950	68441
40	0.0970	68442
39	0.0990	68443
38	0.1010	68444
37	0.1030	68445
36	0.1060	68446
35	0.1080	68447
34	0.1100	68448
33	0.1120	68449
32	0.1150	68450
31	0.1200	68451
30	0.1270	68452
29	0.1340	68453
28	0.1390	68454
27	0.1430	68455

Number Sizes		
Diameter	Decimal	36" Length
26	0.1460	68456
25	0.1480	68457
24	0.1510	68458
23	0.1530	68459
22	0.1550	68460
21	0.1570	68461
20	0.1610	68462
19	0.1640	68463
18	0.1680	68464
17	0.1720	68465
16	0.1750	68466
15	0.1780	68467
14	0.1800	68468
13	0.1820	68469
12	0.1850	68470
11	0.1880	68471
10	0.1910	68472
9	0.1940	68473
8	0.1970	68474
7	0.1990	68475
6	0.2010	68476
5	0.2040	68477
4	0.2070	68478
3	0.2120	68479
2	0.2190	68480
1	0.2270	68481

Sizes other than listed priced on application

Precision Drill Rod

W1 481 Precision Ground and Polished Drill Rod

CONTINUED

Fractional Sizes		
Diameter		
in	Decimal	36" Length
1/16	0.0625	68482
5/64	0.0781	68483
3/32	0.0938	68484
7/64	0.1094	68485
1/8	0.1250	68486
9/64	0.1406	68487
5/32	0.1563	68488
11/64	0.1719	68489
3/16	0.1875	68490
13/64	0.2031	68491
7/32	0.2188	68492
15/64	0.2344	68493
1/4	0.2500	68494
17/64	0.2656	68495
9/32	0.2813	68496
19/64	0.2969	68497
5/16	0.3125	68498
21/64	0.3281	68499
11/32	0.3438	68500
23/64	0.3594	68501
3/8	0.3750	68502
25/64	0.3906	68503
13/32	0.4063	68504
27/64	0.4219	68505
7/16	0.4375	68506
29/64	0.4531	68507
15/32	0.4688	68508
31/64	0.4844	68509
1/2	0.5000	68510
33/64	0.5156	68511
17/32	0.5313	68512
35/64	0.5469	68513
9/16	0.5625	68514
37/64	0.5781	68515
19/32	0.5938	68516
39/64	0.6094	68517
5/8	0.6250	68518
41/64	0.6406	68519
21/32	0.6563	68520
43/64	0.6719	68521
11/16	0.6875	68522
45/64	0.7031	68523
23/32	0.7188	68524
47/64	0.7344	68525
3/4	0.7500	68526
49/64	0.7656	68527
25/32	0.7813	68528
51/64	0.7969	68529
13/16	0.8125	68530
53/64	0.8281	68531

Fractional Sizes		
Diameter		
in	Decimal	36" Length
27/32	0.8438	68532
55/64	0.8594	68533
7/8	0.8750	68534
57/64	0.8906	68535
29/32	0.9063	68536
59/64	0.9219	68537
15/16	0.9375	68538
61/64	0.9531	68539
31/32	0.9688	68540
63/64	0.9844	68541
1	1.0000	68542
1-1/64	1.0156	68543
1-1/32	1.0313	68544
1-3/64	1.0469	68545
1-1/16	1.0625	68546
1-5/64	1.0781	68547
1-3/32	1.0938	68548
1-7/64	1.1094	68549
1-1/8	1.1250	68550
1-9/64	1.1406	68551
1-5/32	1.1563	68552
1-11/64	1.1719	68553
1-3/16	1.1875	68554
1-13/64	1.2031	68555
1-15/64	1.2344	68557
1-1/4	1.2500	68558
1-17/64	1.2656	68559
1-9/32	1.2813	68560
1-19/64	1.2969	68561
1-5/16	1.3125	68562
1-21/64	1.3281	68563
1-11/32	1.3438	68564
1-23/64	1.3594	68565
1-3/8	1.3750	68566
1-25/64	1.3906	68567
1-13/32	1.4063	68568
1-27/64	1.4219	68569
1-7/16	1.4375	68570
1-29/64	1.4531	68571
1-15/32	1.4688	68572
1-31/64	1.4844	68573
1-1/2	1.5000	68574
1-9/16	1.5625	68575
1-5/8	1.6250	68576
1-11/16	1.6875	68577
1-3/4	1.7500	68578
1-13/16	1.8125	68579
1-7/8	1.8750	68580
1-15/16	1.9375	68581
2	2.0000	68582

Sizes other than listed priced on application

Precision Drill Rod

A2 482 Precision Ground and Polished Drill Rod

AISI/SAE A2 is a more highly alloyed tool steel that provides excellent wear resistance and toughness and good machinability.

Nominal Analysis (AISI A2)

Carbon	1.00
Chromium	5.25
Manganese	.60
Molybdenum	1.00
Silicon	.40
Vanadium	.25

Heat Treatment and Tempering Data available upon request

Tolerances		
Size Range	Diameter	Length
.124" round and less	± .0003"	+ 1/8"- 0
.125" to .499"	± .0005"	+ 1/8"- 0
.500" to 2"	± .0010"	+ 1/8"- 0

A2 482 Precision Ground and Polished Drill Rod

Fractional Sizes		
Diameter		
in	Decimal	36" Length
1/16	0.0625	68662
5/64	0.0781	68663
3/32	0.0938	68664
7/64	0.1094	68665
1/8	0.1250	68583
9/64	0.1406	68666
5/32	0.1563	68631
11/64	0.1719	68667
3/16	0.1875	68584
13/64	0.2031	68668
7/32	0.2188	68632
15/64	0.2344	68669
1/4	0.2500	68585
17/64	0.2656	68670
9/32	0.2813	68633
19/64	0.2969	68671
5/16	0.3125	68586
21/64	0.3281	68672
11/32	0.3438	68634
23/64	0.3594	68673
3/8	0.3750	68587
25/64	0.3906	68674
13/32	0.4063	68675
27/64	0.4219	68676

Fractional Sizes		
Diameter		
in	Decimal	36" Length
7/16	0.4375	68588
29/64	0.4531	68677
15/32	0.4688	68678
31/64	0.4844	68679
1/2	0.5000	68589
17/32	0.5313	68680
9/16	0.5625	68590
19/32	0.5938	68681
5/8	0.6250	68591
21/32	0.6563	68682
11/16	0.6875	68592
23/32	0.7188	68683
3/4	0.7500	68593
13/16	0.8125	68594
7/8	0.8750	68595
15/16	0.9375	68684
1	1.0000	68596
11/16	1.0625	68685
1-1/8	1.1250	68597
1-1/4	1.2500	68598
13/8	1.3750	68686
1-1/2	1.5000	68599
13/4	1.7500	68687
2	2.0000	68688

Sizes other than listed priced on application

PRECISION MAKES THE DIFFERENCE

PURE PRECISION.

The combined powerful features of our metrology inspection and measurement systems will provide your test facility with a multi-functional measurement and inspection system that will serve you for years to come.

Starrett®

(978) 249-3551 • starrett.com

Follow us!

To order printed literature or view an electronic version of the publications in this section, please visit starrett.com/catalogs

VOCATIONAL AND EDUCATIONAL

Free Literature
AVAILABLE AT STARRETT.COM

Getting Starrett Literature Just Got Easier

HOW TO ORDER

Ordering literature has never been easier. Visit our literature site at **starrett.com/catalogs** where our simple catalog ordering interface allows you to create an account, select printed material you would like to order and have it shipped directly to you at no cost.

Literature ranges from posters that can be hung in the workshop to booklets that help explain how to utilize your Starrett tools. Pocket cards and memo pads are also available for those who need precise measurements while on the job, or in the classroom.

ALSO AVAILABLE
User Manuals · Datasheets · Whitepapers · Material Safety Data Sheets (MSDS) · Starrett-3D Parts Catalog · Digital Design Assistant · Videos

How to Create a Literature Account

1. Log onto **starrett.com**
2. Select "Catalogs"
3. Select "Create Account"
4. Fill in your mailing information and create a password
5. Select your User Group - New User, Educator, Distributor, or Sales
6. Select "Submit Registration" to create your account

Starrett Catalogs

Cat. No.	Description
Cat. 33	Precision Tool Catalog
Cat. 60	Band Saw Blade Catalog
Cat. 71	PTA and Hand Tool Catalog
Cat. 81	Metrology Equipment Catalog

Complete list of literature, visit starrett.com/catalogs

Starrett Literature at Your Fingertips

Our digital catalogs contain all of the information you have come to expect from our printed literature, but without taking up space on your desk.

Features

- Access to all Starrett catalogs, brochures, datasheets and educational materials
- Easy sharing through email
- Print a page
- Quickly download the whole catalog for convenient offline viewing

Free Literature
AVAILABLE AT STARRETT.COM

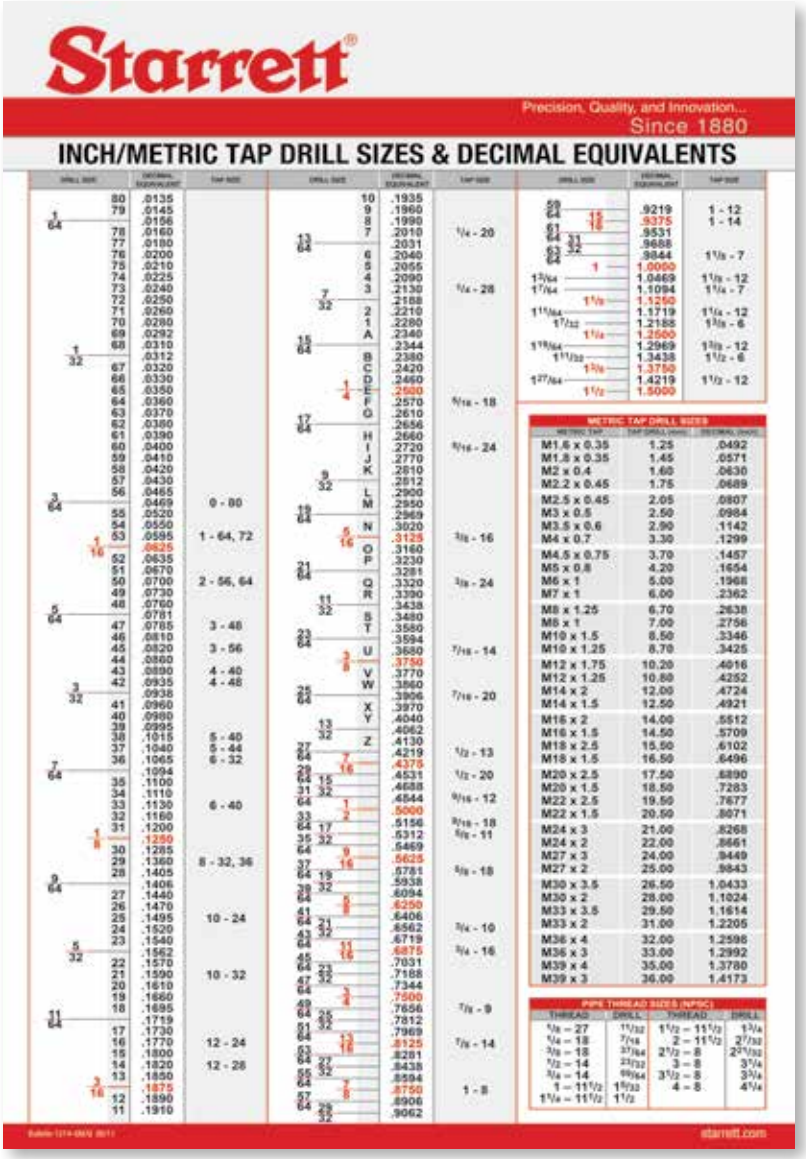

Inch/Metric Tap Drill Sizes and Decimal Equivalents Wall Chart

Suited for factory-machine areas and tool cribs, as well as classroom use. Charts are packed one per tube.

Decimal equivalents of 8ths, 16ths, 32nds and 64ths of an inch; decimal equivalents of letter size drills (A-Z) and number size drills (1-80); drill sizes for standard taps from #0-80 to 1-1/2–12 (approximately 65% thread); and pipe taps from 1/8-27 to 4-8. Metric tap/drill sizes section. Size 25 x 41-1/2" (635 x 1054mm).

Cat. No.	Dimensions in	Dimensions mm	Description
1214	25 x 41-1/2	635 x 1054	Inch/Metric tap drill sizes and decimal equivalents wall chart

Complete list of literature, visit starrett.com/catalogs

Memo Notepads

Convenient 40-paged notepad featuring the 795.1 Electronic Micrometer on the front cover. Measures 3 x 5".

Cat. No.	Dimensions	Description
1314	3 x 5"	Memo notepad

Complete list of literature, visit starrett.com/catalogs

Precision Tool Poster

Attractive wall poster displaying a sample of our most popular tools. Posters are packed 1 per tube. Measures 26 x 39".

Cat. No.	Dimensions	Description
1213	26 x 39"	Precision tool poster

Complete list of literature, visit starrett.com/catalogs

Free Literature

AVAILABLE AT STARRETT.COM

Tools and Rules for Precision Measuring

This valuable and popular training aid includes coverage of newer tools as well as the familiar reference material to traditional topics. This booklet tells the story of precision measurements in down-to-earth language that has been popular over the years.

Information includes: linear measuring standards; measuring and transferring measurements; steel rules; calipers and dividers; how to read vernier tools and the micrometer; types of micrometers; gage blocks and digital measuring tools; dial indicators; layout with accuracy; measuring lathe work; measuring screw threads; facts about fit; limits of tolerance; electronic tools; and also includes a helpful reference section – decimal equivalents, squares, cubes, square and cube roots, tap drill and screw thread information.

Cat. No.	Description
1211	Tools and Rules

Complete list of literature, visit starrett.com/catalogs

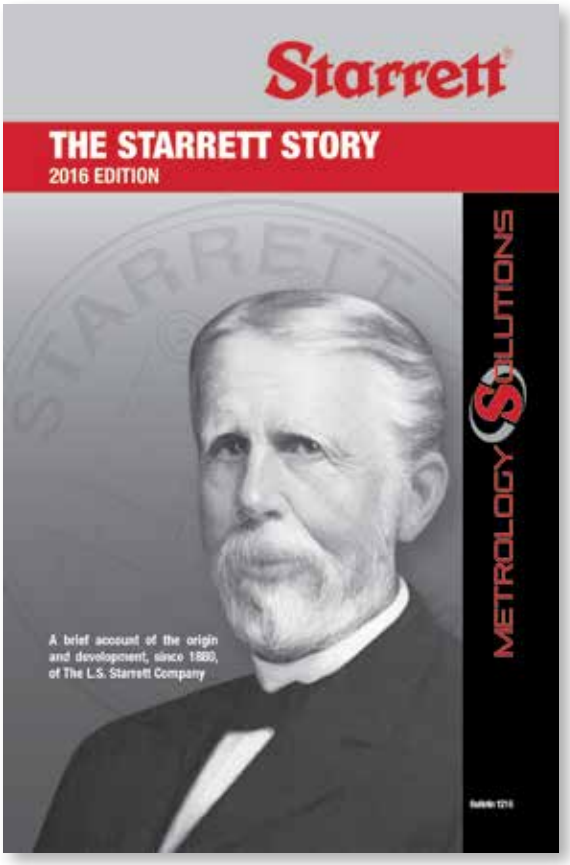

The Starrett Story

A brief history of The L.S. Starrett Company, which was founded over 133 years ago by an early mechanical genius, Laroy S. Starrett. It reviews the founder's boyhood years, business problems and successes, tools introduced, personal philosophy and community service. A fascinating story of ambition, perseverance, accomplishment and contribution to industry and his fellow man.

Cat. No.	Description
1216	The Starrett Story

Complete list of literature, visit starrett.com/catalogs

Free Literature

AVAILABLE AT STARRETT.COM

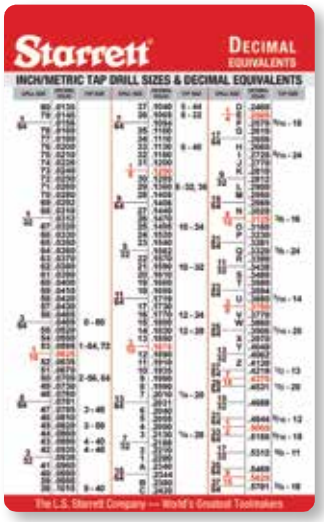

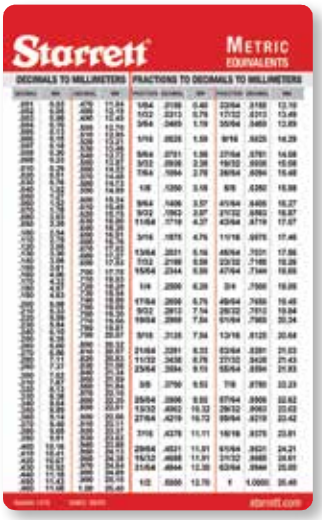

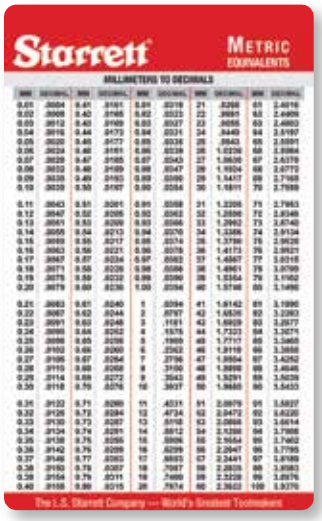

Decimal Equivalents Card

Card shows decimal equivalents of 8ths, 16ths, 32nds and 64ths of an inch; decimal equivalents of letter size drills (A-Z) and number size drills (1-80); drill sizes for standard taps from #0-80 to 1-1/2-12 (approximately 65% thread); and pipe taps from 1/8-27 to 4-8. Metric tap/drill sizes section. Printed on two sides in red and black. Pocket size 3" x 5" (75 x 125mm).

Cat. No.	Dimensions in	mm	Description
1317	3 x 5	75 x 125	Decimal equivalent card

Complete list of literature, visit starrett.com/catalogs

Metric Equivalents Card

Card shows millimeters to decimals equivalents from 0.01 mm to 100mm (.0004"-3.9370"); decimals-to-millimeters from .001" to 1.00" (0.03-25.40mm); and fractions-to- decimals-to-millimeters from 1/64" to 1" (0.40-25.40mm). Printed on two sides in red and black. Pocket size 3" x 5" (75 x 125mm).

Cat. No.	Dimensions in	mm	Description
1318	3 x 5	75 x 125	Metric equivalent card

Complete list of literature, visit starrett.com/catalogs

Priced Literature

The Starrett Book for Student Machinists

This familiar handbook for machine shop beginners is written in clear, simple language, contains 160 pages including 200 diagrams, illustrations, reference tables, and is fully indexed. Printed on coated paper with soil-resistant binding for durable machine shop use.

Chapter Headings: Mechanical Drawings; Fits and Terminology; Bench Work; How to Make Measurements; Cutting Speed and Cutting Fluids; Drilling and Related Operations; Lathe Operations; Grinding; Metal Sawing; Toolmaking; Geometry; Mechanics.

1700	53218	The Starrett Book for Student Machinists

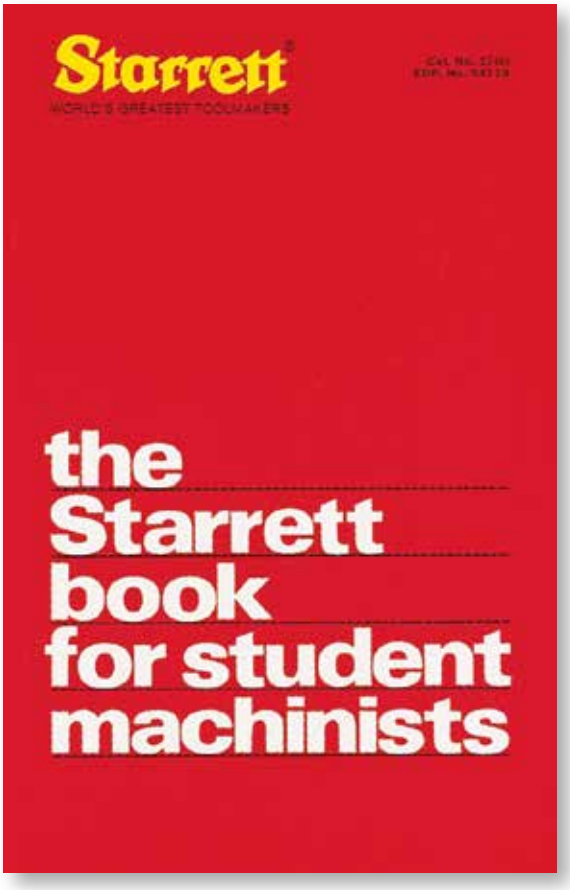

Set of 17 Educational Charts

WALL SIZE | THREE-RING NOTEBOOK SIZE

Seventeen white print charts help learners recognize basic tools, their principal parts and uses. Tools illustrated: outside and inside micrometers; micrometer depth gage; vernier caliper and height gage; electronic micrometer and caliper; hook rule; combination square and bevel protractor; dial indicator and dial test indicators; dial caliper; magnetic base indicator holders; surface gage.
The set includes sheets on "How to Read Metric Measuring Tools" and "How to Read English Measuring Tools."

Wall size charts are 18-5/8 x 14-5/8" (473 x 371mm). Notebook size is 3-hole punched and 11 x 8-1/2" (280 x 216mm).

Cat. No.	EDP	Description
1702	56172	Wall Size Educational Charts
1715	53220	Three-Ring Notebook Size Educational Charts

How to Order Priced Literature

To order priced literature please contact Customer Service at (978) 249-3551 extension 400.

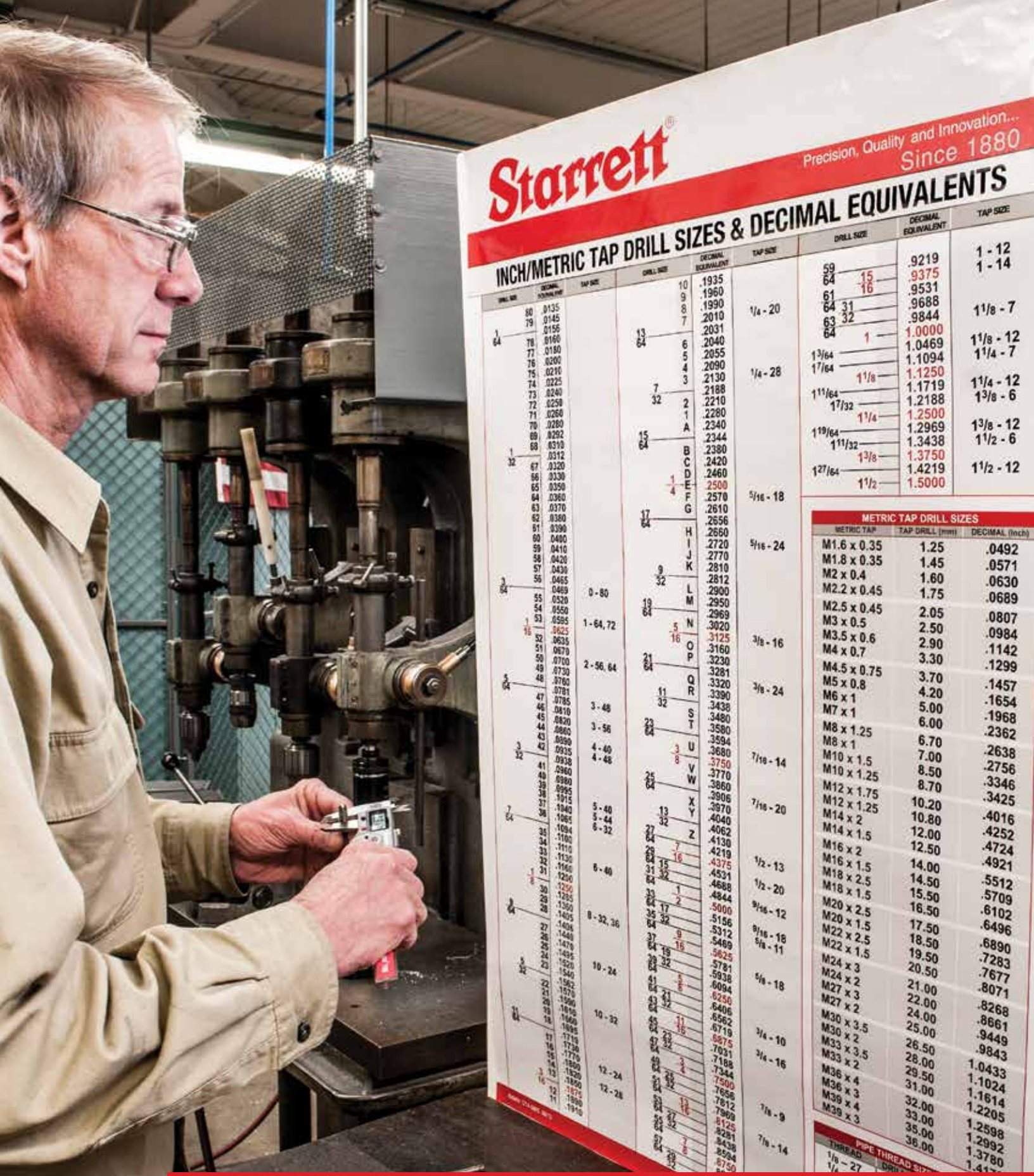

REFERENCE TABLES

Metric and English Equivalents

Linear Measure	
Metric to Inch	**Inch to Metric**
1 millimeter = 0.03937 inch	1 inch = 25.4 millimeters = 2.54 centimeters
1 centimeter = 0.3937 inch	1 foot = 304.8 millimeters = 0.3048 meter
1 meter = 39.37 inches = 3.2808 feet = 1.0936 yards	1 yard = 0.9144 meter
1 kilometer = 0.6214 mile	1 mile = 1.609 kilometers
Square Measure	
Metric to Inch	**Inch to Metric**
1 square millimeter = 0.00155 square inch	1 square inch = 6.452 square centimeters = 645.2 square millimeters
1 square centimeter = 0.155 square inch	1 square foot = 0.0929 square meter = 929 square centimeters
1 square meter = 10.764 square feet = 1.196 square yards	1 square yard = 0.836 square meter
1 are = 0.0247 acre = 1076.4 square feet	1 acre = 0.4047 hectare = 40.47 ares
1 hectare = 2.471 acres = 107,639 square feet	1 square mile = 2.5900 square kilometers
1 square kilometer = 0.3861 square mile = 247.1 acres	
Cubic Measure	
Metric to English	**English to Metric**
1 liter = 0.2642 U.S. gallon = 1.0567 U.S. quarts	1 U.S. quart = 0.946 liter
1 liter (cubic decimeter) = 0.0353 cubic foot = 61.024 cubic inches	1 U.S. gallon = 3.785 liters = 231 cubic inches
1 cubic centimeter = 0.061 cubic inch	1 cubic inch = 16.38706 cubic centimeters
1 cubic meter = 264.2 U.S. gallons	1 cubic foot = 0.02832 cubic meter = 28.317 liters
1 cubic meter = 35.315 cubic feet = 1.308 cubic yards	1 cubic yard = 0.7646 cubic meter
Weight	
Metric to English	**English to Metric**
1 gram = 15.432 grains	1 grain = 0.0648 gram
1 gram = 0.03527 ounce avoirdupois (Commercial)	1 ounce avoirdupois (Commercial) = 28.35 grams
1 kilogram = 2.2046 pounds = 35.274 ounces avoirdupois (Commercial)	1 pound = 0.4536 kilogram = 453.6 grams
1 metric ton = 0.9842 ton (of 2240 pounds) = 2204.6 pounds	1 short ton (2,000 pounds) = .907 metric ton = 907 kilograms

Inch to Millimeter Conversions

Decimal	mm
0.001	0.0254
0.002	0.0508
0.003	0.0762
0.004	0.1016
0.005	0.1270
0.006	0.1524
0.007	0.1778
0.008	0.2032
0.009	0.2286
0.010	0.2540
0.020	0.5080
0.030	0.7620
0.040	1.0160
0.050	1.2700
0.060	1.5240
0.070	1.7780
0.080	2.0320
0.090	2.2860
0.100	2.5400
0.110	2.7940
0.120	3.0480
0.130	3.3020
0.140	3.5560
0.150	3.8100
0.160	4.0640
0.170	4.3180
0.180	4.5720
0.190	4.8260
0.200	5.0800
0.210	5.3340
0.220	5.5880
0.230	5.8420
0.240	6.0690
0.250	6.3500
0.260	6.6040
0.270	6.8580
0.280	7.1120
0.290	7.3660
0.300	7.6200
0.310	7.8740
0.320	8.1280
0.330	8.3820
0.340	8.6360
0.350	8.8900
0.360	9.1440
0.370	9.3980
0.380	9.6520
0.390	9.9060
0.400	10.1600
0.410	10.4140
0.420	10.6680
0.430	10.9220
0.440	11.1760
0.450	11.4300
0.460	11.6840
0.470	11.9380
0.480	12.1920
0.490	12.4460

Decimal	mm
0.500	12.7000
0.510	12.9540
0.520	13.2080
0.530	13.4620
0.540	13.7160
0.550	13.9700
0.560	14.2240
0.570	14.4780
0.580	14.7320
0.590	14.9860
0.600	15.2400
0.610	15.4940
0.620	15.7480
0.630	16.0020
0.640	16.2560
0.650	16.5100
0.660	16.7640
0.670	17.0180
0.680	17.2720
0.690	17.5260
0.700	17.7800
0.710	18.0340
0.720	18.2880
0.730	18.5420
0.740	18.7960
0.750	19.0500
0.760	19.3040
0.770	19.5580
0.780	19.8120
0.790	20.0660
0.800	20.3200
0.810	20.5740
0.820	20.8280
0.830	21.0820
0.840	21.3360
0.850	21.5900
0.860	21.8440
0.870	22.0980
0.880	22.3520
0.890	22.6060
0.900	22.8600
0.910	23.1140
0.920	23.3680
0.930	23.6220
0.940	23.8760
0.950	24.1300
0.960	24.3840
0.970	24.6380
0.980	24.8920
0.990	25.1460
1.000	25.4000

Fraction	Decimal	mm
1/64	0.0156	0.3969
1/32	0.0313	0.7938
3/64	0.0469	1.1906
1/16	0.0625	1.5875
5/64	0.0781	1.9844
3/32	0.0938	2.3812
7/64	0.1094	2.7781
1/8	0.1250	3.1750
9/64	0.1406	3.5719
5/32	0.1563	3.9688
11/64	0.1719	4.3656
3/16	0.1875	4.7625
13/64	0.2031	5.1594
7/32	0.2188	5.5562
15/64	0.2344	5.9531
1/4	0.2500	6.3500
17/64	0.2656	6.7469
9/32	0.2813	7.1438
19/64	0.2969	7.5406
5/16	0.3125	7.9375
21/64	0.3281	8.3344
11/32	0.3438	8.7312
23/64	0.3594	9.1281
3/8	0.3750	9.5250
25/64	0.3906	9.9219
13/32	0.4063	10.3188
27/64	0.4219	10.7156
7/16	0.4375	11.1125
29/64	0.4531	11.5094
15/32	0.4688	11.9062
31/64	0.4844	12.3031
1/2	0.5000	12.700
33/64	0.5156	13.0969
17/32	0.5313	13.4938
35/64	0.5469	13.8906
9/16	0.5625	14.2875
37/64	0.5781	14.6844
19/32	0.5938	15.0812
39/64	0.6094	15.4781
5/8	0.6250	15.8750
41/64	0.6406	16.2719
21/32	0.6563	16.6688
43/64	0.6719	17.0656
11/16	0.6875	17.4625
45/64	0.7031	17.8594
23/32	0.7188	18.2562
47/64	0.7344	18.6531
3/4	0.7500	19.0500
49/64	0.7656	19.4469
25/32	0.7813	19.8438
51/64	0.7969	20.2406
13/16	0.8125	20.6375
53/64	0.8281	21.0344
27/32	0.8438	21.4312
55/64	0.8594	21.8281
7/8	0.8750	22.2250
57/64	0.8906	22.6219
29/32	0.9063	23.0188
59/64	0.9219	23.4156
15/16	0.9375	23.8125
61/64	0.9531	24.2094
31/32	0.9688	24.6062
63/64	0.9844	25.0031
1	1.0000	25.4000

Millimeter to Inch Conversions

mm	Decimal
0.01	.00039
0.02	.00079
0.03	.00118
0.04	.00157
0.05	.00197
0.06	.00236
0.07	.00276
0.08	.00315
0.09	.00354
0.10	.00394
0.11	.00433
0.12	.00472
0.13	.00512
0.14	.00551
0.15	.00591
0.16	.00630
0.17	.00669
0.18	.00709
0.19	.00748
0.20	.00787
0.21	.00827
0.22	.00866
0.23	.00906
0.24	.00945
0.25	.00984
0.26	.01024
0.27	.01063
0.28	.01102
0.29	.01142
0.30	.01181
0.31	.01220
0.32	.01260
0.33	.01299
0.34	.01339
0.35	.01378
0.36	.01417
0.37	.01457
0.38	.01496
0.39	.01535
0.40	.01575
0.41	.01614
0.42	.01654
0.43	.01693
0.44	.01732
0.45	.01772
0.46	.01811
0.47	.01850
0.48	.01890
0.49	.01929
0.50	.01969
0.51	.02008
0.52	.02047
0.53	.02087
0.54	.02126
0.55	.02165
0.56	.02205
0.57	.02244
0.58	.02283
0.59	.02323
0.60	.02362
0.61	.02402
0.62	.02441
0.63	.02480

mm	Decimal
0.64	.02520
0.65	.02559
0.66	.02598
0.67	.02638
0.68	.02677
0.69	.02717
0.70	.02756
0.71	.02795
0.72	.02835
0.73	.02874
0.74	.02913
0.75	.02953
0.76	.02992
0.77	.03031
0.78	.03071
0.79	.03110
0.80	.03150
0.81	.03189
0.82	.03228
0.83	.03268
0.84	.03307
0.85	.03346
0.86	.03386
0.87	.03425
0.88	.03465
0.89	.03504
0.90	.03543
0.91	.03583
0.92	.03622
0.93	.03661
0.94	.03701
0.95	.03740
0.96	.03780
0.97	.03819
0.98	.03858
0.99	.03898
1.00	.03937
1	.03937
2	.07874

mm	Decimal
3	.11811
4	.15748
5	.19685
6	.23622
7	.27559
8	.31496
9	.35433
10	.39370
11	.43307
12	.47244
13	.51181
14	.55118
15	.59055
16	.62992
17	.66929
18	.70866
19	.74803
20	.78740
21	.82677
22	.86614
23	.90551
24	.94488
25	.98425
26	1.02362
27	1.06299
28	1.10236
29	1.14173
30	1.18110
31	1.22047
32	1.25984
33	1.29921
34	1.33858
35	1.37795
36	1.41732
37	1.45669
38	1.49606
39	1.53543
40	1.57480
41	1.61417
42	1.65354
43	1.69291
44	1.73228
45	1.77165
46	1.81102
47	1.85039
48	1.88976
49	1.92913
50	1.96850
51	2.00787
52	2.04724
53	2.08661
54	2.12598
55	2.16535
56	2.20472
57	2.24409
58	2.28346
59	2.32283
60	2.36220
61	2.40157
62	2.44094
63	2.48031
64	2.51969
65	2.55906

mm	Decimal
66	2.59843
67	2.63780
68	2.67717
69	2.71654
70	2.75591
71	2.79528
72	2.83465
73	2.87402
74	2.91339
75	2.95276
76	2.99213
77	3.03150
78	3.07087
79	3.11024
80	3.14961
81	3.18898
82	3.22835
83	3.26772
84	3.30709
85	3.34646
86	3.38583
87	3.42520
88	3.46457
89	3.50394
90	3.54331
91	3.58268
92	3.62205
93	3.66142
94	3.70079
95	3.74016
96	3.77953
97	3.81890
98	3.85827
99	3.89764
100	3.93701

Decimal Equivalents of 8ths, 16ths, 32nds and 64ths

8ths		
1/8	=	.125
1/4	=	.250
3/8	=	.375
1/2	=	.500
5/8	=	.625
3/4	=	.750
7/8	=	.875

16ths		
1/16	=	.0625
3/16	=	.1875
5/16	=	.3125
7/16	=	.4375
9/16	=	.5625
11/16	=	.6875
13/16	=	.8125
15/16	=	.9375

32nds		
1/32	=	.03125
3/32	=	.09375
5/32	=	.15625
7/32	=	.21875
9/32	=	.28125
11/32	=	.34375
13/32	=	.40625
15/32	=	.46875
17/32	=	.53125
19/32	=	.5975
21/32	=	.65625
23/32	=	.71875
25/32	=	.78125
27/32	=	.84375
29/32	=	.90625
31/32	=	.96875

64ths		
1/64	=	.015625
3/64	=	.046875
5/64	=	.078125
7/64	=	.109375
9/64	=	.140625
11/64	=	.171875
13/64	=	.203125
15/64	=	.234375
17/64	=	.265625
19/64	=	.296875
21/64	=	.328125
23/64	=	.359375
25/64	=	.390625
27/64	=	.421875
29/64	=	.453125
31/64	=	.484375
33/64	=	.515625
35/64	=	.546875

64ths		
37/64	=	.578125
39/64	=	.609375
41/64	=	.640625
43/64	=	.671875
45/64	=	.703125
47/64	=	.734375
49/64	=	.765625
51/64	=	.796875
53/64	=	.828125
55/64	=	.859375
57/64	=	.890625
59/64	=	.921875
61/64	=	.953125
63/64	=	.984375

Decimal Equivalents of Letter Size Drills

Letter	Size of Drill in Inches
A	.234
B	.238
C	.242
D	.246
E	.250
F	.257
G	.261
H	.266
I	.272
J	.277

Letter	Size of Drill in Inches
K	.281
L	.290
M	.295
N	.302
O	.316
P	.323
Q	.332
R	.339
S	.348

Letter	Size of Drill in Inches
T	.358
U	.368
V	.377
W	.386
X	.397
Y	.404
Z	.413

Decimal Equivalents of Number Size Drills

No.	Size of Drill in Inches
1	.2280
2	.2210
3	.2130
4	.2090
5	.2055
6	.2040
7	.2010
8	.1990
9	.1960
10	.1935
11	.1910
12	.1890
13	.1850
14	.1820

No.	Size of Drill in Inches
15	.1800
16	.1770
17	.1730
18	.1695
19	.1660
20	.1610
21	.1590
22	.1570
23	.1540
24	.1520
25	.1495
26	.1470
27	.1440
28	.1405

No.	Size of Drill in Inches
29	.1360
30	.1285
31	.1200
32	.1160
33	.1130
34	.1110
35	.1100
36	.1065
37	.1040
38	.1015
39	.0995
40	.0980
41	.0960
42	.0935

No.	Size of Drill in Inches
43	.0890
44	.0860
45	.0820
46	.0810
47	.0785
48	.0760
49	.0730
50	.0700
51	.0670
52	.0635
53	.0595
54	.0550
55	.0520
56	.0465

No.	Size of Drill in Inches
57	.0430
58	.0420
59	.0410
60	.0400
61	.0390
62	.0380
63	.0370
64	.0360
65	.0350
66	.0330
67	.0320
68	.0310

No.	Size of Drill in Inches
69	.0292
70	.0280
71	.0260
72	.0250
73	.0240
74	.0225
75	.0210
76	.0200
77	.0180
78	.0160
79	.0145
80	.0135

American Standard Pipe Thread and Tap Drill Sizes

Pipe Size (in)	Threads Per Inch	Root Diameter Small End of Pipe and Gage	Tap Drill Taper NPT	Straight NPS
1/8	27	.3339"	Q	11/32"
1/4	18	.4329"	7/16"	7/16"
3/8		.5676"	9/16"	37/64"
1/2	14	.7013"	45/64"	23/32"
3/4		.9105"	29/32"	59/64"
1	11-1/2	1.1441"	1-9/64"	1-5/32"
1-1/4		1.4876"	1-31/64"	1-1/2"
1-1/2		1.7265"	1-47/64"	1-3/4"
2		2.1995"	2-13/64"	2-7/32"

American National and Unified Coarse and Fine Thread Dimensions and Tap Drill Sizes

$$p = \text{pitch} = \frac{1}{\text{thread per inch}}$$

$$d = \text{depth} = p \times .649519$$

$$f = \text{flat} = \frac{p}{8}$$

$$\text{pitch diameter} = D - \frac{.6495}{N}$$

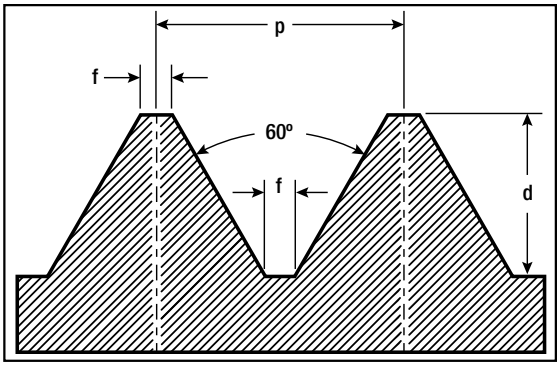

Size	Threads per inch UNC UNF	NC NF	Outside Diameter (in)	Pitch Diameter (in)	Root Diameter (in)	Tap Drill Approx. 75% Full Thread	Decimal Equiv. of Tap Drill
0	–	80	.0600	.0519	.0438	3/64"	.0469
1	64	–	.0730	.0629	.0527	53	.0595
1	–	72	.0730	.0640	.0550	53	.0595
2	56	–	.0860	.0744	.0628	50	.0700
2	–	64	.0860	.0759	.0657	50	.0700
3	48	–	.0990	.0855	.0719	47	.0785
3	–	56	.0990	.0874	.0758	46	.0810
4	40	–	.1120	.0958	.0795	43	.0890
4	–	48	.1120	.0985	.0849	42	.0935
5	40	–	.1250	.1088	.0925	38	.1015
5	–	44	.1250	.1102	.0955	37	.1040
6	32	–	.1380	.1177	.0974	36	.1065
6	–	40	.1380	.1218	.1055	33	.1130
8	32	–	.1640	.1437	.1234	29	.1360
8	–	36	.1640	.1460	.1279	29	.1360
10	24	–	.1900	.1629	.1359	26	.1470
10	–	32	.1900	.1697	.1494	21	.1590
12	24	–	.2160	.1889	.1619	16	.1770
12	–	28	.2160	.1928	.1696	15	.1800
1/4"	20	–	.2500	.2175	.1850	7	.2010
1/4"	–	28	.2500	.2268	.2036	3	.2130
5/16"	18	–	.3125	.2764	.2403	F	.2570
5/16"	–	24	.3125	.2854	.2584	I	.2720
3/8"	16	–	.3750	.3344	.2938	5/16"	.3125
3/8"	–	24	.3750	.3479	.3209	Q	.3320
7/16"	14	–	.4375	.3911	.3447	U	.3680
7/16"	–	20	.4375	.4050	.3726	25/64"	.3906
1/2"	13	–	.5000	.4500	.4001	27/64"	.4219
1/2"	–	20	.5000	.4675	.4351	29/64"	.4531
9/16"	12	–	.5625	.5084	.4542	31/64"	.4844
9/16"	–	18	.5625	.5264	.4903	33/64"	.5156
5/8"	11	–	.6250	.5660	.5069	17/32"	.5312
5/8"	–	18	.6250	.5889	.5528	37/64"	.5781
3/4"	10	–	.7500	.6850	.6201	21/32"	.6562
3/4"	–	16	.7500	.7094	.6688	11/16"	.6875
7/8"	9	–	.8750	.8028	.7307	49/64"	.7656
7/8"	–	14	.8750	.8286	.7822	13/16"	.8125
1"	8	–	1.0000	.9188	.8376	7/8"	.8750
1"	–	12	1.0000	.9459	.8917	59/64"	.9219
1-1/8"	7	–	1.1250	1.0322	.9394	63/64"	.9844
1-1/8"	–	12	1.1250	1.0709	1.0168	1-3/64"	1.0469
1-1/4"	7	–	1.2500	1.1572	1.0644	1-7/64"	1.1094
1-1/4"	–	12	1.2500	1.1959	1.1418	1-11/64"	1.1719
1-3/8"	6	–	1.3750	1.2667	1.1585	1-7/32"	1.2187
1-3/8"	–	12	1.3750	1.3209	1.2668	1-19/64"	1.2969
1-1/2"	6	–	1.5000	1.3917	1.2835	1-11/32"	1.3437
1-1/2"	–	12	1.5000	1.4459	1.3918	1-27/64"	1.4219
1-3/4"	5	–	1.7500	1.6201	1.4902	1-9/16"	1.5625
2"	4-1/2	–	2.0000	1.8557	1.7113	1-25/32"	1.7812
2-1/4"	4-1/2	–	2.2500	2.1057	1.9613	2-1/32"	2.0313
2-1/2"	4-1/2	–	2.5000	2.3376	2.1752	2-1/4"	2.2500
2-3/4"	4	–	2.7500	2.5876	2.4252	2-1/2"	2.5000
3"	4	–	3.0000	2.8376	2.6752	2-3/4"	2.7500
3-1/4"	4	–	3.2500	3.0876	2.9252	3"	3.0000
3-1/2"	4	–	3.5000	3.3376	3.1752	3-1/4"	3.2500
3-3/4"	4	–	3.7500	3.5876	3.4252	3-1/2"	3.5000
4"	4	–	4.0000	3.3786	3.6752	3-3/4"	3.7500

Millimeter Tap Drill Sizes

Metric Tap	Tap Drill (mm)	Decimal Equiv. (in)
M1.6 x 0.35	1.25	.0492
M1.8 x 0.35	1.45	.0571
M2 x 0.4	1.60	.0630
M2.2 x 0.45	1.75	.0689
M2.5 x 0.45	2.05	.0807
M3 x 0.5	2.50	.0984
M3.5 x 0.6	2.90	.1142
M4 x 0.7	3.30	.1299
M4.5 x 0.75	3.70	.1457
M5 x 0.8	4.20	.1654
M6 x 1	5.00	.1968
M7 x 1	6.00	.2362
M8 x 1.25	6.70	.2638
M8 x 1	7.00	.2756

Metric Tap	Tap Drill (mm)	Decimal Equiv. (in)
M10 x 1.5	8.50	.3346
M10 x 1.25	8.70	.3425
M12 x 1.75	10.20	.4016
M12 x 1.25	10.80	.4252
M14 x 2	12.00	.4724
M14 x 1.5	12.50	.4921
M16 x 2	14.00	.5512
M16 x 1.5	14.50	.5709
M18 x 2.5	15.50	.6102
M18 x 1.5	16.50	.6496
M20 x 2.5	17.50	.6890
M20 x 1.5	18.50	.7283
M22 x 2.5	19.50	.7677
M22 x 1.5	20.50	.8071

Metric Tap	Tap Drill (mm)	Decimal Equiv. (in)
M24 x 3	21.00	.8268
M24 x 2	22.00	.8661
M27 x 3	24.00	.9449
M27 x 2	25.00	.9843
M30 x 3.5	26.50	1.0433
M30 x 2	28.00	1.1024
M33 x 3.5	29.50	1.1614
M33 x 2	31.00	1.2205
M36 x 4	32.00	1.2598
M36 x 3	33.00	1.2992
M39 x 4	35.00	1.3780
M39 x 3	36.00	1.4173

Tap Drill Sizes for Fractional Size Threads

APPROXIMATELY 65% DEPTH THREAD/AMERICAN NATIONAL THREAD FORM

Tap Size	Threads per Inch	Hole Diameter	Drill
1/16	72	.049	3/64
1/16	64	.047	3/64
1/16	60	.046	56
5/64	72	.065	52
5/64	64	.063	1/16
5/64	60	.062	1/16
5/64	56	.061	53
3/32	60	.077	5/64
3/32	56	.076	48
3/32	50	.074	49
3/32	48	.073	49
7/64	56	.092	42
7/64	50	.090	43
7/64	48	.089	43
1/8	48	.105	36
1/8	40	.101	38
1/8	36	.098	40
1/8	32	.095	3/32
9/64	40	.116	32
9/64	36	.114	33
9/64	32	.110	35
5/32	40	.132	30
5/32	36	.129	30
5/32	32	.126	1/8
11/64	36	.145	27
11/64	32	.141	9/64
3/16	36	.161	20
3/16	32	.157	22
3/16	30	.155	23
3/16	24	.147	26
13/64	32	.173	17
13/64	30	.171	11/64
13/64	24	.163	20
7/32	32	.188	12
7/32	28	.184	13
7/32	24	.178	16
15/64	32	.204	6
15/64	28	.200	8
15/64	24	.194	10
1/4	32	.220	7/32

Tap Size	Threads per Inch	Hole Diameter	Drill
1/4	28	.215	3
1/4	27	.214	3
1/4	24	.209	4
1/4	20	.201	7
5/16	32	.282	9/32
5/16	27	.276	J
5/16	24	.272	I
5/16	20	.264	17/64
5/16	18	.258	F
3/8	27	.339	R
3/8	24	.334	Q
3/8	20	.326	21/64
3/8	16	.314	5/16
7/16	27	.401	Y
7/16	24	.397	X
7/16	20	.389	25/64
7/16	14	.368	U
1/2	27	.464	15/32
1/2	24	.460	29/64
1/2	20	.451	29/64
1/2	13	.425	27/64
1/2	12	.419	27/64
9/16	27	.526	17/32
9/16	18	.508	33/64
9/16	12	.481	31/64
5/8	27	.589	19/32
5/8	18	.571	37/64
5/8	12	.544	35/64
5/8	11	.536	17/32
11/16	16	.627	5/8
11/16	11	.599	19/32
3/4	27	.714	23/32
3/4	16	.689	11/16
3/4	12	.669	43/64
3/4	10	.653	21/32
13/16	12	.731	47/64
13/16	10	.715	23/32
7/8	27	.839	27/32
7/8	18	.821	53/64
7/8	14	.805	13/16

Tap Size	Threads per Inch	Hole Diameter	Drill
7/8	12	.794	51/64
7/8	9	.767	49/64
15/16	12	.856	55/64
15/16	9	.829	53/64
1	27	.964	31/32
1	14	.930	15/16
1	12	.919	59/64
1	8	.878	7/8
1-1/16	8	.941	15/16
1-1/8	12	1.044	1-3/64
1-1/8	7	.986	63/64
1-3/16	7	1.048	1-3/64
1-1/4	12	1.169	1-11/64
1-1/4	7	1.111	1-7/64
1-5/16	7	1.173	1-11/64
1-3/8	12	1.294	1-19/64
1-3/8	6	1.213	1-7/32
1-1/2	12	1.419	1-27/64
1-1/2	6	1.338	1-11/32
1-5/8	5-1/2	1.448	1-29/64
1-3/4	5	1.555	1-9/16
1-7/8	5	1.680	1-11/16
2	4-1/2	1.783	1-25/32
2-1/8	4-1/2	1.909	1-29/32
2-1/4	4-1/2	2.034	2-1/32
2-3/8	4	2.131	2-1/8
2-1/2	4	2.256	2-1/4
2-5/8	4	2.381	2-3/8
2-3/4	4	2.506	2-1/2
2-7/8	3-1/2	2.597	2-19/32
3	3-1/2	2.722	2-23/32
3-1/8	3-1/2	2.847	2-27/32
3-1/4	3-1/2	2.972	2-31/32
3-3/8	3-1/4	3.075	3-1/16
3-1/2	3-1/4	3.200	3-3/16
3-5/8	3-1/4	3.325	3-5/16
3-3/4	3	3.425	3-7/16
4	3	3.675	3-11/16

Double Depth of Screw Threads

ISO External Threads

MEDIUM FIT

$$D.D. = \frac{1.732}{N} \quad \text{For V Thread}$$

$$D.D. = \frac{1.299}{N} \quad \text{For American Nat. Form, U.S. Std}$$

$$D.D. = \frac{1.28}{N} \quad \text{For Whitworth Standard}$$

Threads per Inch	V Threads	Am. Nat. Form U.S. Standard	Whitworth Standard
N	D.D.	D.D.	D.D.
2	.86600	.64950	.64000
3	.57733	.43300	.42666
4	.43300	.32475	.32000
10	.17320	.12990	.12800
13	.13323	.09992	.09846
18	.09622	.07216	.07111
20	.08660	.06495	.06400
22	.07872	.05904	.05818
24	.07216	.05412	.05333
26	.06661	.04996	.04923
27	.06415	.04811	.04740
28	.06185	.04639	.04571
30	.05773	.04330	.04266
32	.05412	.04059	.04000
34	.05094	.03820	.03764
36	.04811	.03608	.03555
38	.04558	.03418	.03368
40	.04330	.03247	.03200
56	.03093	.02319	.02285
60	.02887	.02165	.02133
80	.02165	.01623	.01600

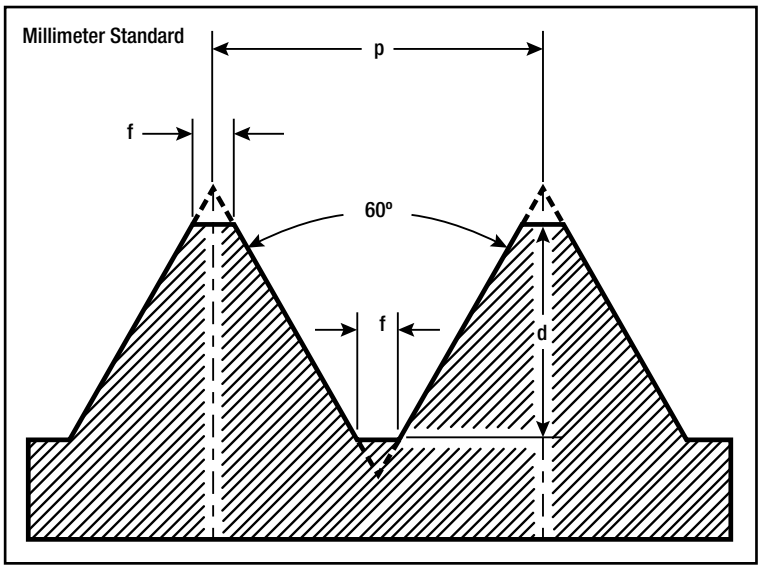

p = distance between any point on a thread to the corresponding point on the adjacent thread
d = depth – 0.64952P
f = flat – 0.125P

Designation	mm Diameter	mm Pitch
M2 x 0.4	2	0.4
M3 x 0.5	3	0.5
M4 x 0.7	4	0.7
M5 x 0.8	5	0.8
M6 x 1	6	1.0
M8 x 1.25	8	1.25
M10 x 1.5	10	1.5
M12 x 1.75	12	1.75
M16 x 2	16	2.0
M20 x 2.5	20	2.5
M24 x 3	24	3.0
M30 x 3.5	30	3.5

Thread Terminology

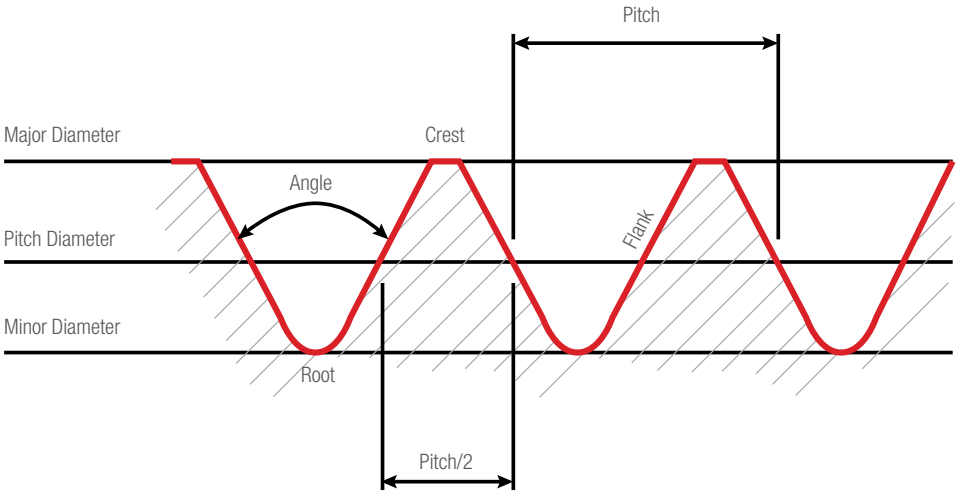

American Standard Acme Screw Thread Dimensions

h = Basic depth of thread
h' = Depth of thread with clearance
K = Tap drill
Basic minor diameter of nut
Fc = Width of flat at crest of thread
Fr = Width of flat at bottom of space
n = Number of threads per inch
p = Pitch of thread
Kr = Minor diameter of screw
D = Major diameter of screw
T = Major diameter of tap

FOR 10 OR FEWER THREADS PER INCH

$h' = \frac{P}{2}$ plus .010

$Fr = \frac{.3707}{n}$ minus .0052

T = D plus .020

FOR MORE THAN 10 THREADS PER INCH

$h' = \frac{P}{2}$ plus .005

$Fr = \frac{.3707}{n}$ minus .0026

T = D plus .010

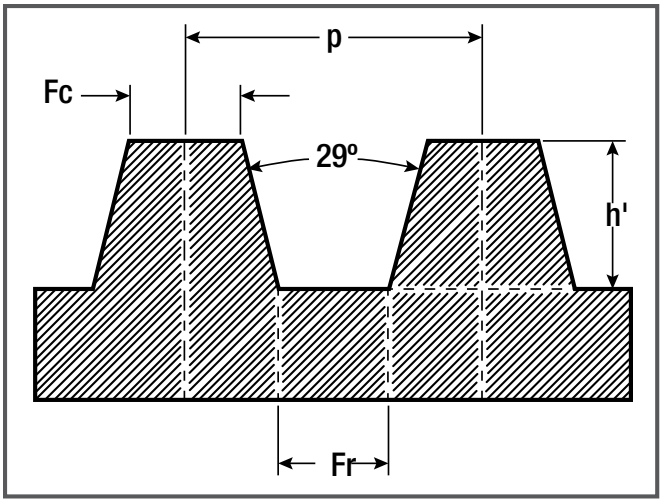

$p = \frac{1}{n}$ $Fc = \frac{.3707}{n}$

K = D minus p Kr = D minus 2h'

Threads per inch (n)	Depth of Thread with Clearance (h')	Flat at Top of Thread (Fc)	Flat at Bottom of Space (Fr)	Space at Top of Thread	Thickness at Root of Thread
1	.5100	.3707	.3655	.6293	.6345
1-1/3	.3850	.2780	.2728	.4720	.4772
2	.2600	.1854	.1802	.3146	.3198
3	.1767	.1236	.1184	.2097	.2149
4	.1350	.0927	.0875	.1573	.1625
5	.1100	.0741	.0689	.1259	.1311
6	.0933	.0618	.0566	.1049	.1101
7	.0814	.0530	.0478	.0899	.0951
8	.0725	.0463	.0411	.0787	.0839
9	.0655	.0412	.0360	.0699	.0751
10	.0600	.0371	.0319	.0629	.0681
12	.0467	.0309	.0283	.0524	.0550
14	.0407	.0265	.0239	.0449	.0475
16	.0363	.0232	.0206	.0393	.0419

Tapers and Angles

Taper per Foot	Degree	Included Angle Minute	Second	Degree	Angle With Center Line Minute	Second	Taper per inch	Taper per inch from Center Line
1/8"	0	35	49	0	17	54	.010417	.005208
1/4"	1	11	37	0	35	49	.020833	.010417
3/8"	1	47	25	0	53	43	.031250	.015625
1/2"	2	23	13	1	11	37	.041667	.020833
5/8"	2	59	1	1	29	30	.052083	.026042
3/4"	3	34	47	1	47	24	.062500	.031250
7/8"	4	10	33	2	5	17	.072917	.036458
1"	4	46	19	2	23	9	.083333	.041667
1-1/4"	5	57	47	2	58	53	.104167	.052084
1-1/2"	7	9	10	3	34	35	.125000	.062500
1-3/4"	8	20	27	4	10	14	.145833	.072917
2"	9	31	38	4	45	49	.166667	.083333
2-1/2"	11	53	37	5	56	49	.208333	.104167
3"	14	2	0	7	1	30	.250000	.125000
3-1/2"	16	35	39	8	17	50	.291667	.145833
4"	18	55	29	9	27	44	.333333	.166667
4-1/2"	21	14	22	10	37	11	.375000	.187500
5"	23	32	12	11	46	6	.416667	.208333
6"	28	4	21	14	2	10	.500000	.250000

Pitch Diameter Tables – American National Thread Form

FOR NOS. 575 AND 585 SCREW THREAD MICROMETERS

Number Sizes

Caliper Reading or Pitch Diameter = $D - \frac{.6495}{N}$

No.	Basic and Max. Outside Diameter	Threads Per Inch	Caliper Reading or Max. Pitch Diameter	Single Depth of Thread
	D	N	$D - \frac{.6495}{N}$	$\frac{.6495}{N}$
0	.060	80	.0519	.0081
1	.073	72	.0640	.0090
2	.086	64	.0759	.0101
3	.099	56	.0874	.0116
4	.112	48	.0985	.0135
5	.125	44	.1102	.0148
6	.138	40	.1218	.0162
7	.151	36	.1330	.0180
8	.164	36	.1460	.0180
9	.177	32	.1567	.0203
10	.190	30	.1684	.0217
12	.216	28	.1928	.0232
14	.242	24	.2149	.0271
16	.268	22	.2385	.0295
18	.294	20	.2615	.0325
20	.320	20	.2875	.0325
22	.346	18	.3099	.0361
24	.372	16	.3314	.0406
26	.398	16	.3574	.0406
28	.424	14	.3776	.0464
30	.450	14	.4036	.0464

Fractional Sizes

Caliper Reading or Pitch Diameter = $D - \frac{.6495}{N}$

Diameter (in)	Threads Per Inch	Caliper Reading of Pitch Diameter	Single Depth of Thread
D	N	$D - \frac{.6495}{N}$	$\frac{.6495}{N}$
Note: As there is no standard of diameter for the finer pitches, this column is left blank.	64	—	.0101
	62	—	.0105
	60	—	.0108
	58	—	.0112
	56	—	.0116
	54	—	.0120
	52	—	.0125
	50	—	.0130
	48	—	.0135
	46	—	.0141
	44	—	.0148
	42	—	.0155
	40	—	.0162
	38	—	.0171
	36	—	.0180
	34	—	.0191
	32	—	.0203
	30	—	.0217
	28	—	.0232
	26	—	.0250
	24	—	.0271
	22	—	.0295
1/4	20	.2175	.0325
5/16	18	.2764	.0361
3/8	16	.3344	.0406
7/16	14	.3911	.0464
1/2	13	.4501	.0499
9/16	12	.5084	.0541
5/8	11	.5660	.0590
3/4	10	.6851	.0649
7/8	9	.8029	.0721
1	8	.9188	.0812
1-1/8	7	1.0322	.0928
1-1/4	7	1.1572	.0928
1-3/8	6	1.2668	.1082
1-1/2	6	1.3918	.1082
1-5/8	5-1/2	1.5070	.1180
1-3/4	5	1.6201	.1299
1-7/8	5	1.7451	.1299
2	4-1/2	1.8557	.1443
2-1/2	4	2.3376	.1624
3	3-1/2	2.8145	.1855
3-1/2	3-1/4	3.3002	.1998
4	3	3.7835	.2165

Pitch Diameter Tables

FOR NOS. 575 AND 585 SCREW THREAD MICROMETERS

Whitworth Standard

Caliper Reading or Pitch Diameter for Whitworth Threads = $D - \frac{.640}{N}$

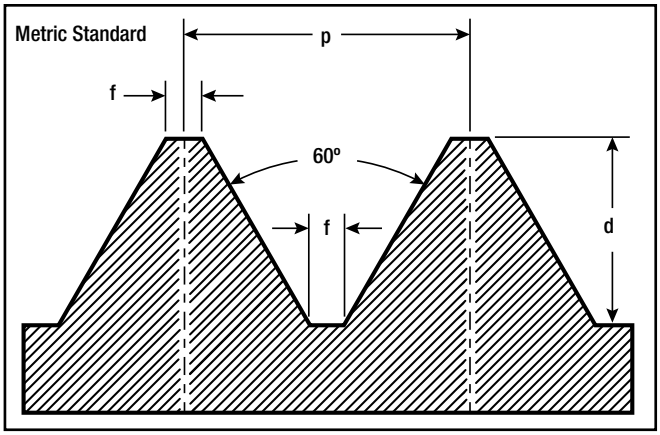

$p = \text{pitch} = \frac{1}{\text{No. thread per inch}}$

$d = \text{depth} = p \times .6495$

$f = \text{flat} = \frac{\text{pitch}}{8}$

Diameter (in)	Threads per Inch	Caliper Reading or Pitch Diameter	Single Depth of Thread
D	N	$D - \frac{.640}{N}$	$\frac{.640}{N}$
—	48	—	.0133
—	46	—	.0139
—	44	—	.0146
—	42	—	.0152
—	40	—	.0160
—	38	—	.0168
—	36	—	.0178
—	34	—	.0188
—	32	—	.0200
—	30	—	.0213
—	28	—	.0229
—	26	—	.0246
—	24	—	.0267
—	22	—	.0291
1/4	20	.2180	.0320
5/16	18	.2769	.0355
3/8	16	.3350	.0400
7/16	14	.3918	.0457
1/2	12	.4467	.0533
9/16	12	.5092	.0533
5/8	11	.5668	.0582
11/16	11	.6293	.0582
3/4	10	.6860	.0640
13/16	10	.7485	.0640
7/8	9	.8039	.0711
15/16	9	.8664	.0711
1	8	.9200	.0800
1-1/8	7	1.0336	.0914
1-1/4	7	1.1586	.0914
1-3/8	6	1.2684	.1066
1-1/2	6	1.3934	.1066
1-5/8	5	1.4970	.1280
1-3/4	5	1.6220	.1280
1-7/8	4-1/2	1.7328	.1422
2	4-1/2	1.8578	.1422
2-1/8	4-1/2	1.9828	.1422

Size (mm)	Pitch Intl. Std.	French Std.
2	.45	.50
3	.55	.50
4	.70	.75
5	.85	.75
6	1.00	1.00
7	1.00	1.00
8	1.25	1.00
9	1.25	1.00
10	1.50	1.50
11	1.50	—
12	1.75	1.50
14	2.00	2.00
16	2.00	2.00
18	2.50	2.50
20	2.50	2.50
22	2.50	2.50
24	3.00	3.00
26	—	3.00
27	3.00	—
28	—	3.00
30	3.50	3.50
32	—	3.50
33	3.50	3.50
34	—	3.50
36	4.00	4.00
38	—	4.00
39	4.00	—
40	—	4.00

Pitch Diameter Table

FOR NOS. 575 AND 585 SCREW THREAD MICROMETERS "V" STANDARD THREAD FORM

Caliper Reading or Pitch Diameter for "V" Threads = $D - \frac{.866}{N}$

Diameter (in)	Threads per Inch	Caliper Reading or Pitch Diameter	Single Depth of Thread	Diameter (in)*	Threads per Inch	Caliper Reading or Pitch Diameter	Single Depth of Thread
D	N	$D - \frac{.866}{N}$	$\frac{.866}{N}$	D	N	$D - \frac{.866}{N}$	$\frac{.866}{N}$
Note: As there is no standard of diameter for the finer pitches, this column is left blank.	64	—	.0135	1/4	24	.2139	.0361
	62	—	.0140	1/4	20	.2067	.0433
	60	—	.0144	5/16	20	.2692	.0433
	58	—	.0149	5/16	18	.2644	.0481
	56	—	.0155	3/8	18	.3269	.0481
	54	—	.0161	3/8	16	.3209	.0541
	52	—	.0167	7/16	16	.3834	.0541
	50	—	.0173	7/16	14	.3756	.0619
	48	—	.0180	1/2	14	.4381	.0619
	46	—	.0188	1/2	13	.4334	.0666
	44	—	.0197	1/2	12	.4278	.0722
	42	—	.0206	9/16	14	.5006	.0619
	40	—	.0217	9/16	12	.4903	.0722
	38	—	.0228	5/8	11	.5463	.0787
	36	—	.0241	5/8	10	.5384	.0866
	34	—	.0255	11/16	10	.6009	.0866
	32	—	.0271	3/4	10	.6634	.0866
	30	—	.0289	7/8	9	.7788	.0962
	28	—	.0309	1	8	.8918	.1082
	26	—	.0333	1-1/8	8	1.0168	.1082
	—	—	—	1-1/4	7	1.1263	.1237
	—	—	—	1-1/2	6	1.3557	.1443

* These figures give the outside diameter for screws with threads cut theoretically sharp. As it is not practical to make these threads sharp, the outside diameter will measure less than the figures given, the pitch diameter remaining the same.

American Standard Acme Screw Thread Dimensions

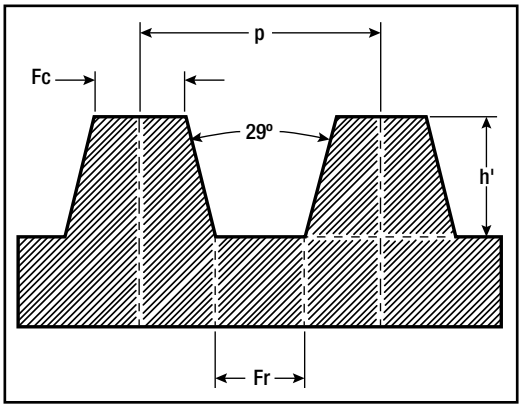

h = Basic depth of thread
h' = Depth of thread with clearance
K = Tap drill / Basic minor diameter of nut
Fc = Width of flat at crest of thread
Fr = Width of flat at bottom of space
n = Number of threads per inch
p = Pitch of thread
Kr = Minor diameter of screw
D = Major diameter of screw
T = Major diameter of tap

$p = \frac{1}{n}$ $Fc = \frac{.3707}{n}$

K = minus p Kr = D minus 2h'

FOR 10 OR FEWER THREADS PER INCH

$h' = \frac{P}{2}$ plus .010

$Fr = \frac{.3707}{n}$ minus .0052

T = D plus .020

FOR MORE THAN 10 THREADS PER INCH

$h' = \frac{P}{2}$ plus .005

$Fr = \frac{.3707}{n}$ minus .0026

T = D plus .010

Threads per inch (n)	Depth of Thread with Clearance (h')	Flat at Top of Thread (Fc)	Flat at Bottom of Space (Fr)	Space at Top of Thread	Thickness at Root of Thread
1	.5100	.3707	.3655	.6293	.6345
1-1/3	.3850	.2780	.2728	.4720	.4772
2	.2600	.1854	.1802	.3146	.3198
3	.1767	.1236	.1184	.2097	.2149
4	.1350	.0927	.0875	.1573	.1625
5	.1100	.0741	.0689	.1259	.1311
6	.0933	.0618	.0566	.1049	.1101
7	.0814	.0530	.0478	.0899	.0951
8	.0725	.0463	.0411	.0787	.0839
9	.0655	.0412	.0360	.0699	.0751
10	.0600	.0371	.0319	.0629	.0681
12	.0467	.0309	.0283	.0524	.0550
14	.0407	.0265	.0239	.0449	.0475
16	.0363	.0232	.0206	.0393	.0419

General Guide for Cutting Speeds and Feeds for Drills

The following information is a general guide. Specific jobs may need to be modified because of varying job conditions, such as coolant, equipment and job requirements.

Guide for Drill Feeds

Drill feeds are governed by the size of the drill and also the material to be drilled.

The lower feeds should be used when drilling relatively hard materials such as alloy steels. The higher feeds should be used when drilling relatively soft materials such as aluminum and brass.

These feeds are based on the peripheral speed of a drill.

Drill Dia.	Feed per Rev.	Drill Dia.	Feed per Rev.
Under 1/80	.0010 - .0020	Under 3mm	.025 - .05mm
1/80 - 1/40	.0020 - .0040	3 - 6mm	.05 - .100mm
1/40 - 1/20	.0040 - .0070	6 - 13mm	.100 - .180mm
1/20 - 10	.0070 - .0150	13 - 25mm	.180 - .370mm
Over 10	.0150 - .0250	Over 25mm	.370 - .630mm

Guide for Peripheral Speeds

Material	Feet/Minute Carbon Drill	Feet/Minute HSS Drill	Meters/Minute Carbon Drill	Meters/Minute HSS Drill
Machinery Steel	30	80	9	24
Cast Iron	35	100	10.5	30
Brass	60	200	18	60
Alloy Steel	–	50	–	15

Drill Diameter		Peripheral Speeds – Feet per Minute (Meters per Minute) Revolutions per Minute					
in	mm	30 (9)	50 (15)	60 (18)	80 (24)	100 (30)	200 (60)
1/8	3	917	1528	1833	2445	3056	6112
1/4	6	458	764	917	1222	1528	3056
1/2	13	229	382	458	611	764	1528
1	25	115	191	229	306	382	764
1-1/2	38	76	127	153	204	255	509
2	50	57	96	115	153	191	382
3	75	38	64	76	102	127	255

Standards for Sheet and Wire Gages with Corresponding Starrett Gages

Dimensions of Sizes in Decimal Parts of an Inch

Number of Wire Gage	281 American or Brown & Sharpe	188 245 Birmingham or Stubs' Iron Wire	287 Washburn & Moen, Worcester, MA	280 American S. & W. Co's. Music Wire Gage	Stubs' Steel Wire	283 U.S. Standard Gage for Sheet and Plate Iron and Steel
00000000	.731429					
0000000	.651356					
000000	.580049			.004		.46875
00000	.516549			.005		.4375
0000	.460000	.454	.3938	.006		.40625
000	.409642	.425	.3625	.007		.375
00	.364797	.380	.3310	.008		.34375
0	.324861	.340	.3065	.009		.3125
1	.289279	.300	.2830	.010	.227	.28125
2	.257626	.284	.2625	.011	.219	.265625
3	.229423	.259	.2437	.012	.212	.250
4	.204307	.238	.2253	.013	.207	.234375
5	.181941	.220	.2070	.014	.204	.21875
6	.162023	.203	.1920	.016	.201	.203125
7	.144285	.180	.1770	.018	.199	.1875
8	.128490	.165	.1620	.020	.197	.171875
9	.114424	.148	.1483	.022	.194	.15625
10	.101897	.134	.1350	.024	.191	.140625
11	.090742	.120	.1205	.026	.188	.125
12	.080808	.109	.1055	.029	.185	.109375
13	.071962	.095	.0915	.031	.182	.09375
14	.064084	.083	.0800	.033	.180	.078125
15	.057068	.072	.0720	.035	.178	.0703125
16	.050821	.065	.0625	.037	.175	.0625
17	.045257	.058	.0540	.039	.172	.05625
18	.040303	.049	.0475	.041	.168	.050
19	.035891	.042	.0410	.043	.164	.04375
20	.031961	.035	.0348	.045	.161	.0375
21	.028462	.032	.03175	.047	.157	.034375
22	.025347	.028	.0286	.049	.155	.03125
23	.022572	.025	.0258	.051	.153	.028125
24	.020101	.022	.0230	.055	.151	.025
25	.017900	.020	.0204	.059	.148	.021875
26	.015941	.018	.0181	.063	.146	.01875
27	.014196	.016	.0173	.067	.143	.0171875
28	.012641	.014	.0162	.071	.139	.015625
29	.011258	.013	.0150	.075	.134	.0140625
30	.010025	.012	.0140	.080	.127	.0125
31	.008928	.010	.0132	.085	.120	.0109375
32	.007950	.009	.0128	.090	.115	.01015625
33	.007080	.008	.0118	.095	.112	.009375
34	.006305	.007	.0104		.110	.00859375
35	.005615	.005	.0095		.108	.0078125
36	.005000	.004	.0090		.106	.00703125
37	.004453				.103	.006640625
38	.003965				.101	.00625
39	.003531				.099	
40	.003145				.097	

Temperature Conversions

This table shows conversions from degrees Fahrenheit (ºF) directly to degrees Celsius (ºC) and vice versa. It covers the range of temperatures used in most hardening, tempering and annealing operations.

Lower, higher and intermediate conversions can be made by substituting a known Fahrenheit (ºF) or Celsius (ºC) temperature figure in either of the following formulas:

$$^{\circ}F = \frac{^{\circ}C \times 9}{5} + 32 \qquad ^{\circ}C = \frac{^{\circ}F - 32}{9} \times 5$$

ºF	ºC
–160	–107
–140	–96
–120	–84
–100	–73
–80	–62
–60	–51
–40	–40
–20	–29
0	–18
20	–7
32	0
40	4
60	16
80	27
100	38
120	49
140	60
160	71

ºF	ºC
180	82
200	93
212	100
220	104
300	149
400	204
500	260
600	316
700	371
800	427
1000	538
1200	649
1400	760
1600	871
1800	982
2000	1093
2200	1204

High Temperatures Judged by Color

Degrees Centigrade	Degrees Fahrenheit	High Temperatures Judged by Color
400	752	Red heat, visible in the dark
525	975	Red heat, visible in daylight
700	1292	Dark red
900	1652	Cherry-red
1100	2012	Orange-red
1300	2372	Yellow-white
1500	2732	Brilliant white

Colors for Tempering

Degrees Centigrade	Degrees Fahrenheit	Colors for Tempering
221.1	430	Very pale yellow
237.8	460	Straw-yellow
254.4	490	Yellow-brown
260.0	500	Brown-yellow
271.1	520	Brown-purple
282.2	540	Full purple
293.3	560	Full blue

Rules Relative to the Circle

To Find Circumference

- Multiply diameter by 3.1416
- Or divide diameter by 0.3183

To Find Diameter

- Multiply circumference by 0.3183
- Or divide circumference by 3.1416

To Find Radius

- Multiply circumference by 0.15915
- Or divide circumference by 6.28318

To Find Side of an Inscribed Square

- Multiply diameter by 0.7071
- Or multiply circumference by 0.2251
- Or divide circumference by 4.4428

To Find Side of an Equal Square

- Multiply diameter by 0.8862
- Or divide diameter by 1.1284
- Or multiply circumference by 0.2821
- Or divide circumference by 3.545

Square

- A side multiplied by 1.4142 equals diameter of its circumscribing circle
- A side multiplied by 4.443 equals circumference of its circumscribing circle
- A side multiplied by 1.128 equals diameter of an equal side
- A side multiplied by 3.547 equals circumference of an equal circle

To Find the Area of a Circle

- Multiply circumference by one-quarter of the diameter
- Or multiply the square of diameter by 0.7854
- Or multiply the square of circumference by .07958
- Or multiply the square of 1/2 diameter by 3.1416

To Find the Surface of a Sphere or Globe

- Multiply the diameter by the circumference
- Or multiply the square of a diameter by 3.1416
- Or multiply four times the square of radius by 3.1416

Triangle Chart

FOR THE RAPID SOLUTION OF RIGHT-ANGLE AND OBLIQUE-ANGLE TRIANGLES

$C = \sqrt{A^2 - B^2}$

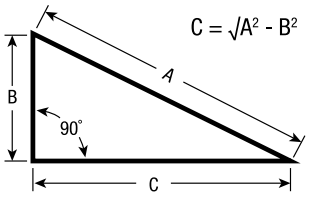

$\sin D = \frac{B}{A}$

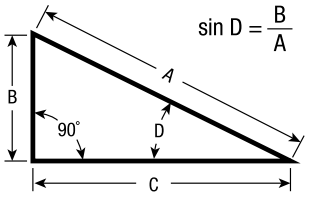

$E = 90^\circ - D$

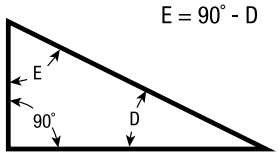

$B = \sqrt{A^2 - C^2}$

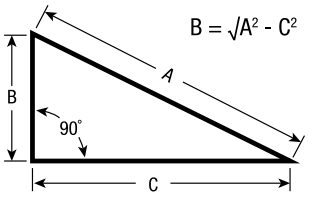

$\sin E = \frac{C}{A}$

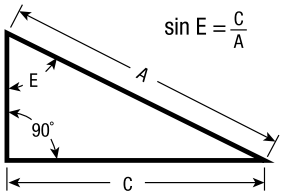

$D = 90^\circ - E$

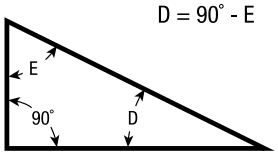

$A = \sqrt{B^2 + C^2}$

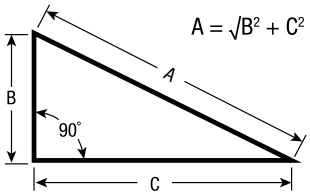

$\tan D = \frac{B}{C}$

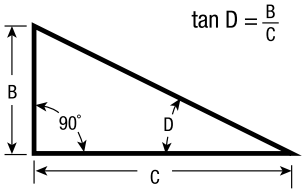

$B = A \times \sin D$

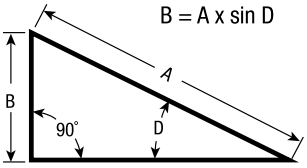

$C = A \times \cos D$

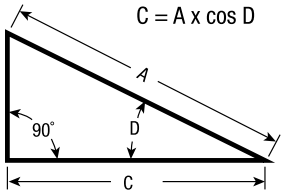

$B = A \times \cos E$

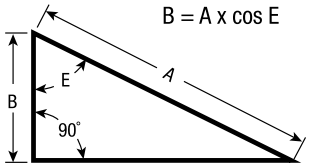

$C = A \times \sin E$

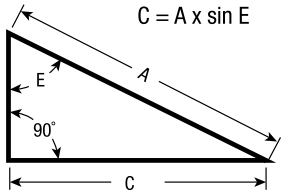

$A = \frac{B}{\sin D}$

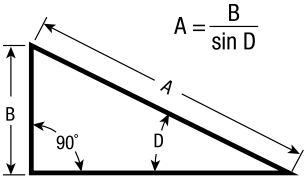

$C = B \times \cot D$

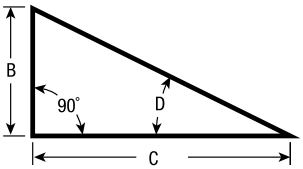

$A = \frac{B}{\cos E}$

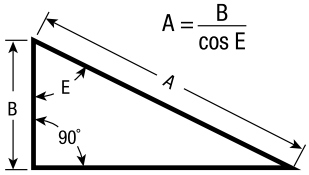

$C = B \times \tan E$

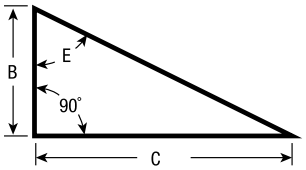

$A = \frac{C}{\cos D}$

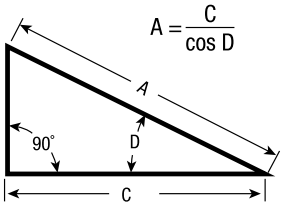

$B = C \times \tan D$

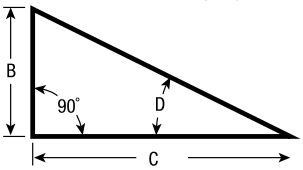

$A = \frac{C}{\sin E}$

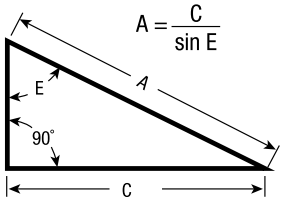

$B = C \times \cot E$

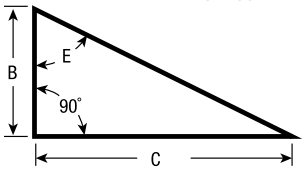

$B = \frac{A \times \sin F}{\sin D}$

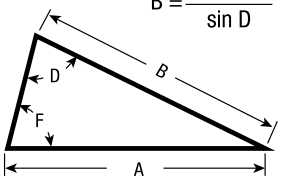

$E = 180^\circ - (D + F)$

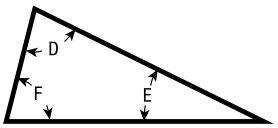

$C = \frac{A \times \sin E}{\sin D}$

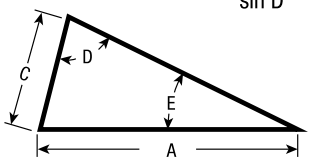

$\tan D = \frac{A \times \sin E}{B - A \times \cos E}$

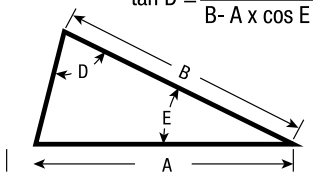

$F = 180^\circ - (D + E)$

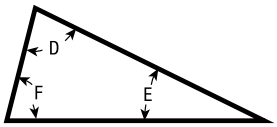

$\sin E = \frac{C \times \sin D}{A}$

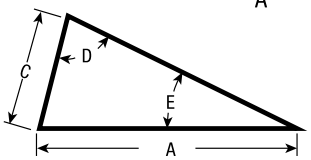

$\sin F = \frac{B \times \sin D}{A}$

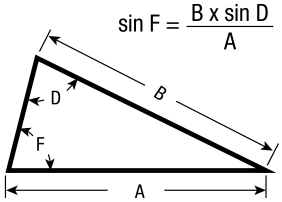

$A = \frac{C \times \sin D}{\sin E}$

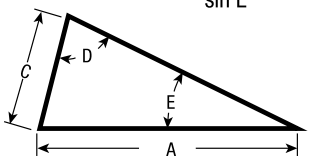

$\text{Area} = \frac{A \times B \sin E}{2}$

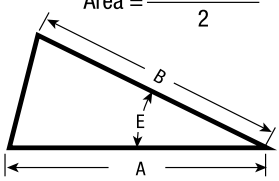

$\cos D = \frac{B^2 + C^2 - A^2}{2 \times B \times C}$

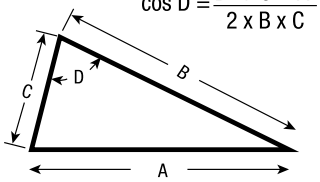

$A = \frac{B \times \sin D}{\sin F}$

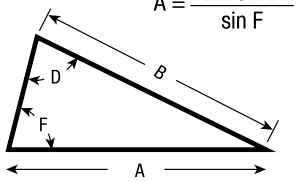

$\cot E = \frac{A \times \csc F}{C} - \cot F$

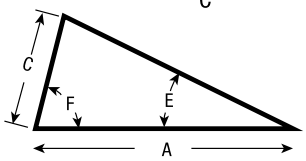

Starrett®

INDEX

A

Amplifiers
- Electronic Gage
  - Gage-Chek™ ... 234

B

Blocks
- Bench ... 348
- Gage ... 391
- Inspection ... 366
- Reverse Reading ... 119
- Riser ... 119
- Wear Blocks ... 383

Bore Gages ... 203–214
- AccuPlug ... 216–219
- Dial ... 213–215
- Electronic ... 204–208
  - AccuBore® ... 204–206
- Special Measuring Heads ... 212
- Vernier ... 209

C

Calibration, Accuracy/General Service Information 14–16

Calipers
- Firm-Joint ... 313–314
- Hermaphrodite ... 313–314
- Leg Type
  - Spring-Type, Round Legs ... 312
  - Spring-Type, "Yankee" Flat Legs ... 312
- Lock-Joint ... 313–314

Slide Calipers
- Carbon Fiber ... 92
- Center Distance Attachment ... 99
- Circumference ... 105
- Dial ... 96, 98–99
- Electronic ... 91
  - Groove ... 95
  - Long Jaw ... 94
- Pocket ... 105
- Vernier ... 100–104
  - Gear Tooth ... 104
  - Master ... 100
- Spring-Type ... 312
  - "Yankee" ... 312

Trammels ... 315–316

Center Finder/Wiggler ... 346

Clamps
- Shaft Alignment ... 194
- Toolmakers' Parallel ... 356
- Toolmakers' Steel ... 357

Collet Adaptor ... 137, 139, 347

Combination Squares ... 267–279
- Attachments ... 274
- Blades ... 272
- Heads ... 273
- Junior ... 276
- Large ... 275
- Student ... 275
- with Square & Center Heads ... 269–270
- with Square, Center & Non-reversible Protractor Heads ... 271

Cut Nippers ... 345

D

Data Collection Systems ... 223–230
- DataSure® Wireless Systems ... 224–228
- GageMux ... 229
- SmartCables ... 230
- Software
  - Wedge™ ... 229–230, 232

Depth Gages ... 123–131
- Attachment for Height Gages ... 119
- Bases ... 131–132
- Depth and Angle ... 129
- Dial ... 127, 130–132
- Electronic ... 124–126
- Protractor ... 309
- Steel Rule ... 128
- Vernier ... 128

Dividers
- Toolmakers' ... 312
- Yankee ... 312

Drill Rod **565–569**

E

Educational Materials **571–574**

G

Gage Amplifiers, Hardness & Surface Testers **231–249**
- Electronic Gage 232–236
- Hardness & Surface Testers 237–246
- Thickness Gages 248–249

Gages
- Acme Screw Thread 329
- Angle 129
- Angle and Depth 129
- Center 331
- Chamfer 185
- Combination Taper, Wire, Thickness 339
- Comparator Stands 184
- Countersink 186
- Crankshaft Distortion Dial/Strain 195
- Cylinder 196
- Dial
  - Comparator 184
  - Diameter 198–200
  - Groove 192
  - Inside 193
  - Inside Caliper 193
  - Outside Caliper 193
  - Pocket 189
  - Sheet 187
  - Snap 191
  - Thickness 190
  - Universal Back-Plunger 142
- Diameter
  - Set Master 201–202
- Diameter Gages and Masters 197–202
- Drill
  - Drill & Steel Wire 327–328
  - Jobbers' 327
  - Letter Size 327
  - Tap & Drill 327
- Electronic
  - Amplifier 236
  - Snap 189
- Engineers' Combination 339
- Fixed Gage Standards 325–340
  - Angle 331
- Holder 334
- Hole 187, 320–323
- Piano Tuners' 328
- Radius 330
- Scratch 344
- Screw Pitch 332–333
- Sets
  - Radius 334
  - Steel Pin 326
- Surface 342–343
- Surface, Universal Snugs 343
- Taper 323
- Telescoping 321–322
- Thickness 336–340
  - "Feeler" Stock 337–339
- U.S. Standard 328
- Wire 328
  - American Standard 328
  - American Steel & Wire Co. 328
  - English Standard 328

Ground Flat Stock **552–564**
- Air Hardening 556–560
- High Carbon 561–562
- Low Carbon 563–564
- Oil Hardening 552–555

H

Hammer, Toolmakers' **348**

Height Gages **107–121**
- Accessories 119–121
- Altissimo® 108–110
- Dial 116
- DIGI-CHEK™ 118
- DIGI-CHEK™ II 117
- Electronic 108–112
- Scribers 121
- Transfer Gage 120

Vernier 113–115
Master 114
Hold-Downs 356

I

Indicators 133–202
Attachments and Accessories 137, 139, 143, 164–167
Backs 163
Bases/Holders 175–184
Contact Points 165–166
Design Features 145
Dial
AGD 148
Accessories 167–168
Comparison Chart 148–149
General Information 144–145
Group 1 153–154
Group 2 155–156
Group 3 156
Group 4 ..... 157, 160
Sets 156
Specifications 144
Back Plunger 141–143
Comparator 162, 184
Long Range 158–160
Miniature 146
Nonshock Mechanism 164
Numbering and Line Styles 150–153
Shock Absorbing Anvil Unit 165
Special Function 185–200
Spindle Squares 188
Dial Test 135–140
Dovetail Mount 135–136
Last Word® 138
Swivel Head 136
Electronic 170–174
AGD Group 2 ..... 170, 174
Wisdom® 172
Holders 175–184, 176
Flex-O-Post 179
Inspection 183
Magnetic 177–178, 180
Heavy-Duty 181
Mini 181
Testers 169

J

Jack Screws 347

K

Kleenscribe™ Layout Dye 345

L

Laser Measurement 527–548
Profile360™
Apex Extrusion 543
Auto Seals 530
Extruded Window Profiles 531
Industrial Mobility Package 536
Pipe, OD, Out of Round and Length Measurement 534
Roll Forming 533
Software 537
Technical Specifications 536
Wire and Cable 535
Wood-Plastic Composite 532
Tire Industry
Bead-to-Bead 548
GEO-360 545
Green Tire Uniformity System 546
Off-Line Profilometer 541
Off-Line Profilometer 3D 540
Off-Line Profilometer SL 542
On-Line Profilometer 539
Tire360 544
Tread Wear Measurement System 547
Layout Dye 345
Levels
Machinists' 370–374
Bench 372, 374
Cross Test 373
Master Precision 370
Pocket 374
with ground and graduated vials 371
Lubricant 364
M1® All-Purpose 364–365
Tool & Instrument Oil 366

M

Machinists' Precision Shop Tools 341–366

Material Test and Force Measurement.....481–526

Accessories.....514–515

Applications 522–525

Automation 498–499

Load Cell Sensors.....512–513

Services.....526

Systems.....482–497

Test Frames 508–510

Metrology Equipment

Optical Comparators.....449–474

Horizontal Bench Optical Comparator.....450–453

Horizontal Floor Optical Comparators.....462–464

Horizontal Floor Standing Optical Comparator.....462–465

Side Bed Optical Comparators.....466–469

Vertical Bench Optical Comparators.....456–459

Vertical Floor Standing Optical Comparator 460–461

OV2™ Optical Comparator Video Adaptor.....470

Software

MetLogix™ 476–477

Quadra-Chek® 478–479

TOV2 Optical Comparator Telecentric Video Adapter.....471

Video Inspection Systems.....445–447

KineMic™ (KMR) 446–447

Vision Systems.....423–444

Automatic Vision Metrology Systems 428–435

Horizontal Digital Video Projector 438–441

Large Format Premier (LF) 436

Manual Vision Metrology Systems 424–427

Micrometers 19–87, 204, 260, 573

Attachments

Ball 57

Bench.....74–75

Calipers

Inside 82

Depth 83–87

Digital Outside.....27–28

Electronic.....25–26

Bench.....74

Blade-Type 52

Disc-Type 54

Multi-Anvil 44

Outside.....24–26

Rounded Anvil 56

Screw Thread Comparator 59

Sheet Metal 46

Tube.....47

Heads.....63–72

0-1"/0-25mm.....68

0-1"/0-25mm, Heavy Duty 70

0-1"/0-25mm, Non-Rotating 64

0-1/4".....66

0-1/2".....67

0-1/2"/0-13mm.....66

0-1/2", Non-Rotating Spindles 63

0-1/2", Stainless Steel 67

0-1/4"/0-6.5mm.....66

0-1", Digital.....69

0-1", Large, Super-Precision.....72

0-2"/0-50mm, Electronic 65

0-2", Electronic.....65

0-2", Large, Direct-Reading.....71

0-2", Long Range.....69

0-1".....68

Speeds Gaging.....42

Indicating.....73

Inside.....77–82

Combination Head with Inside Micrometer 78

End Measuring Rods 77–78

Heads & Rods to 107".....81

Heads & Solid-Rods to 32" 79

Heads & Tubular Rods to 40" 80

Internal Groove.....82

Internal Micrometers 79

Measuring Tips 77

Tubular 80–81

Measuring Rods 76

Mul-T Anvil.....43

Outside.....28–30, 33–36

Automotive Crankshaft 48

Automotive Disc Brake.....49

Blade-Type 51–52

Can Curl 61

Can Seam 61
Disc-Type 53–54
Groove 49
Hi-Precision 32
Hub 62
Insulated Frame 32
Interchangeable Anvil 37–39, 38
Paper Gage 50
Rounded Anvils 55–56
Screw Thread 58–59
Screw Thread Comparator 59
Sheet Metal 45–46
Special Function 42–64
Stainless Steel 30
Stand 41
Steel Mill 57
Tube 47
Tubular Bow Type 39–40, 40
Tubular Deep Throat 42
V-Anvil 60
Wire 60
Sets 27, 33, 36–37, 78, 81

P

Parallels
Steel 303
Precision Angle Plate 356
Precision Granite Products 409–422
Angle Plates 421
Cleaner 421
Covers 421
Cubes 420
Master Squares 419
Parallels 419
Planekator Kits 422
Repeat Reading Gage 422
Stands 417
Cabinet 417
Straight Edges 420
Surface Plates
Crystal Pink® 414
Superior Black 416
Toolmakers' Flats 418
Tri-Squares 418
V-Blocks 420
Precision Shop Tools 341–368
Adjustable-Jaw Cut Nippers 345
Protractors
Drill Point Gage 309
Non-Reversible Bevel 310
Reversible Bevel 310
Special Dial Heads 308
Steel 307–308
Universal Bevel 306, 308
Vernier Bevel 306
Punches 349–353
Automatic 349
Center 349–350
Drive Pin 352
Drive Pin, Brass 352
Drive Pin, Machine 353
Drive Pin, Machine, Brass 353
Hinge-Locating 349
Prick 351
Round Shank 350
Square-Head 351

R

Reference Tables 577–592
Rules 283–301
Accessories
Holder 301
Key Seat Clamps 300
Pocket Clip 285
English Pattern 299
Hook 285
Parallels 304
Steel 301–302
Decimal Equivalents 298
Draftsmen's 302
Folding, Circumference 299
General Utility 299
Letter & Number Drill Sizes 298

Precision 284–297
Shrink Graduations 297

S

Screwdrivers 354–355
Jewelers' 354
Pocket 355
Precision 354
Scribers
Adjustable Sleeve 344
Improved 344
Pocket 344
Slide Calipers 89–105
Electronic 90
Vernier 103
Small Hole Gages 320
Special Gaging 251–264
Squares 265–284
Diemakers' 281–282
Double 279–280
Heads
Cast Iron 268, 269
Center and Protractor 270
Hardened Steel 268–269
Master Precision 277
Toolmakers' Stainless Steel 278
Try 278
Straight Edges
Steel 302

T

Tachometer 367
Tap Wrenches 359
Testers
Hardness
Analog 237, 238
Compact 242
Digital 239, 247
Portable 243–245
Surface Roughness 245–246
TalyProfile 246
Thickness 248–249
Tool and Instrument Oil 366
Tool Sets 221–222
Automotive 222
Basic Precision 222

V

V-Blocks 360–362
Dual-Vee, Magnetic 361
Vises
Combination Hand 363
Pin 358
Double End 358
Tapered 358
Precision Grinding 357
Vocational & Educational 571–576

W

Webber Gage 375–408
Angle Gage Blocks 399–400
Calibration 406–407
Chamois 405
croblox® Reflecting Cubes 402–403
Indicator Accessory Set 389
Internal Measuring Machine Jaws 394
MicroAccurate® 382
Optical Flats 404
Polygons 404
Reference Bars 398–399
Steel Internal Measuring Machine Jaws 385
Stones 405
True Squares 401
Wear Blocks 389
Wiggler/Center Finder 346
Wireless Data Collection 228

1 Adjustable-Jaw Cut Nippers 345

M1® Industrial Quality All-Purpose Lubricant 364

2 Outside Micrometers 29

2A Outside Micrometers 29

L2 Plus Systems 86–489

L3 Systems 482–485

6 Screw Pitch Gage 332

8 Large Combination Squares 275

9 Combination Squares 271

9.MA1 Mini-Metric Rectangular Steel Gage Block Set 391

10 Student Combination Squares 275

11H Combination Squares 268

11HC Combination Squares 269

12 Non-reversible Bevel Protractors 310

13 Double Squares with hardened blades 279

14 Double Steel Squares 280

18 Automatic Center Punches 349

C19 Steel Protractor 307

20 Master Precision Squares 277

22C Drill Point Gage 309

25 Dial Indicators 148, 155

25 Dial Indicators, Long Range 158–159

25LC Range Limit Cap 167

25R Contact Point Set 166

25SC Split Collets 167

25W Roller Indicator Contact Point 166

26 Firm-Joint Calipers, Outside 314

27 Firm-Joint Calipers, Inside 314

28 Shock Absorbing Anvil 165

29 Scratch Gage 344

33HC Combination Squares 269

33H Forged and Hardened Steel Heads 268

33J Junior Combination Squares 276

36 Lock-Joint Transfer Calipers, Outside 314

37 Lock-Joint Transfer Calipers, Inside 314

38 Lock-Joint Calipers, Outside 314

39 Lock-Joint Calipers, Inside 314

47 Universal Bevel 308

50 Trammels 315

54 Hold-Downs 356

55 Master Precision Squares with Beveled Edges 277

56 Small Surface Gages 342

57 Full-sized Surface Gages 342

57S Universal Snugs 143, 343

58S Universal Snugs 143, 343

59 Trammels 315

61 "Reliable" Try Square 278

62 Rule Holder 301

63 Long Range Micrometer Heads 69

66 Thickness Gage 336–337

67 Improved Scriber 344

68 Adjustable Sleeve Scriber 344

70 Pocket Scribers 344

73 "Yankee" Inside Calipers 312

78XT Bore Gages 209–210

79 "Yankee" Outside Calipers 312

80 Miniature Dial Indicators 146

81 Dial Indicators 153–154

82 Dial Bore Gages 214

83 "Yankee" Dividers 312

84 Dial Bore Gages 215

85 Extension Dividers with Caliper Legs 316

86 Combination Hand Vise 363

91 Tap Wrenches 359

92 Carpenters' Dividers 316

93 T-Handle Tap Wrenches 359

98 Machinists' Levels 371

C100F Steel Rules 297

110 Gage Holder 334

117 Center Punches 350

119 Bench Blocks 348

120B Dial Calipers with Long Nib Jaws 99

120 Dial Calipers 96

120J Offset Dial Caliper 99

121 Long Range Tubular Inside Micrometer Sets 81

123 Master Vernier Calipers 100

124 Inside Micrometers 79

125 Vernier Calipers 103

128 Inside Micrometers 78

128 Micrometer Sets 78

129 Bench Blocks 348

130 Bench Level 374

132 Precision Bench Levels 372

134 Cross Test Level and Plumb 373

135 Pocket Levels 374

136 Cross Test Level 373

154 Adjustable Parallels 304

155 Screw Pitch Gage 332

156 International Metric Standard Screw Pitch Gages 333

159 International Metric Standard Screw Pitch Gages 333

SR160 Surface Roughness Tester 245

160 Toolmakers' Steel Clamps 357

161 Toolmakers' Parallel Clamps 356

162 Pin Vises 358

165 Double End Pin Vise 358

166 Pin Vises 358

167 Gage Holders 334

S167 Gage Holders 334

SD167 Gage Holders 334

170 Dial Sheet Gages 187

172 Thickness Gages 336–337

174 Tap Wrench 359

178 Fillet or Radius Gages 330

C182 Steel Protractor 307

C183 Steel Protractor 307

185 Time Saver® Tap and Drill Gage 327

186 Drill and Steel Wire Gage 327

187 Jobbers' Drill Gage - Hardened 327

188 English Standard Wire Gage 328

190 "Little Giant" Jack Screws 347

191 "Little Giant" Jack Screws 347

193 Steel Protractor 308

196 Universal Back-Plunger Dial Indicators 142

198 Standard Letter Size Drill Gage 327

199 Master Precision Level 370

207 Can Seam Outside Micrometers 61

208 Can Seam Outside Micrometers 61

209 Can Curl Micrometers 61

210 Screw Thread Comparator Outside Micrometers 59

211 Rounded Anvil Outside Micrometers 55

216 Digital Micrometers 27–28

220 Mul-T-Anvil Outside Micrometers 43

222 Sheet Metal Outside Micrometers 45

223 Paper Gage Outside Micrometers 50

224.1 Mechanical Interchangeable Anvil Micrometers 37

225 Wire Micrometers 60

226 Outside Micrometers 33

228 Hub Outside Micrometer 62

229 Telescoping Gages 321

230 Outside Micrometers 28

231 Outside Micrometers 32

232 Outside Micrometers 28

234 End Measuring Rods 76

236 Depth and Angle Gages 129

237 Steel Rule Depth Gages 128

240 Pin Vises 358

243 Hermaphrodite Calipers 313

245 Engineers' Taper, Wire and Thickness Gage 339

247 Micrometer Ball Attachments 57

248 Drive Pin Punches 353

C251 Trammels and Attachments 317

252 Height Transfer Gages 120

253 Dial Indicator Sets 156

254 Master Vernier Height Gages 114

255EM Vernier Height Gages 115

255 Vernier Height Gages 115

256 Disc-Type Outside Micrometers 53

257 Surface Gages 342

258 DIGI-CHEK™ Height Gages 118

258R Riser Blocks 119

258RRB Reverse Reading Blocks 119

260 Groove Outside Micrometers 49–50

261 Micrometer Heads 63

262 Micrometer Heads 64

263 Micrometer Heads 68

264 Center Punches 350

267 Taper Gage 323

268 V-Blocks and Clamp 360

269 Taper Gages 323

271 V-Blocks and Clamp 360

272 Fillet or Radius Gages 330

274 Toolmakers' Inside Calipers 312

275 Toolmakers' Outside Calipers 312

277 Toolmakers' Dividers 312

278 V-Blocks and Clamps 360

279 Fillet or Radius Gages 330

280 Piano Tuners' Gage 328

281 American Standard Wire Gage 328

283 U.S. Standard Gage 328

284 Acme Standard Screw Thread Gage - Hardened.....329

286 Drill and Steel Wire Gage 328

287 American Steel & Wire Co. Gage 328

289 Attachment for Combination Squares 274

298 Key Seat Clamps 300

299 Rule Clamp 300

SR300 Surface Roughness Tester..... 245

C303R Steel Rules 288

C303SR Steel Rules.....288, 290–291

C304R Steel Rules.....288, 290–291

C304SRE Steel Rules.....288, 290–291

C305R Steel Rules.....288, 290–291

C306R Steel Rules 288, 290

C309R Steel Rules 288

C310K Steel Rules with Pocket Clip..... 288

C310R Steel Rules 288, 290

C310T Tapered Steel Rules..... 288

C316R Steel Rules.....288, 290–291

C330 Steel Rules 294

C331 Steel Rules 296

C334 Steel Rules 296

C335S Steel Rules 294

344 A6 Air Hardening Flat Stock 559–560

359 Universal Bevel Protractors 306

363 Digital Micrometer Heads..... 69

C368 Steel Rules 297

C370 Steel Rules 297

C374 Steel Rules 297

C375 Steel Rules 297

C376 Steel Rules 297

C377 Steel Rules 297

C378 Steel Rules 297

380 Steel Straight Edges 302

384 Steel Parallels 303

385 Steel Straight Edges, Bevel Edge 302

386 Draftsmen's Steel Straight Edges with Bevel Edge.....302

387 Steel Straight Edges, Bevel and Graduated Edge.....302

C389 Steel Rules 297

C396 Center Gage 331

C398 Center Gage 331

SR400 Surface Roughness Tester..... 245

401 High Carbon, High Chromium Flat Stock 561

402 High Carbon, High Chromium Flat Stock 561–562

C404R Steel Rules 291–292

CH404R Steel Rules 291–292

414 Steel Rules, English Pattern 299

C416R Steel Rules 291–292

CH416R Steel Rules 291–292

423 Small Steel Rules with Holder..... 301

424 Stainless Steel Pocket Slide Calipers 105

430 Indicating Micrometer..... 73

434 Combination Squares 270

435 Square, Center and Protractor Head 270

436.1 Outside Micrometers 34–38

436 Automotive Crankshaft Outside Micrometers..... 48

439 Builders' Combination Tool 276
440 Depth Micrometers 86
443 Micrometer Depth Gages with Half Base 87
445 Depth Micrometers 86
446 Digital Micrometer Depth Gages 84
448 Vernier Depth Gages 128
449 Micrometer Depth Gages 85
450 Dial Depth Gages 127
452 Cylinder Gages 196
453 Diemakers' Squares 281
456 Gear Tooth Vernier Calipers 104
457 Diemakers' Square 282
458 Automotive Disc Brake Outside Micrometers 49
460B Micrometer Heads 66
460 Micrometer Heads 66
463 Micrometer Heads 67
464 Micrometer Heads 66
465 Micrometer Heads 71
466 Angle Gage 331
467 Thickness Gage 336
468 Micrometer Heads 71
469 Micrometer Heads 72
471 Steel Folding Rule, Circumference 299
472 Screw Pitch Gage 333
473 Screw Pitch Gage 333
474 Screw Pitch Gage 332
476 Screw Pitch Gage 333
476 Whitworth Standard Screw Pitch Gages 333
480 Oil Hardening Drill Rod, O1 565–566
481 Water Hardening Drill Rod, W1 567–568
483 V-Anvil Outside Micrometers 60
484 Screw Pitch Gage 332
485 V-Anvil Micrometers 60
486 Blade Type Outside Micrometers 51
490 Reversible Bevel Protractors 310
491 Reversible Bevel Protractors 310
C493B Protractor and Depth Gages 309
C493 Protractor and Depth Gages 309
493 Protractor and Depth Gages 309
495 Oil Hardening Flat Stock 552, 555
496 Oil Hardening Flat Stock 552–554
497 Air Hardening Flat Stock 556–557
498 Low Carbon Flat Stock 563–564
499 Air Hardening Flat Stock 556, 558
551 Precision Screwdrivers 354
553 Pocket Screwdrivers 355
555 Jewelers' Screwdrivers 354
563 Firm-Joint Hermaphrodite Calipers 313
565 Drive Pin Punches 352
566 Dual-Vee Magnetic V-Block 361
567 V-Block and Clamp 362
568 V-Blocks and Clamps 361
569 Tube Outside Micrometers 47
572 Thickness Gage 336
575 Screw Thread Outside Micrometers 58
576 Rounded Anvil Outside Micrometers 55

577 Rounded Anvil Outside Micrometers 55

578 V-Block and Clamp for Larger Capacity Work 362

579 Telescoping Gages 322

580 Precision Angle Plate 356

581 Precision Grinding Vise 357

585 Screw Thread Outside Micrometers 58

C601 Steel Rules 289–290

604R Steel Rules 289–290

C604R Steel Rules 288–292

CD604R Steel Rules 289–290

CH604R Steel Rules 289–292

DH604R Steel Rules 289–290

C604RE Steel Rules 289–290

H604R Steel Rules 289–290

C606R Steel Rules 289–290

C607R Steel Rules 289–292

610N Steel Rules 289–290

C610N Steel Rules 289–290

CH610N Steel Rules 289

H610N Steel Rules 289–290

611N Steel Rules 289

C616R Steel Rules 289–290

C622R-6 Steel Rule, Decimal Equivalents..... 298

C635 Steel Rules 294

C635E Steel Rules 294

635N Steel Rules 294

C636EM Steel Rules 296

C636ME Steel Rules 296

C637 Steel Rules 294

C637E Steel Rules 294

640 Dial Depth Gages 130

642 Top Reading Dial Depth Gages 132

643 Dial Depth Gage 130

644 Dial Depth Gages 131

647 Dial Comparator Indicators..... 162

648 Depth Gage Bases..... 131

648 Depth Gage Bases with Stem Collet..... 167

649 Spindle Squares 188

650 Back-Plunger Dial Indicators 141

651 Back Plunger Dial Indicators 141

653 Dial Comparators 184

653G Dial Comparators 184

655 Dial Indicators 148, 156

655 Dial Indicators, Long Range..... 158–159

656 Dial Indicators 148, 157

656 Dial Indicators, Extra Long Range 160

656 Dial Indicators, Long Range..... 158

657-1 Magnetic Base Universal Indicator Holder 180

657-2 Magnetic Base Universal Indicator Holder 180

657AA Magnetic Base Indicator Holder..... 177

657A Magnetic Base Indicator Holder..... 178

657 Indicator Holders 176

657T Flex-O-Post Indicator Holders..... 179

659 Heavy-Duty Magnetic Base Indicator Holder 181

660 Magnetic Base Indicator Holder..... 180

661 Mini Magnetic Indicator Holder..... 181

663 Heavy Duty Micrometer Heads 70
665 Inspection Holder and Dial Indicators 183
666 Thickness Gages/"Feeler" Stock..... 337
667 Thickness Gages/"Feeler" Stock..... 338
668 Shaft Alignment Clamp Sets..... 194
670 Indicator Hole Attachment..... 164
671 Universal Attachment..... 164
673 Bench Micrometers 75
675 Dial Comparators 184
683 Internal Chamfer Gages 185
684 Internal Chamfer Gages 185
685 External Chamfer Gages 185
686 External Chamfer Gages 185
687 Countersink Gages, 82º 186
688 Countersink Gages, 90º 186
689 Countersink Gages, 100º 186
696 Crankshaft Distortion Dial/Strain Gage 195
697 Inside Dial Gages 193
700 Inside Micrometer Calipers 82
701 Internal Groove Micrometers 82
706 Inspection Blocks 366
707 Steel Internal Measuring Machine Jaws..... 385
708 Dial Test Indicators with dovetail mounts..... 135
709 Dial Test Indicators with dovetail mounts..... 135
711 Last Word® Dial Test Indicators..... 138
714 Electronic Interchangeable Anvil Outside Micrometers.....38
715 Electronic Gage Amplifier Gage Heads 236
716 Indicator Testers..... 169
717 Electronic Gage Amplifier..... 232
724 Tubular Outside Micrometers 39
725 Deep Throat Tubular Micrometer 42
733 Electronic Micrometers (w/ output) 26
736 Tubular Outside Micrometers 40
749 Electronic Micrometer Depth Gage 83
756 Electronic Disc-Type Micrometers..... 54
760 Electronic Screw Thread Comparator Micrometer 59
762 Micrometer Heads..... 65
764 Electronic Sheet Metal Micrometers 46
765A Electronic Snap Gage 189
S766 Basic Electronic Tool Sets 222
769 Electronic Tube Micrometers 47
770BXT Electronic Internal Micrometers..... 207–208
776 Gage-Chek™ 234
777 Electronic Bench Micrometers..... 74
781BXT AccuBore® Electronic Bore Gages 204–206
786 Electronic Blade-Type Outside Micrometers 52
788 Rounded Anvil Outside Micrometers 56
790 Electronic Multi-Anvil Outside Micrometers 44
795.1 Electronic Micrometers (w/ output) 24
796.1 Electronic Micrometers..... 24
798 Electronic Calipers..... 90
800 Square-Head Nail Sets 351
806D Thickness Gage or "Feeler" Stock Holders 339
806 Thickness Gage Holders 339
811 Dial Test Indicators with swivel head..... 136
815 Toolmakers' Hammer 348

816 Prick Punches 351

818 Automatic Center Punch with Adjustable Stroke 349

819 Automatic Center Punches 349

823 Tubular Inside Micrometers 80

824 Inside Micrometers 81

827 Edge Finders 346

828 Wiggler/Center Finder 346

829 Small Hole Gages 320

830 Small Hole Gages 320

831 Small Hole Gages 320

S909 Basic Precision Measuring Tool Sets 222

1010 Dial Indicator Pocket Gages 189

1015 Portable Dial Thickness Gages 190

1017 Outside Dial Caliper Gages 193

1019 Internal Dial Caliper Gages 193

1025 Stainless Steel Pocket Slide Calipers 105

1100 Heavy-Duty Dial Indicator Diameter Gages 200

1101 Dial Indicator Diameter Gages 199

1102 Dial Indicator Diameter Gages 198

1126 Setting Masters for 1100, 1101 Diameter Gages 202

1127 Setting Master for 1102 Diameter Gages 201

1150 Dial Indicator Snap Gages 191

1175 Dial Indicator Groove Gages 192

1202F Fractional Dial Calipers 98

1212 Stainless Steel Outside Micrometers 30

1213 Precision Tool Poster 573

1230 Stainless Steel Outside Micrometers 30

1263 Stainless Steel Micrometer Heads 68

1309R Steel Rules 288

1317 Decimal Equivalents Card 575

1318 Metric Equivalents Card 575

1463 Micrometer Heads 67

1604R Steel Rules 289–290

1610 Kleenscribe™ Layout Dye 345

1612 Rule Case 289

1620 Tool and Instrument Oil 366

1634 Rule Case 289

1700 The Starrett Book for Student Machinists 576

1702 Wall Size Educational Charts 576

2000 Altissimo® Electronic Height Gages 108

2700 Backlight Electronic Indicators 171

2700 Wisdom® Electronic Indicators 172

2900 Electronic Indicators 170

3020 Toolmakers' Grade Stainless Steel Squares 278

3089 Dial Bore Gages 213

3202 Dial Calipers 98

3206 Outside Micrometer Stand 41

3250 Dial Height Gage 116

3259-AC Digital Height Gage Scriber Carrier Holder 121

3600 Electronic Indicators 174

3671 Indicator Stand 175

3672 Indicator Stand 175

3673 Indicator Stand 175

3732 Electronic Micrometers 25

3751 Electronic Height Gage 111

3753A Electronic Depth Gages 125

3753B Electronic Depth Gages 126
3754 Electronic Height Gages 112
3805 Electronic Durometer 247
3808 Dial Test Indicators 140
3809 Dial Test Indicators 140
3810A Digital Portable Hardness Tester 243
3811 Portable Hardness Tester 242
3812 Ultrasonic Thickness Gage 248
3813 Coating Thickness Gage 249
3814 Analog Bench Hardness Tester 237
3815 Twin Analog Bench Hardness Tester 238
3816 Digital Bench Motorized Hardness Tester 239
3908 Dial Test Indicators 140
3909 Dial Test Indicators 140
S4000 Pin Gages 326
5000 Carbon Fiber Calipers 92
5001 Carbon Fiber Calipers 92
5002 Carbon Fiber Calipers 92
5004 Electronic Depth Gages 124
5005 Electronic Long Jaw Calipers 94
5006 Electronic Groove Calipers 95
7612 4-Port GageMux USB 229
7613 4-Port GageMux USB 229
S7793Z Digital Tachometer 367
A2 482 Air Hardening Drill Rod, A2 569
AV300 Automatic Vision Metrology System 428–429
AV300+ Automatic Vision Metrology System 432–433
AV350 Automatic Vision Metrology System 428–429
AV350+ Automatic Vision Metrology System 434–435
AVR200 Automatic Vision Metrology System 430–431
AVR300 Automatic Vision Metrology System 430–431
B248 Brass Drive Pin Punches 353
B565 Brass Drive Pin Punches 352
C391 Center Gage 331
C623R-6 Steel Rule with Letter and Number Drill Sizes 298
D1 Inspection Software 480
EC799 Electronic Calipers 91
FLC Load Cell Sensor 513
HB400 Horizontal Bench Optical Comparator 452–453
HD400 Horizontal Bench-Top Optical Comparator 454–455
HDV300 Horizontal Digital Video Comparator 438–439
HDV400 Horizontal Digital Video Comparator 438–439
HE400 Horizontal Bench Optical Comparator 450–451
HF600 Horizontal Floor Standing Optical Comparator 462–463
HF750 Horizontal Floor Optical Comparator 464–465
HS600 Side Bed Optical Comparator 466–467
HS750 Side Bed Optical Comparator 468–469
L2 Material Testing & Force Measurement System 490–493
M1 MetLogix™ 476
M3 MetLogix™ 477
MV300 Manual Vision Metrology System 424–425
MVR200 Manual Vision Metrology System 426–427
MVR300 Manual Vision Metrology System 426–427
QC100 Quadra-Chek® 478
QC200 Quadra-Chek® 478
QC5200 Quadra-Chek® 479

QC5300 Quadra-Chek® 479

S2 Material Testing & Force Measurement System 494–497

S216 Digital Micrometer Set 27

S226 Micrometer Sets..... 33

S436.1 Micrometer Sets with Standards..... 36–37

S898Z Automotive Inspection Sets 222

T444 Outside Micrometer..... 31

ULC Load Cell Sensor 512

VB300 Vertical Bench Optical Comparator 456–457

VB400 Vertical Bench Optical Comparator 458–459

VF600 Vertical Floor Standing Optical Comparator 460–461

Contact Information Guide for North America

COMPLETE, UP-TO-DATE CONTACT INFORMATION AVAILABLE AT STARRETT.COM

Primary Contacts, Sales and General Information

- **World Headquarters and Precision Tools**:
  Athol, MA, (978) 249-3551
- **Metrology Equipment**:
  Laguna Hills, CA, (949) 348-1213
- **Laser Measurement**:
  Columbus, GA, (706) 323-5142
- **Granite Surface Plates and Accessories**:
  Waite Park, MN, (320) 251-7171
- **Gage Blocks**:
  Cleveland, OH, (440) 835-0001
- **Mexico**:
  Saltillo, Coah, Mexico, (844) 432-4660

Calibration

- **Precision Tools and Gages**:
  Athol, MA, (978) 249-3551
- **Starrett Calibration Services**:
  Duncan, SC, (864) 433-8407
- **Metrology Equipment**:
  Laguna Hills, CA, (949) 348-1213
- **Granite Surface Plates and Accessories**:
  Waite Park, MN, (320) 251-7171
- **Gage Blocks:**
  Cleveland, OH, (440) 835-0001
- In Mexico, please call (844) 432-4660

Repair

- **Precision Tools and Gages**:
  Athol, MA, (978) 249-3551
- **Metrology Equipment:**
  Laguna Hills, CA, (949) 348-1213
- **Granite Surface Plates and Accessories**:
  Waite Park, MN, (320) 251-7171
- **Gage Blocks**:
  Cleveland, OH, (440) 835-0001
- In Mexico, please call (844) 432-46-60

Custom Solution Development

- **Special Tools and Gages**:
  Athol, MA, (978) 249-3551
- **Metrology System Development and Configuration**:
  Laguna Hills, (949) 348-1213
- **Granite Based Custom Products**:
- Waite Park, MN, (320) 251-7171
- In Mexico, please call (844) 432-4660

Additional and/or Up-To-Date Information

- starrett.com
- Product Literature and Educational Materials:
  Select the "Catalogs" button at starrett.com to order printed product information and to access literature PDFs for viewing and/or downloading
- In Mexico, please call (844) 432-4660

Corporate Headquarters and Main Factory

THE L.S. STARRETT COMPANY
121 Crescent Street
Athol, MA 01331-1915 - U.S.A.

Tel: (978) 249-3551
Main Fax: (978) 249-8495

International Locations

BRAZIL
Starrett Indústria e Comércio Ltda.
Av. Laroy S. Starrett 1880 - Bairro Pinheirinho
Caixa Postal 171
13306-900 Itu, São Paulo - Brazil

Tel: 55 11 2118-8200
Fax: 55 11 2118-8003

SCOTLAND
The L.S. Starrett Company Ltd.
Jedburgh TD8 6LR - Scotland

Tel: 44 (0) 1835 863501
Fax: 44 (0) 1835 863018

CHINA
Starrett Tools (Suzhou) Company Limited
Suzhou Industrial Park
No. 339. Su Hong Zhong Road
Suzhou, Jiangsu Province
P.R. China 215021

Tel: 86 512 6741940
Fax: 86 512 67415697

How to Order

For prompt delivery, technical support and assistance, contact your nearest industrial distributor.

Product Demonstration

All Starrett manufacturing and branch locations and many distributors can demonstrate an array of Starrett products at work. Contact your local distributor to learn more.

STARRETT PRODUCT LINES

- Band Saw Blades
- Force Measurement
- Jobsite & Workshop Tools
- Laser Measurement
- Metrology Equipment
- Precision Granite
- Precision Ground Solutions
- Precision Measuring Tools
- PTA & Hand Tools
- Service
- Webber Gage Blocks

Follow us!

starrett.com

Phone: (978) 249-3551 | Fax: (978) 249-8495
121 Crescent Street-Athol, MA 01331-1915-USA

Catalog 33 Precision Tools 09/17 30M/Q The L.S. Starrett Company 2014© Specifications subject to change.